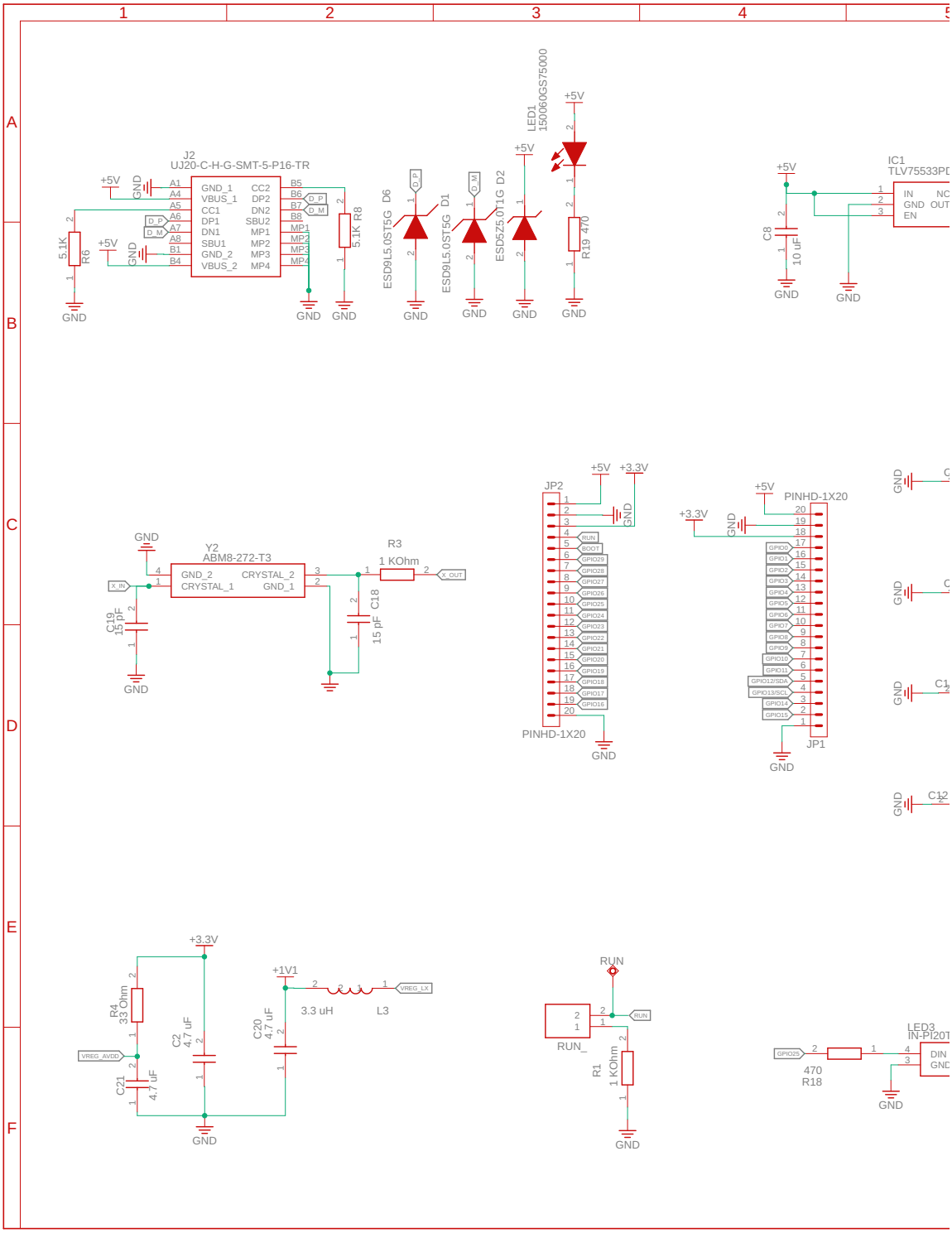
J2
UJ20-C-H-G-SMT-5-P16-TR
GND_1 CC2
VBUS_1 DP2
CC1 DN2
DP1 SBU2
DN1 MP1
SBU1 MP2
GND_2 MP3
VBUS_2 MP4
A1 A4 A5 A6 A7 A8 B1 B4
B5 B6 B7 B8 MP1 MP2 MP3 MP4
D_P
D_M
+5V
GND
5.1K R6
5.1K R8
ESD9L5.0ST5G D6
ESD9L5.0ST5G D1
ESD5Z5.0T1G D2
LED1 150060GS75000
R19 470
IC1 TLV75533PD
IN NC
GND OUT
EN
C8 10 uF
Y2 ABM8-272-T3
GND_2 CRYSTAL_2
CRYSTAL_1 GND_1
X_IN
X_OUT
R3 1 KOhm
C19 15 pF
C18 15 pF
JP2
PINHD-1X20
+3.3V
JP1
R4 33 Ohm
VREG_AVDD
C21 4.7 uF
C2 4.7 uF
C20 4.7 uF
+1V1
3.3 uH
L3
VREG_LX
RUN
RUN_
R1 1 KOhm
LED3 IN-PI207
GPIO25
470 R18
DIN
GND

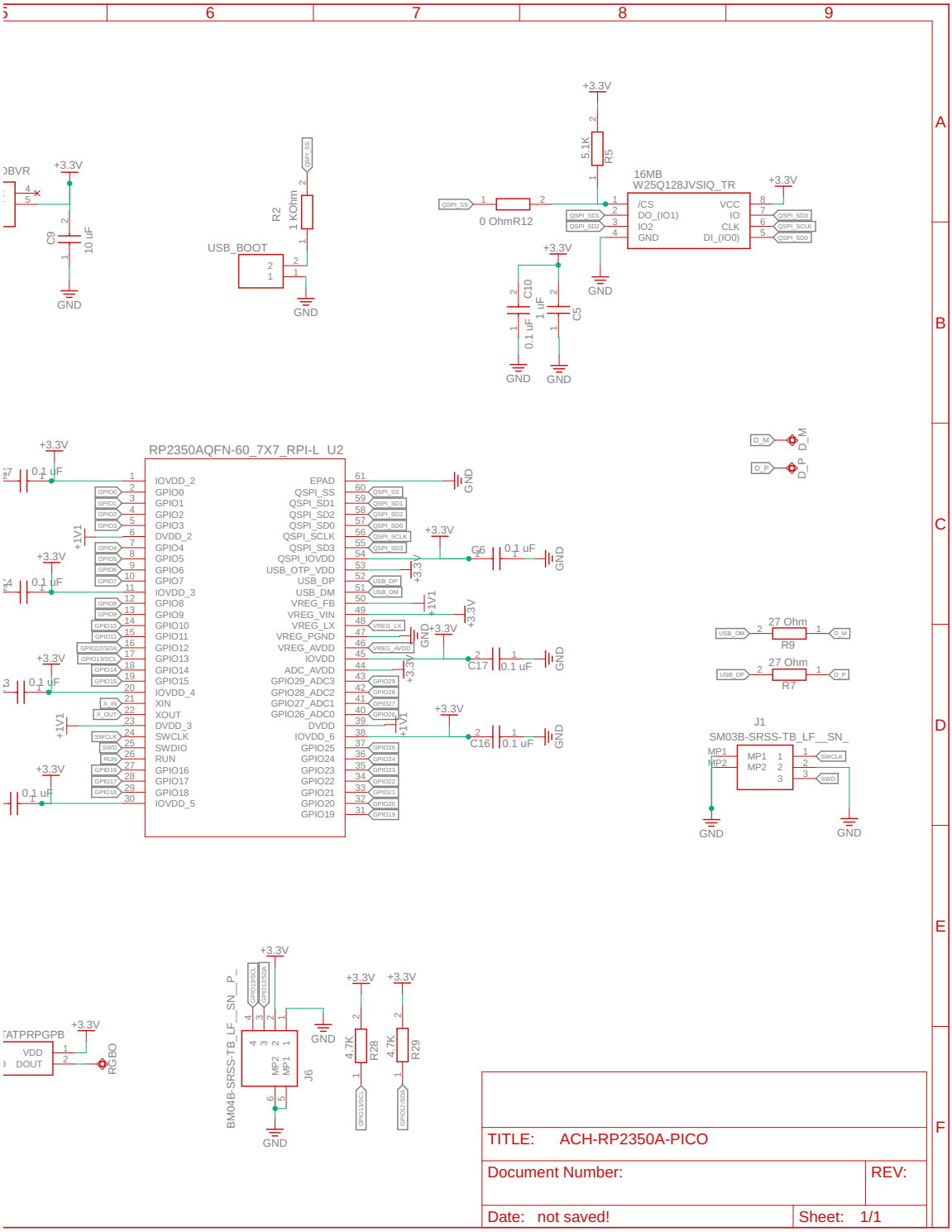
RP2350AQFN-60_7X7_RPI-L_U2
16MB
W25Q128JVSIQ_TR
0 OhmR12
5.1K
R5
R2
1 KOhm
USB_BOOT
C9
10 uF
C10
0.1 uF
C5
1 uF
C6
C17
C16
R9
27 Ohm
R7
J1
SM03B-SRSS-TB_LF__SN_
BM04B-SRSS-TB_LF__SN__P_
J6
R28
4.7K
R29
RGBO
+3.3V
+1V1
GND
TITLE: ACH-RP2350A-PICO
Document Number:
REV:
Date: not saved!
Sheet: 1/1