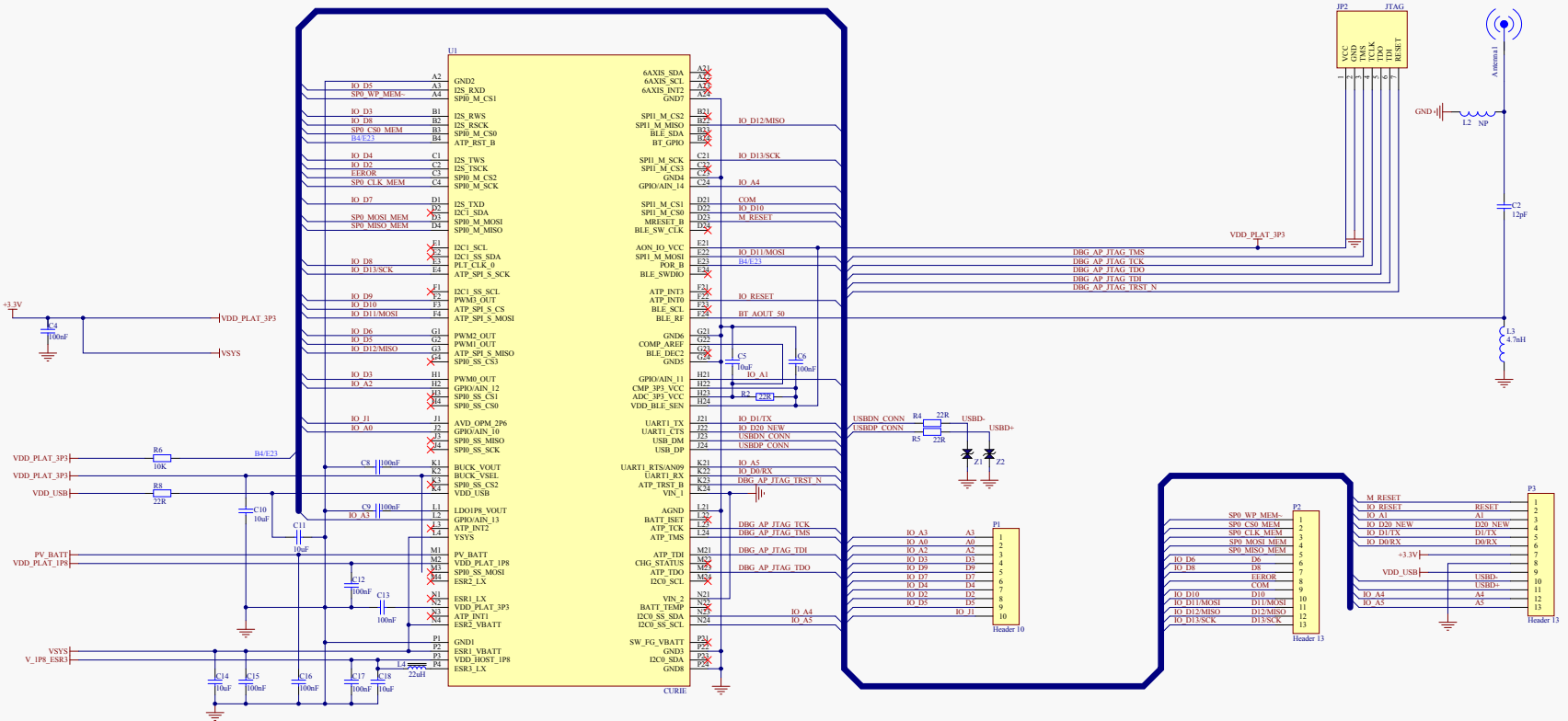

Title: *Curie Core*			SKU: TEL0110
Drawn: lg.gang-CD	Revision: V1.0		Size: A2
Page: 1 of 1	Date: 2017/2/22		Time: 1:34:36