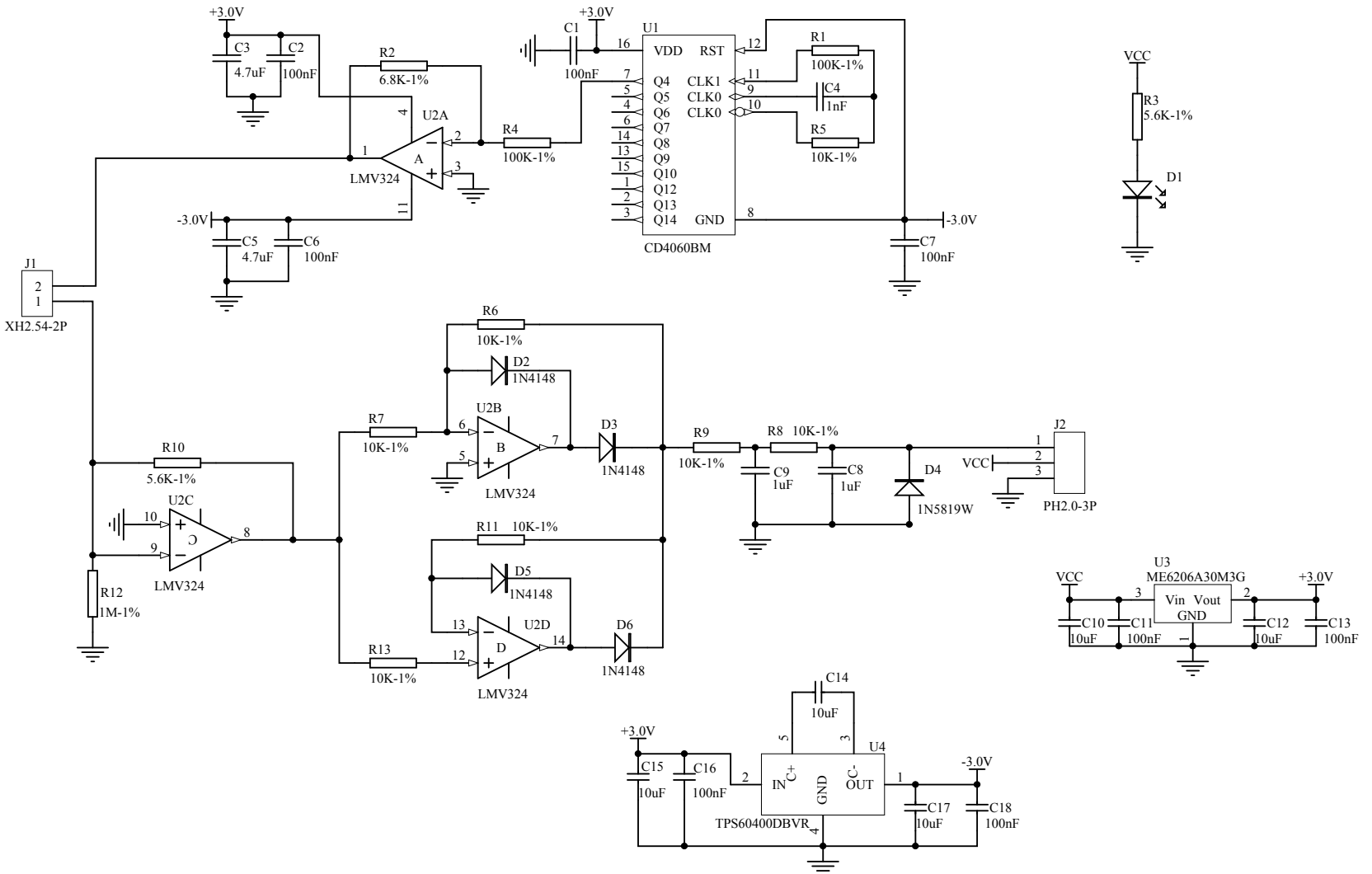

Title: *Analog TDS Sensor\Meter For Arduino*			SKU: ***SEN0244***
Drawn: ***DongZi-CD***	Revision: ***V1.0***		Size: ***A4***
Page: ***1 of 1***	Date: *2017/9/6*		Time: ***16:32:58***