Build the robot!

ROBORISE-IT!
ROBOTIC EDUCATION

0

20

ROBORISE-IT!
ROBOTIC EDUCATION

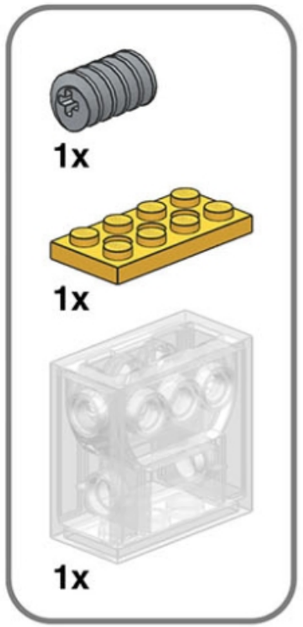

1

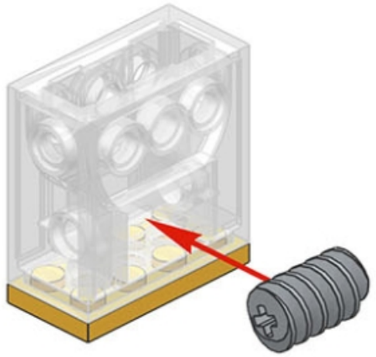

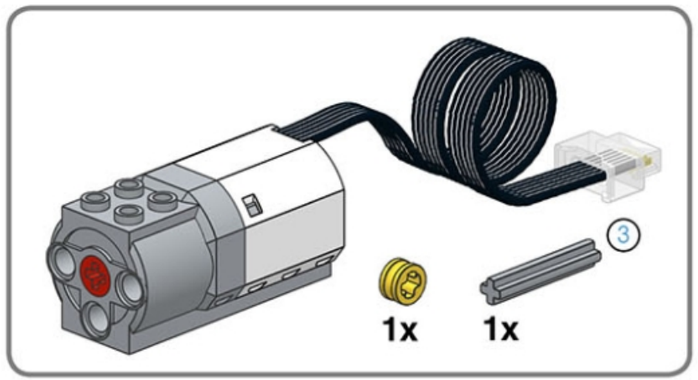

2

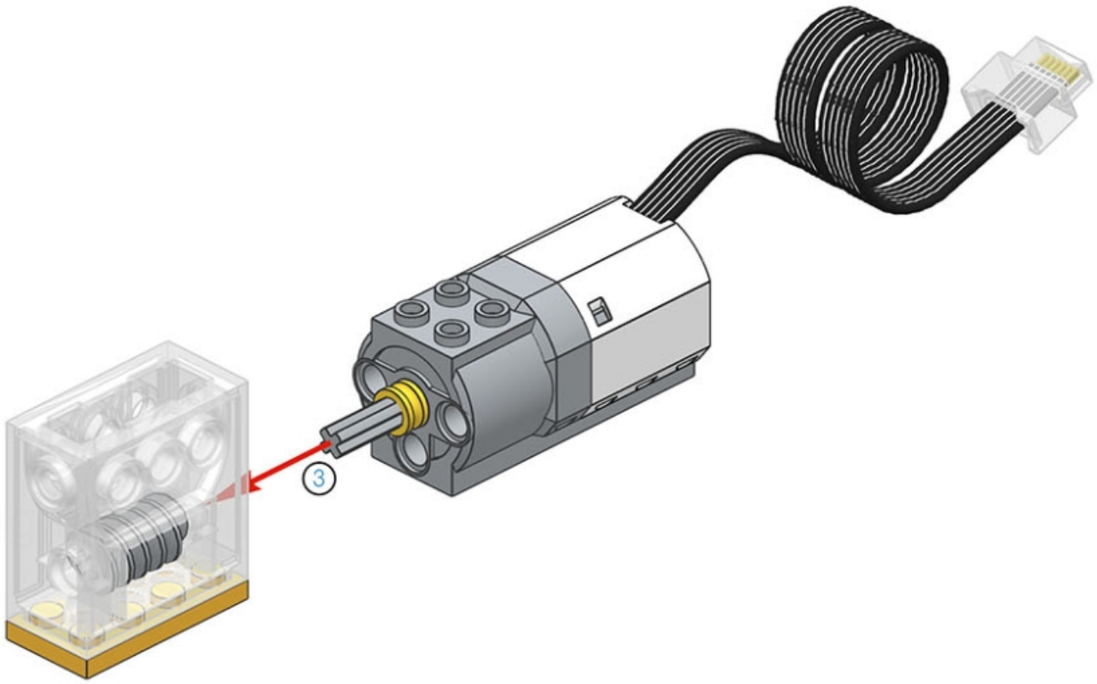

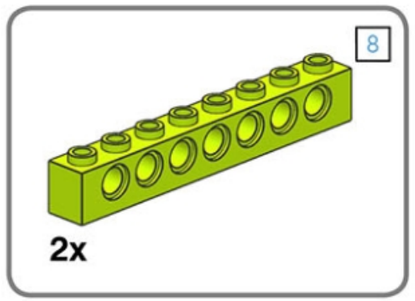

3

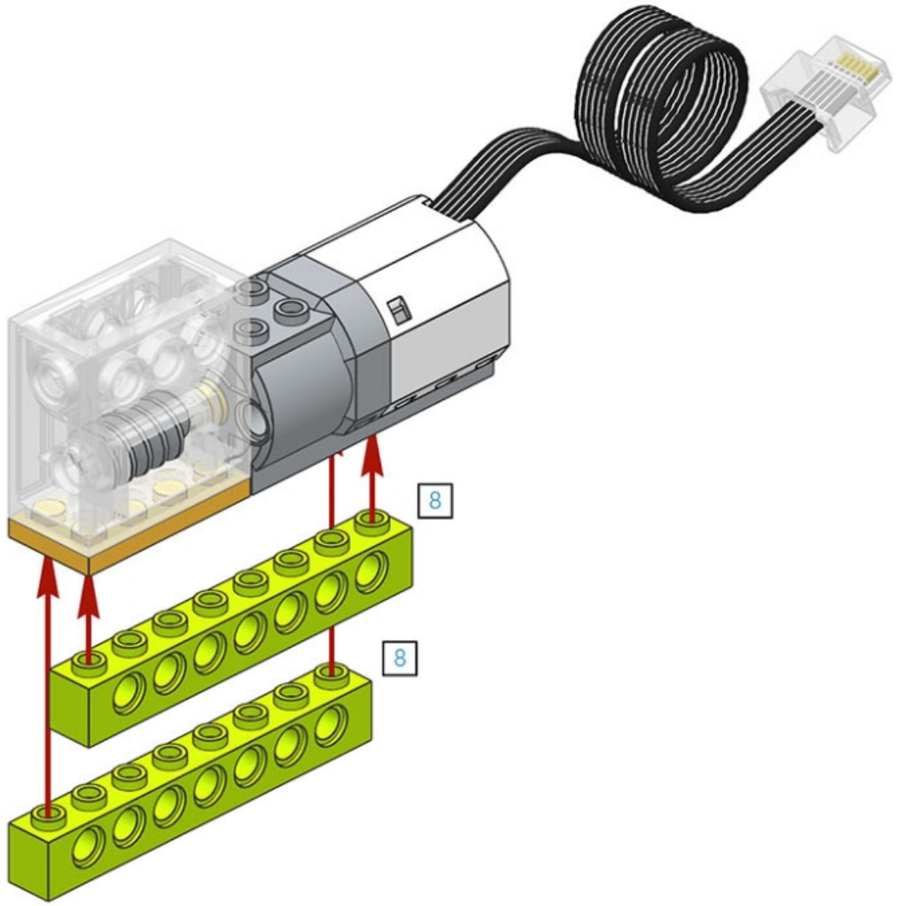

ROBORISE-IT!
ROBOTIC EDUCATION
nerrka@gmail.com

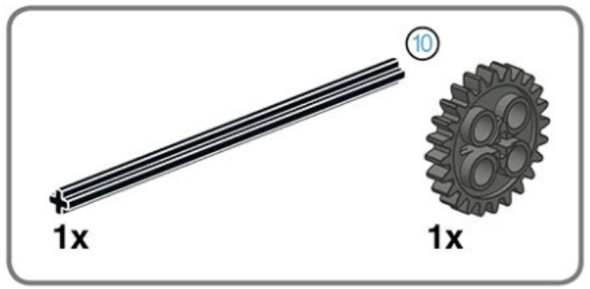

4

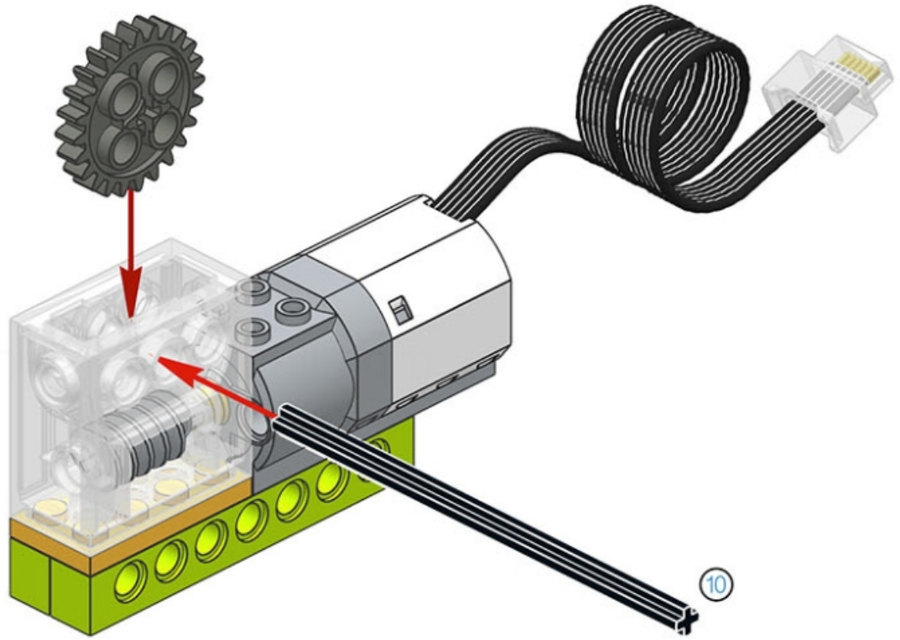

ROBORISE-IT!
ROBOTIC EDUCATION

2x

5

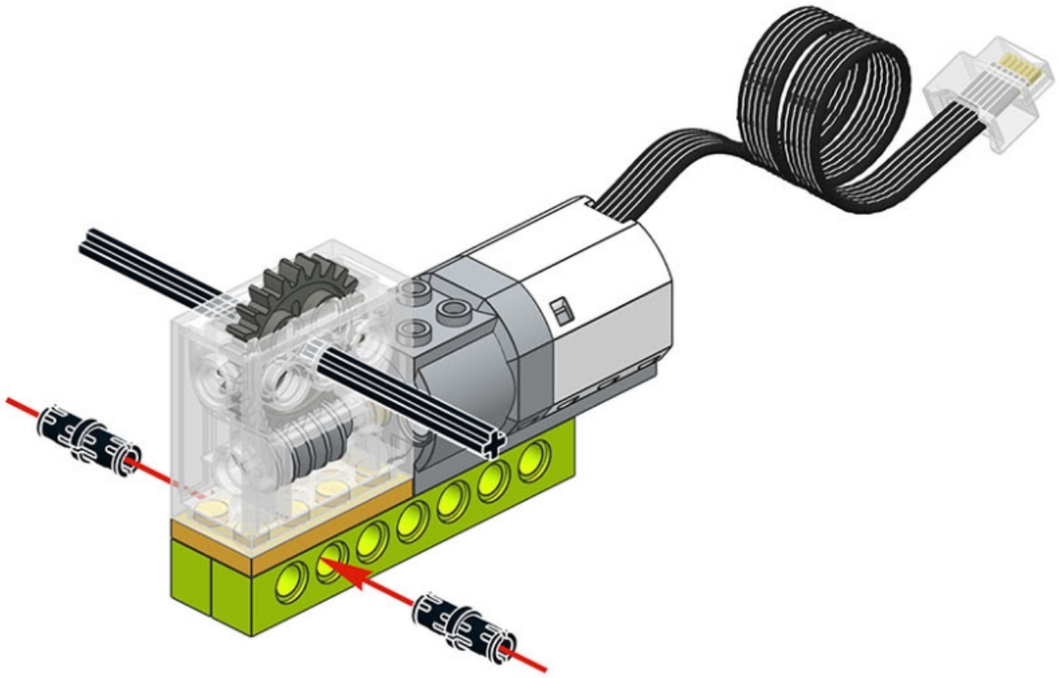

nerrka@gmail.com

5/52

0

25

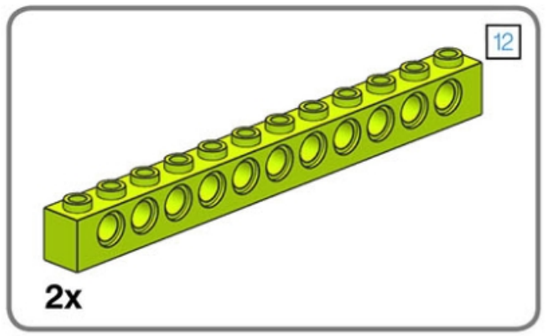

6

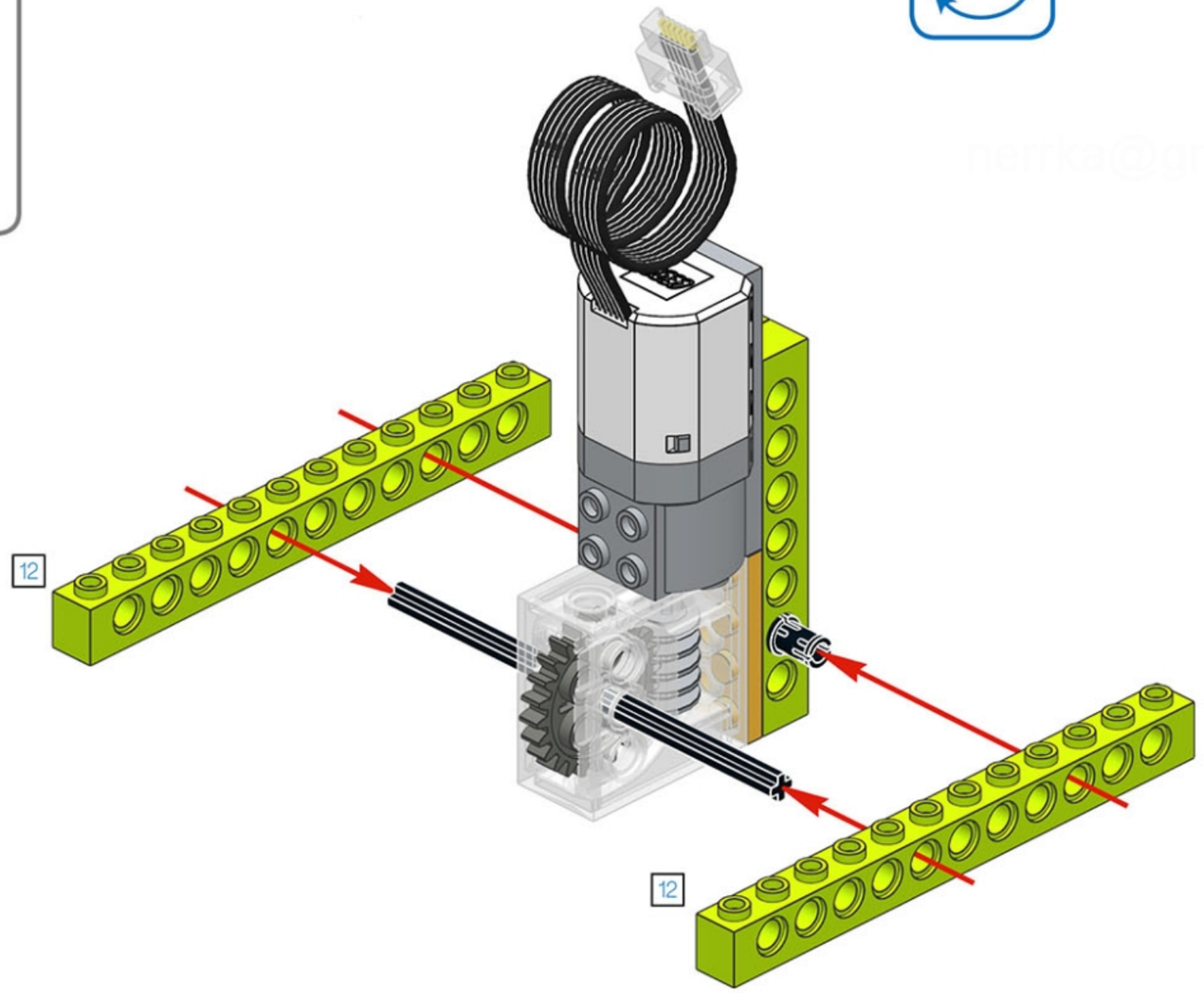

ROBORISE-IT!
ROBOTIC EDUCATION

ROBORISE-IT!
ROBOTIC EDUCATION

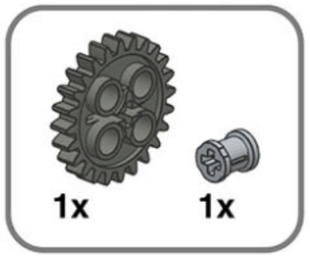

7

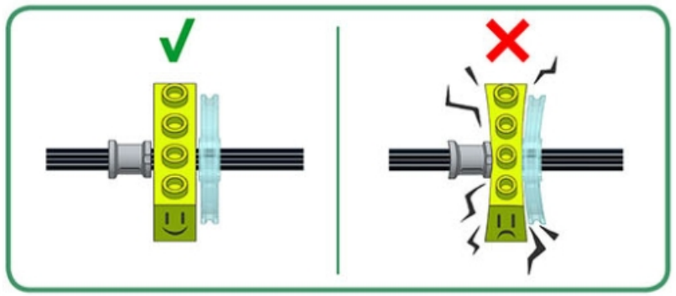

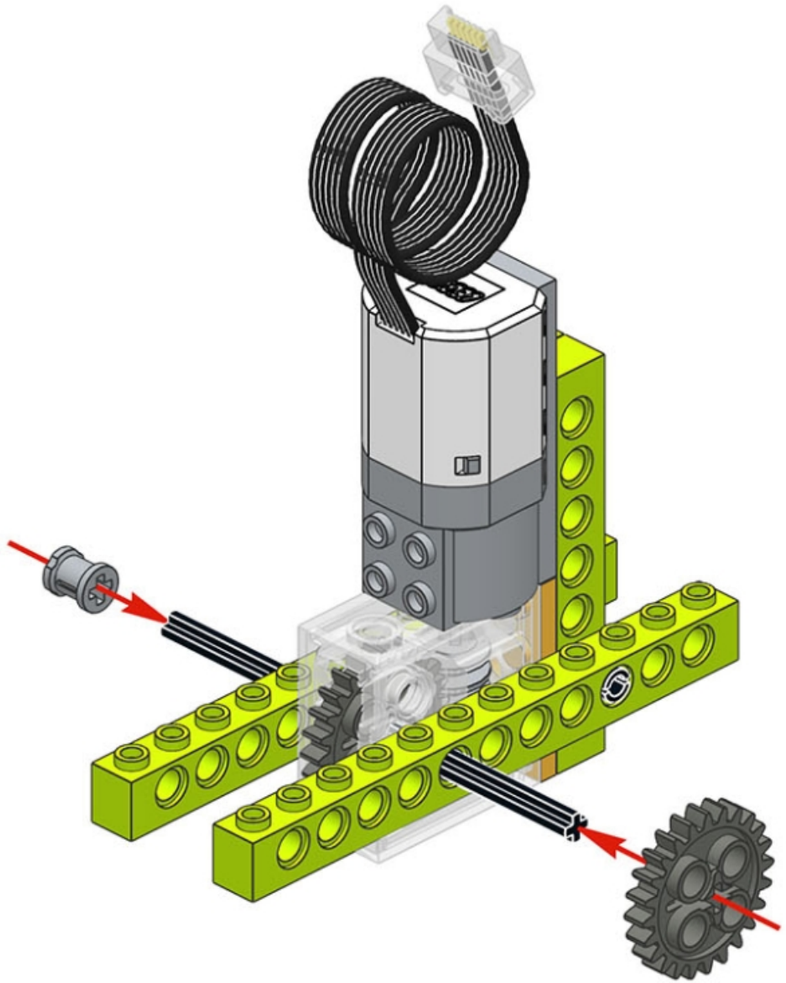

nerka@gmail.com

nerrke@gmail.com

ROBORISE-IT!
ROBOTIC EDUCATION

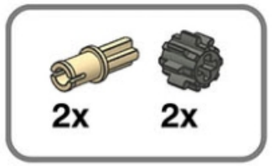

8

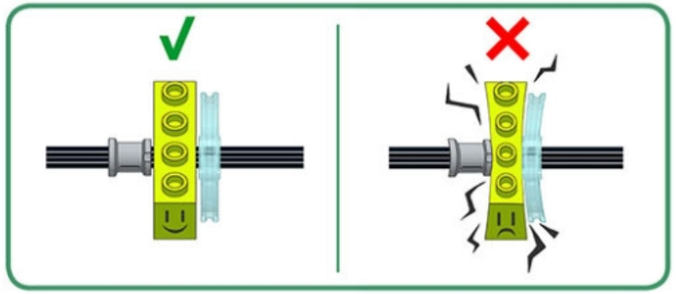

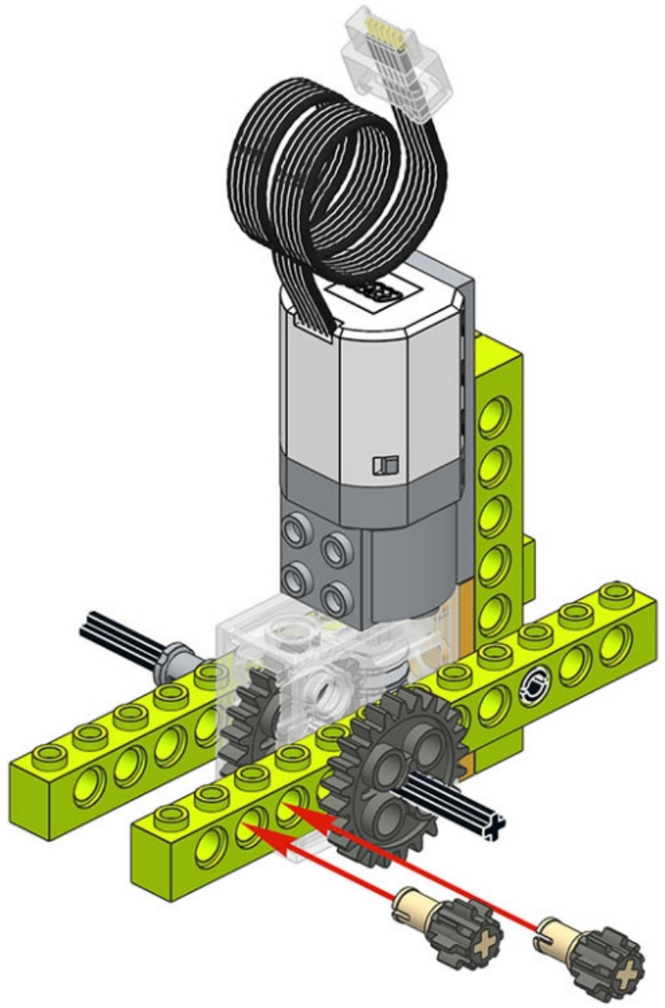

ROBORISE-IT!
ROBOTIC EDUCATION

9

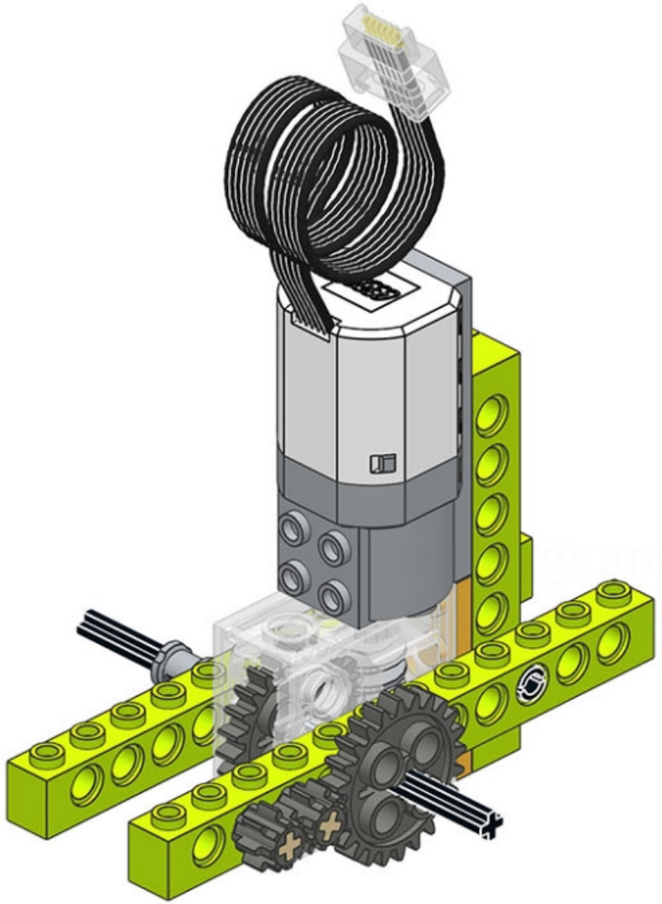

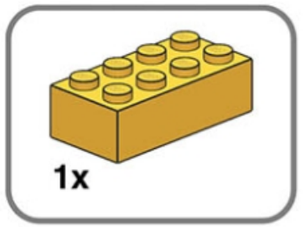

10

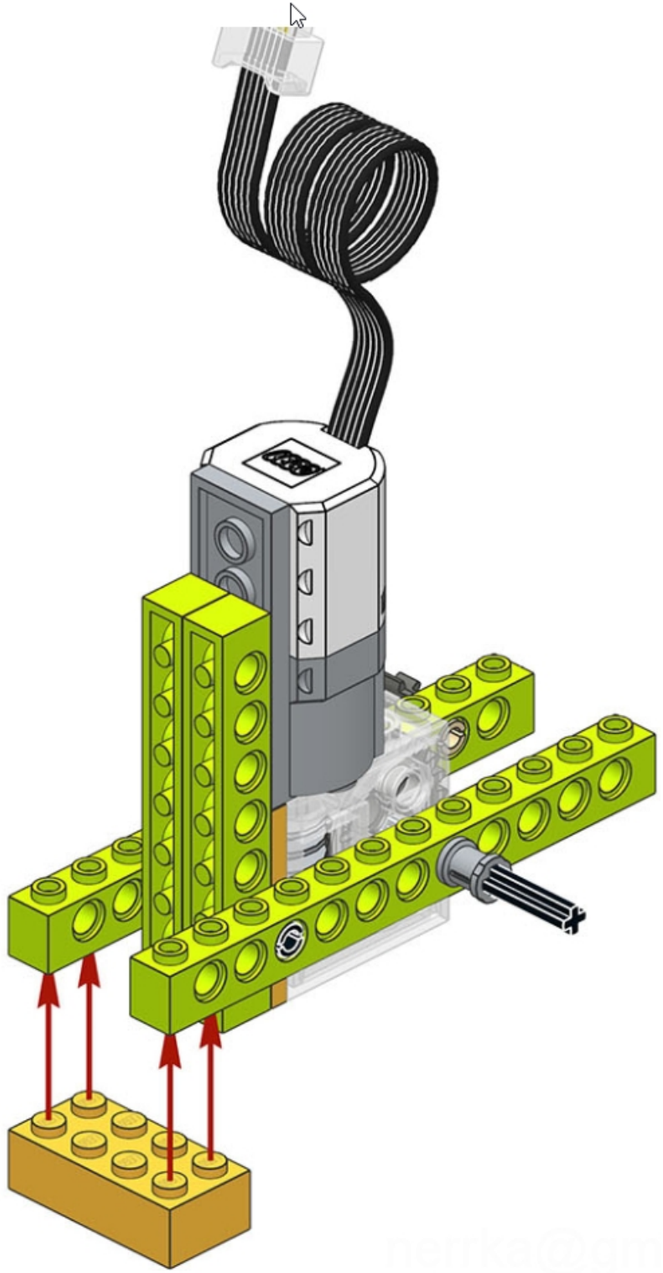

ROBORISE-IT!
ROBOTIC EDUCATION

10/52

0

30

ROBORISE-IT!
ROBOTIC EDUCATION

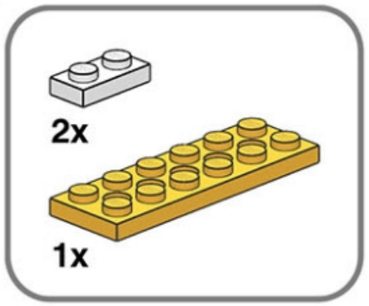

1

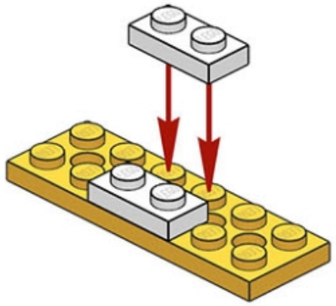

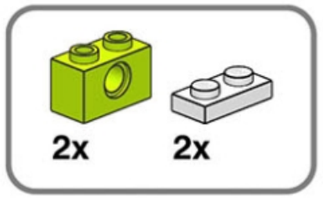

2

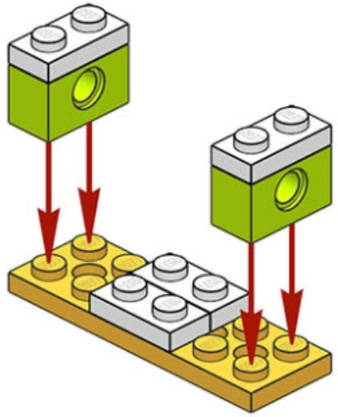

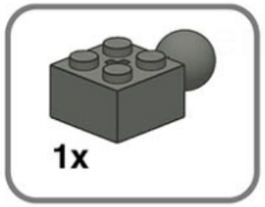

3

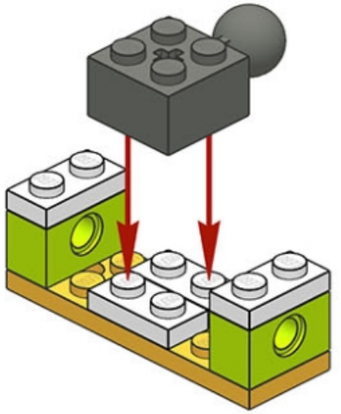

11/52

0

31

ROBORISE-IT!
ROBOTIC EDUCATION

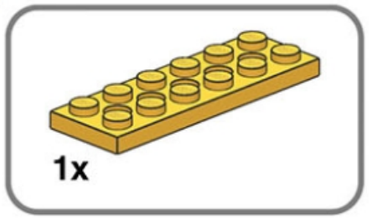

4

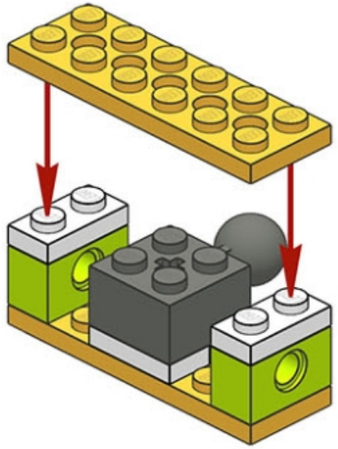

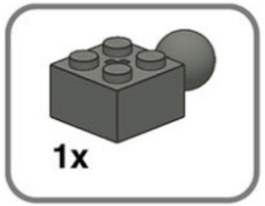

5

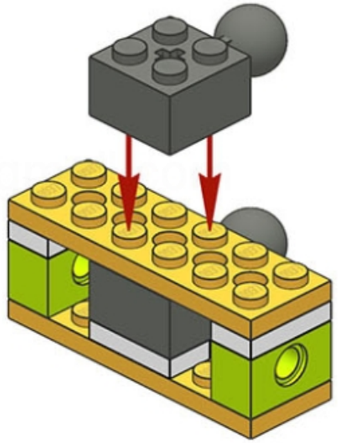

6

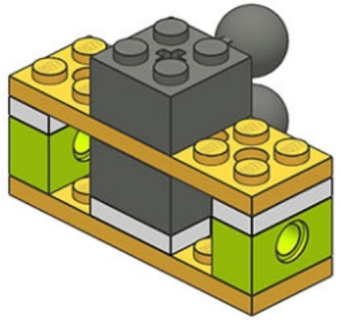

12/52

0

32

ROBORISE-IT!
ROBOTIC EDUCATION

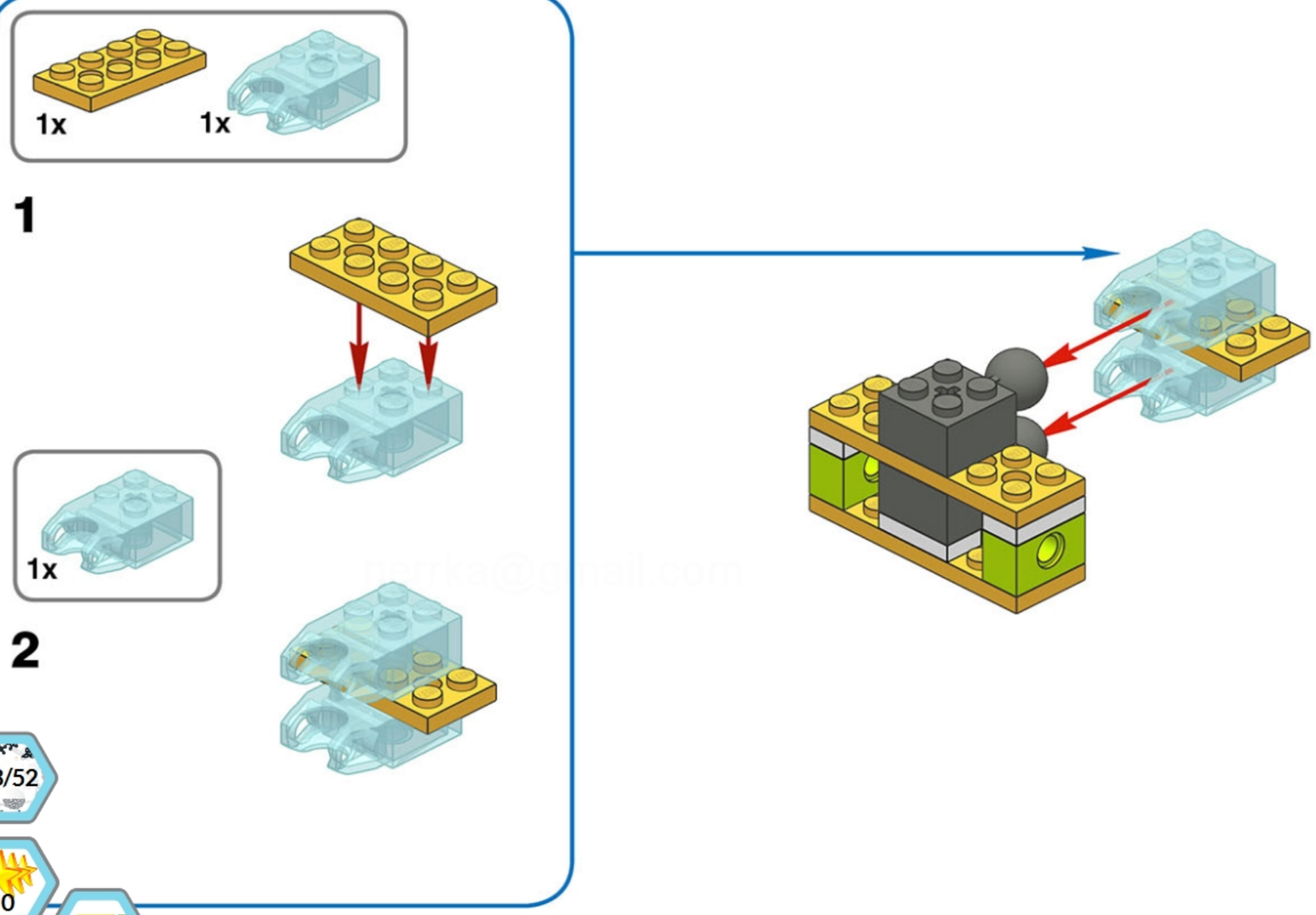

barka@gmail.com

13/52

0

33

ROBORISE-IT!
ROBOTIC EDUCATION

14

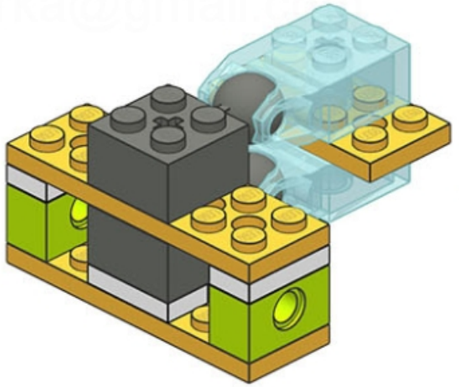

nerrka@gmail.com

14/52

0

34

ROBORISE-IT!
ROBOTIC EDUCATION

15

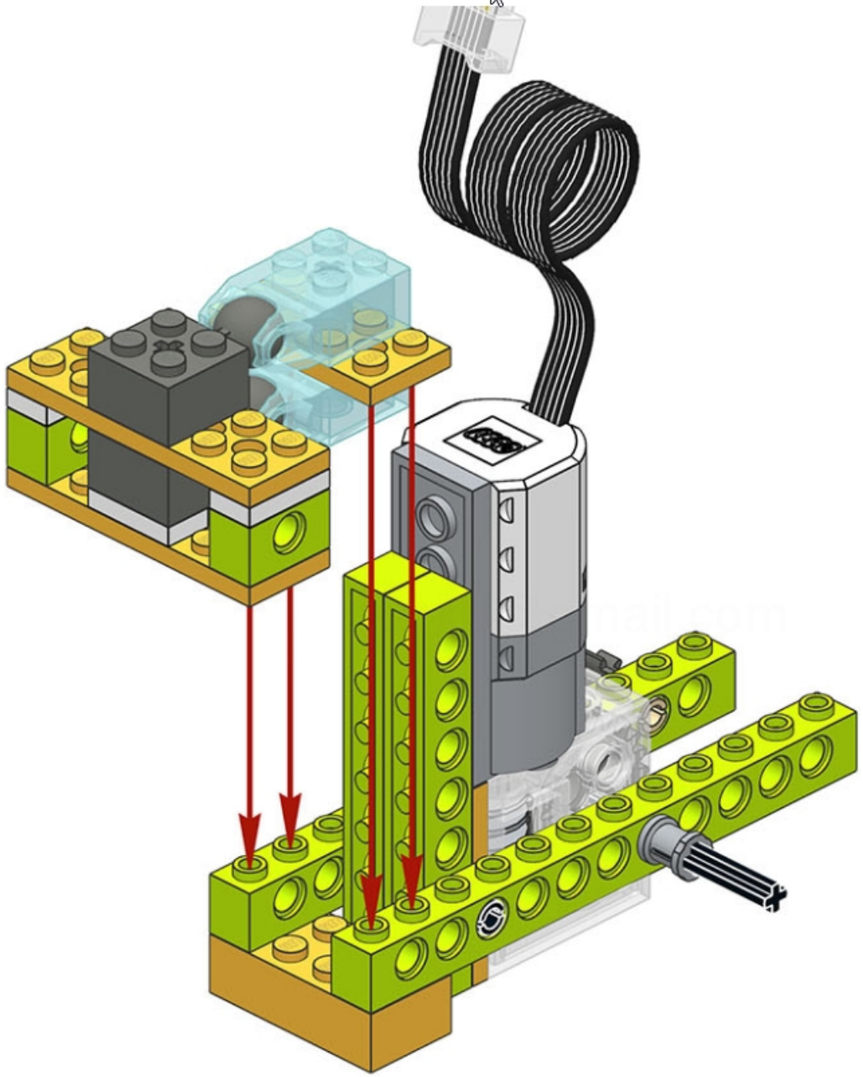

15/52

0

35

16

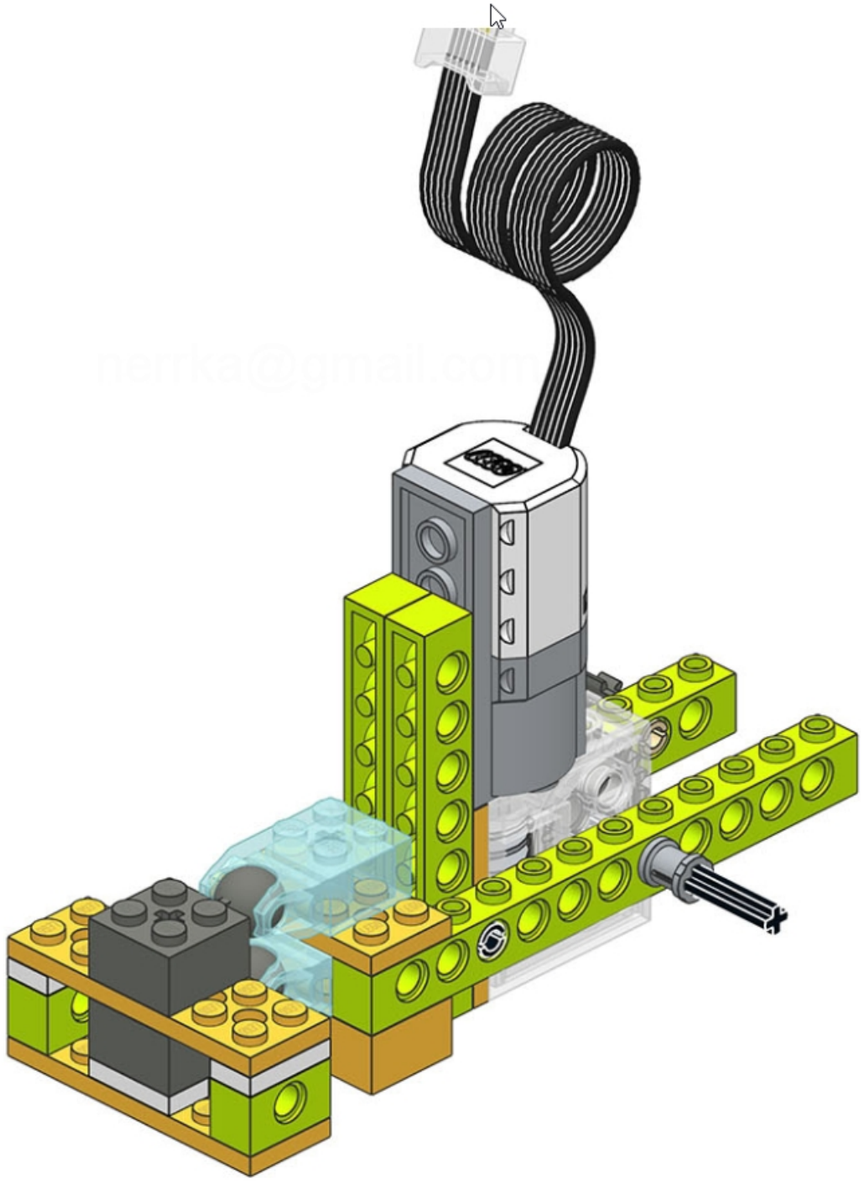

ROBORISE-IT!
ROBOTIC EDUCATION

ROBORISE-IT!
ROBOTIC EDUCATION

2x 1x

1

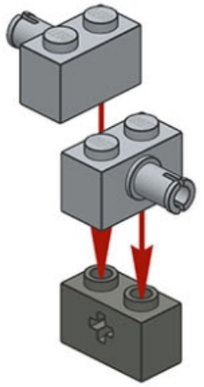

2x

2

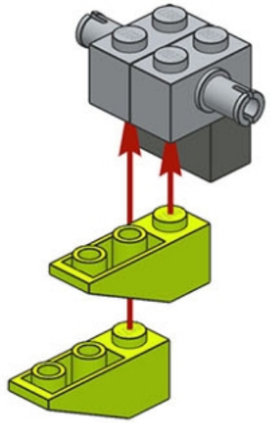

2x

3

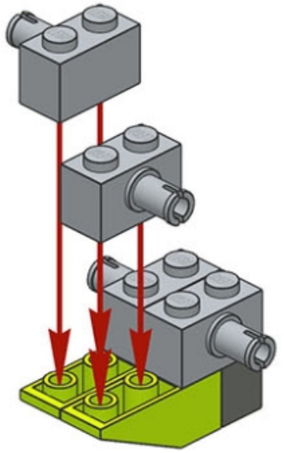

4

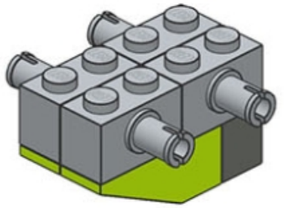

17/52

0

37

18

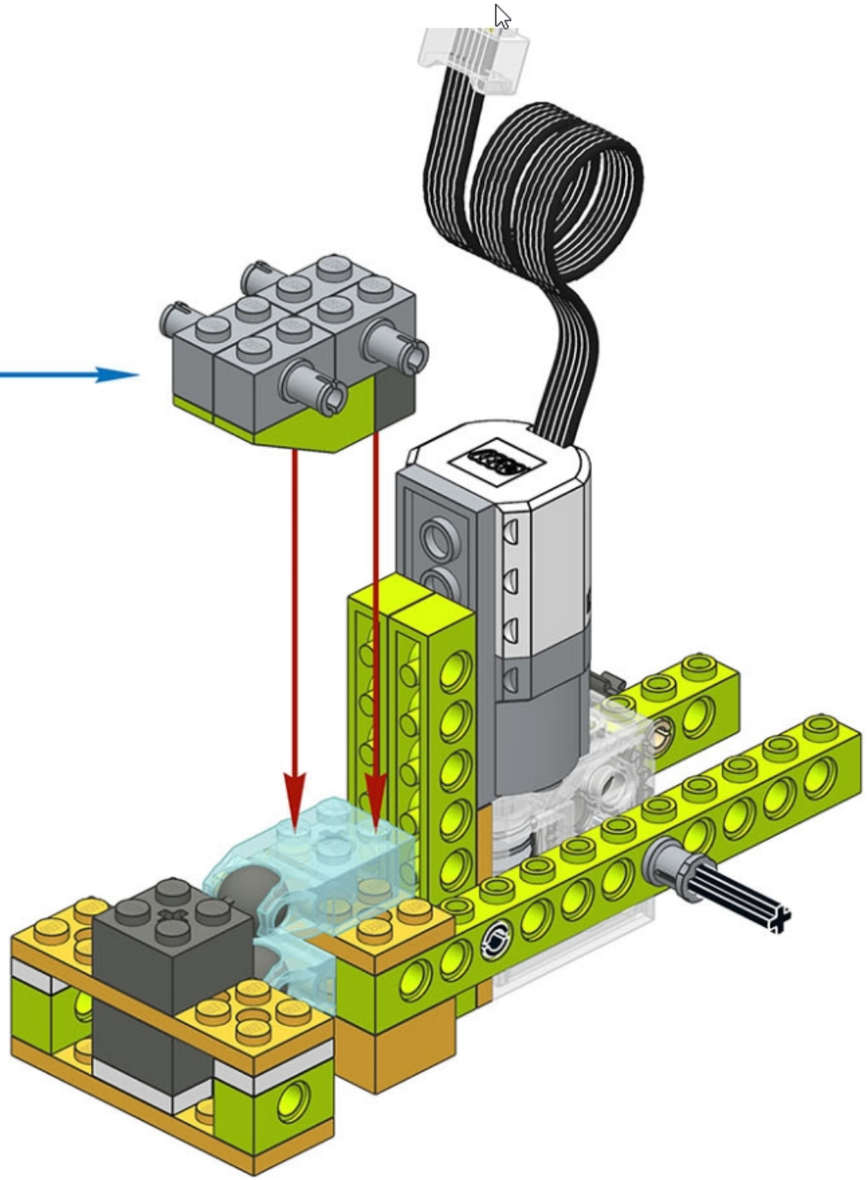

nerrka@gmail.com

ROBORISE-IT!
ROBOTIC EDUCATION

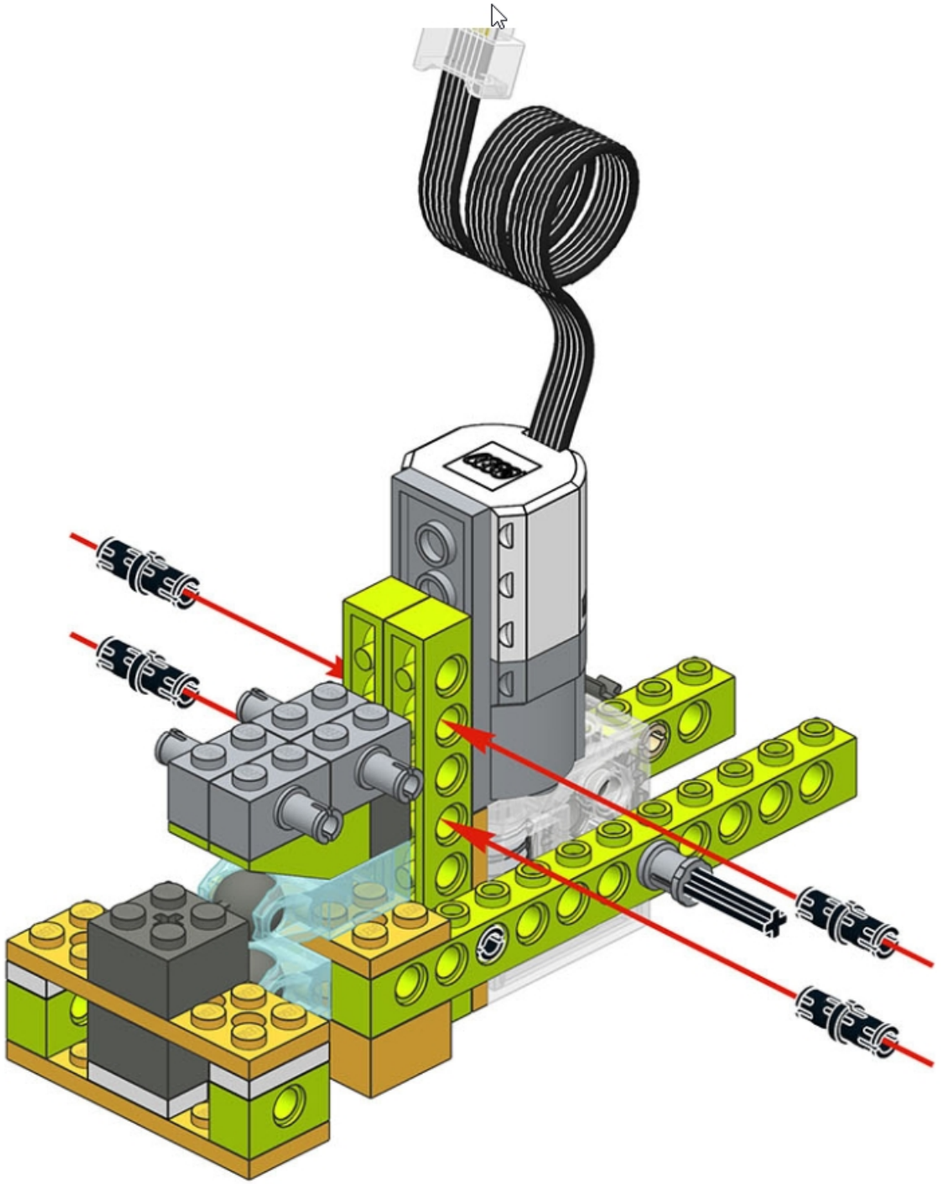

4x

19

ROBORISE-IT!
ROBOTIC EDUCATION

19/52

0

39

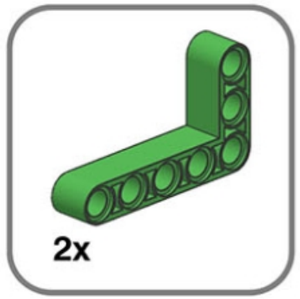

20

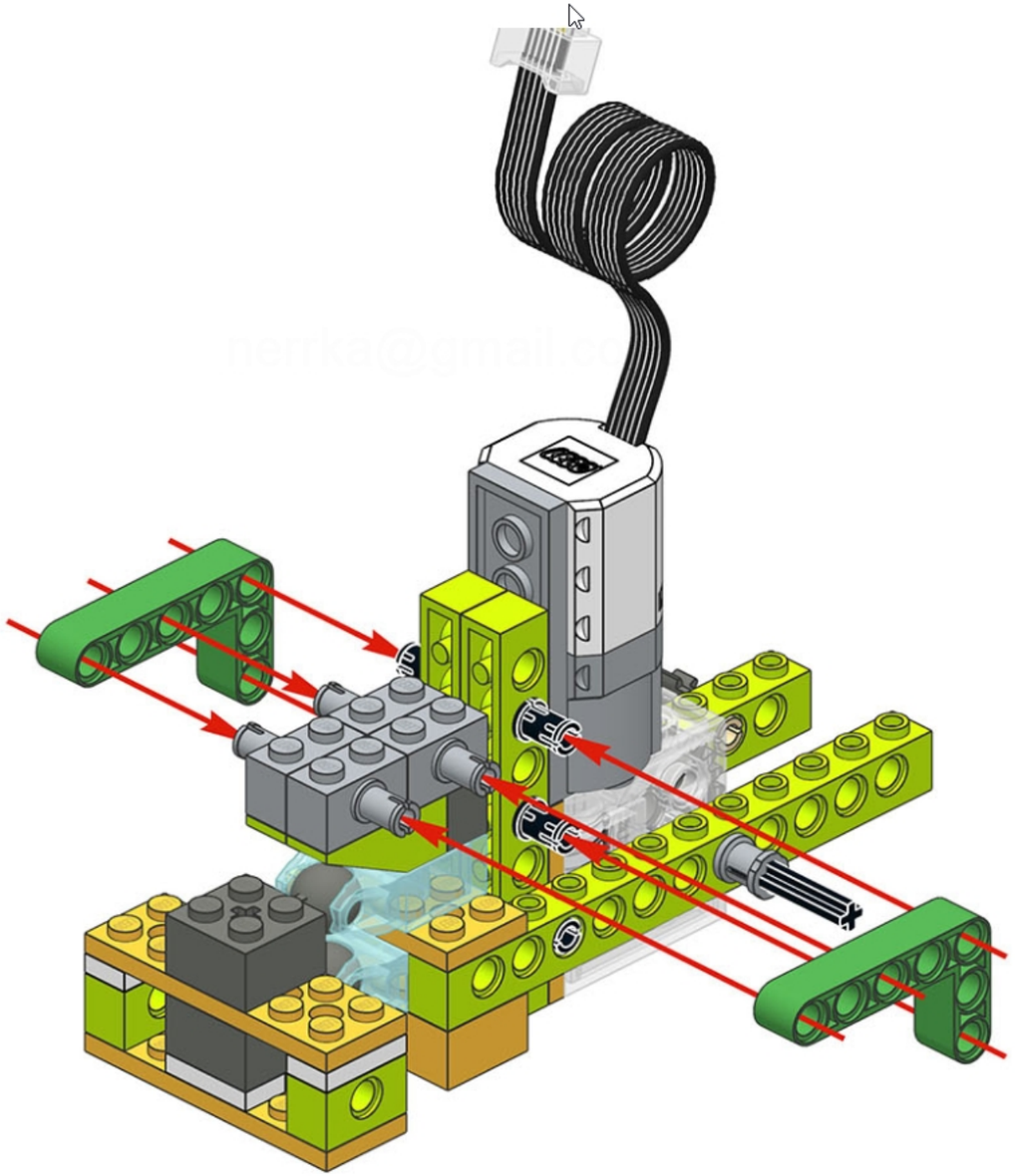

ROBORISE-IT!
ROBOTIC EDUCATION

20/52

0

40

21

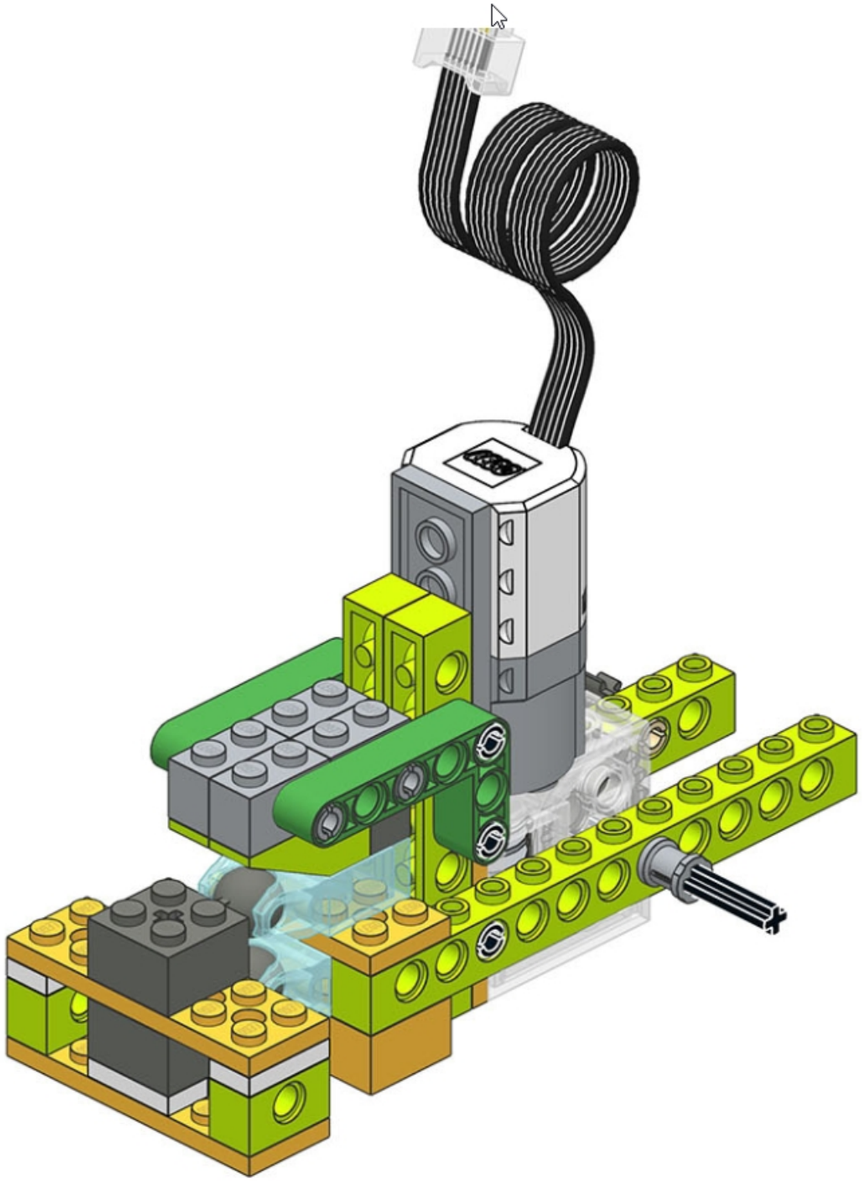

ROBORISE-IT!
ROBOTIC EDUCATION

renka@gmail.com

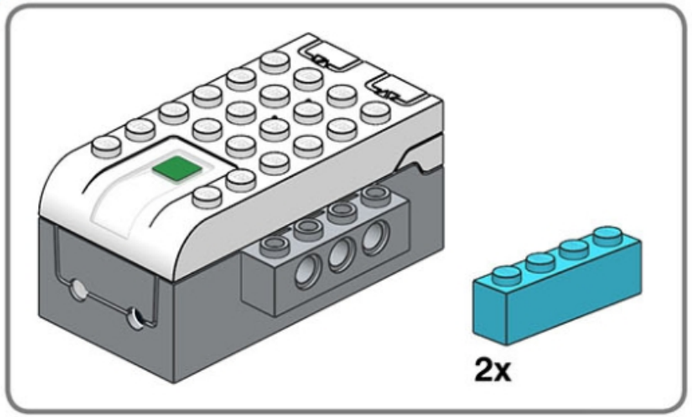

1

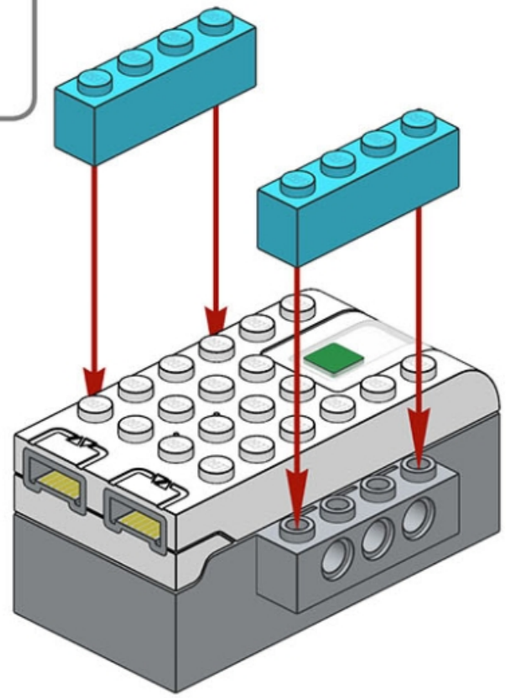

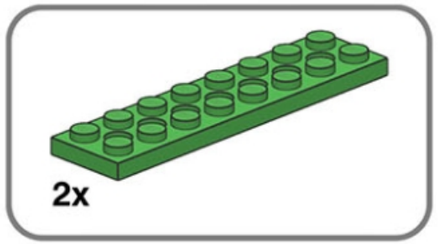

2

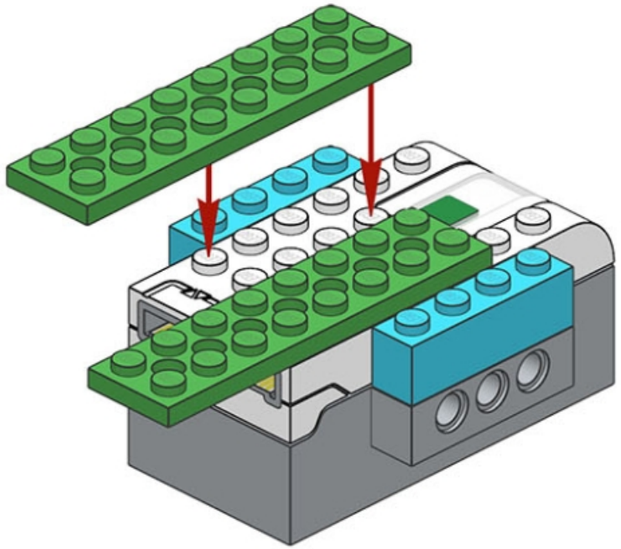

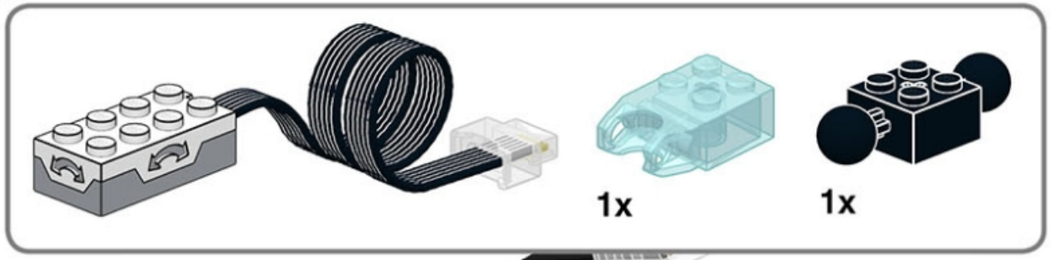

3

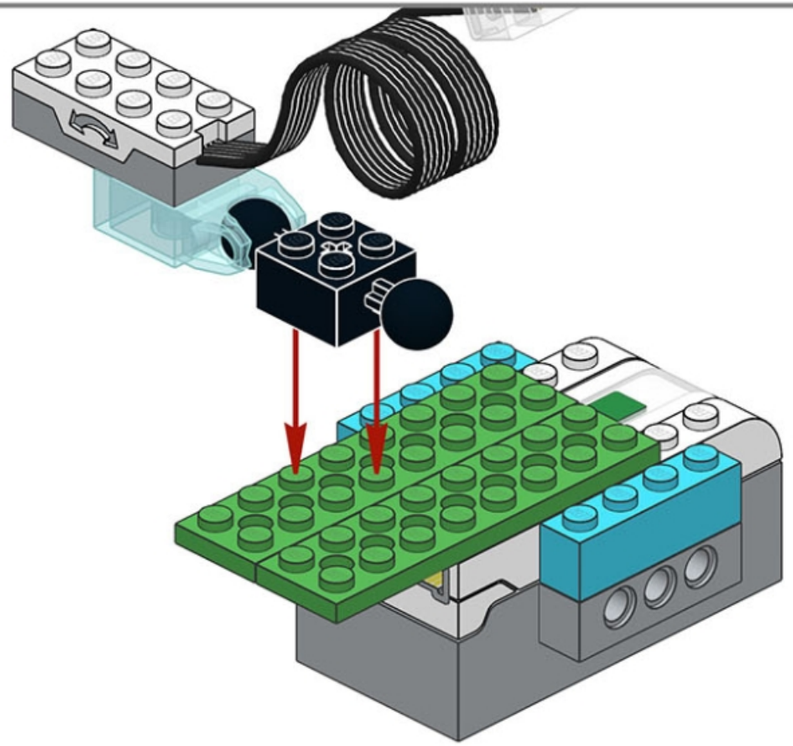

4

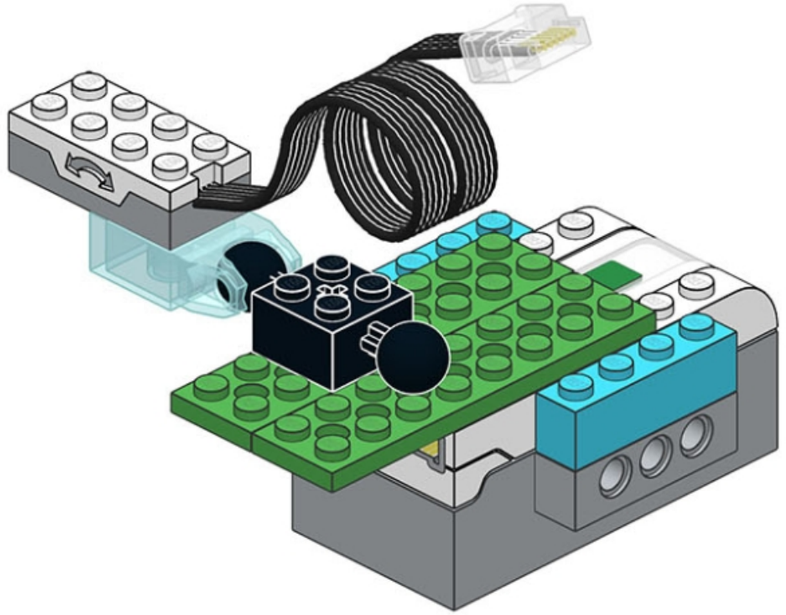

ROBORISE-IT!
ROBOTIC EDUCATION

5

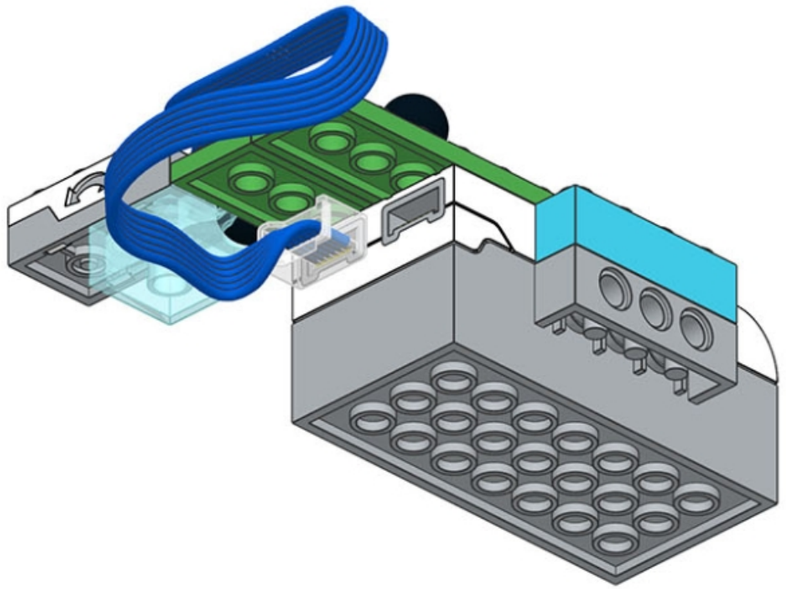

6

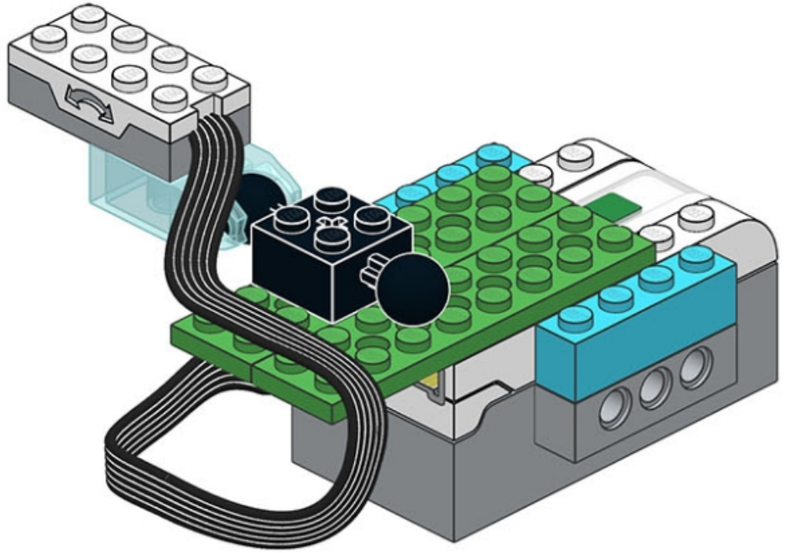

nerrka@gmail.com

ROBORISE-IT!
ROBOTIC EDUCATION

25

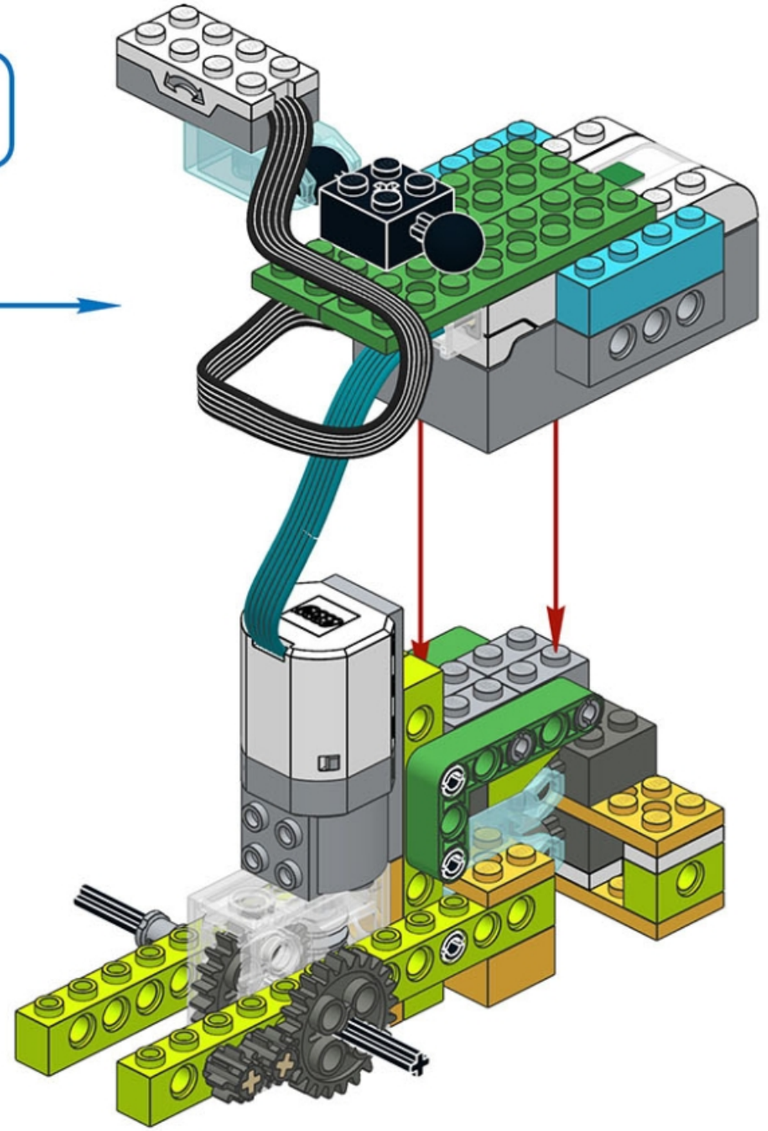

merika@gmail.com

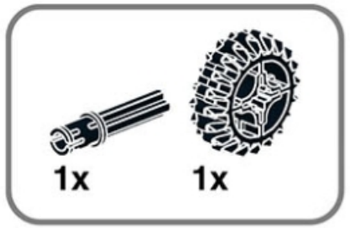

26

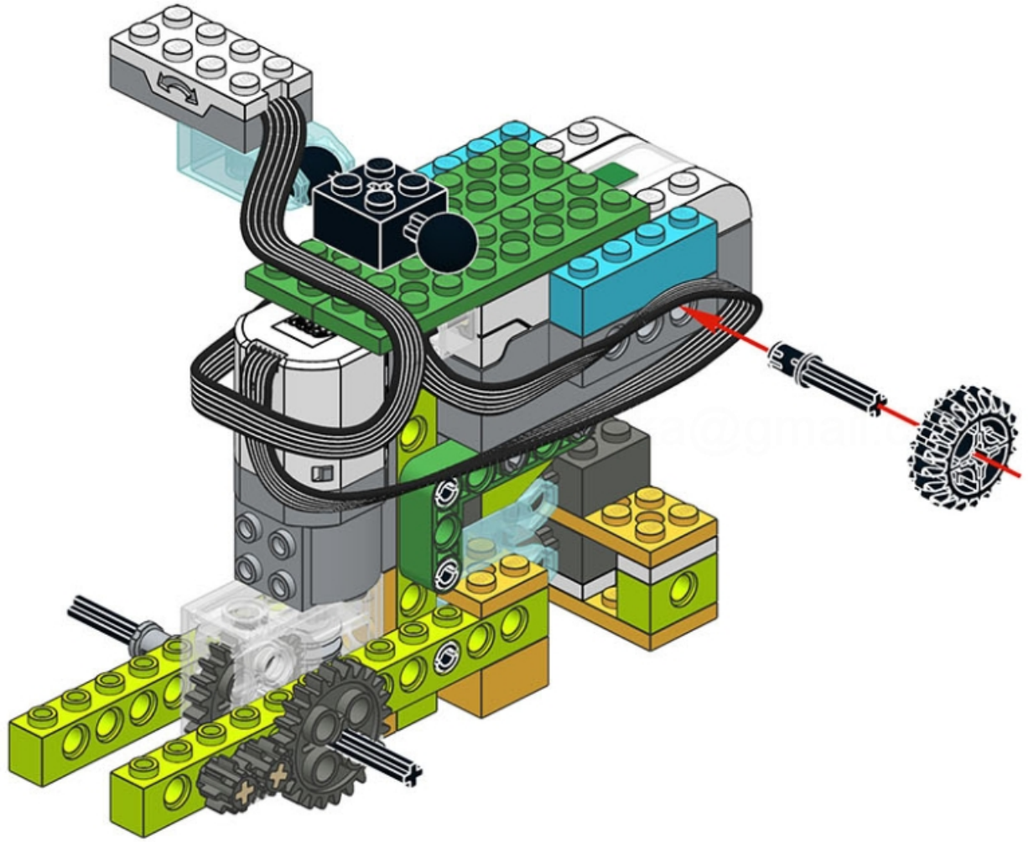

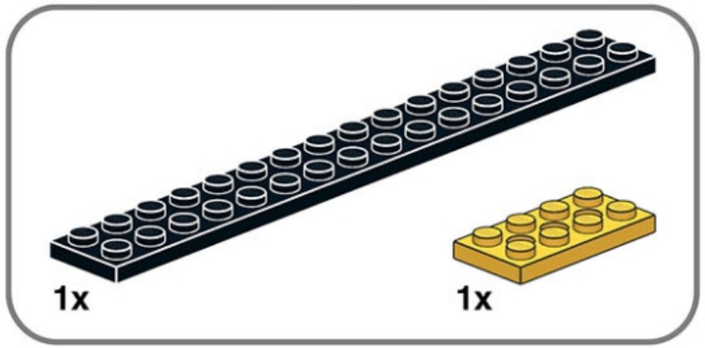

27

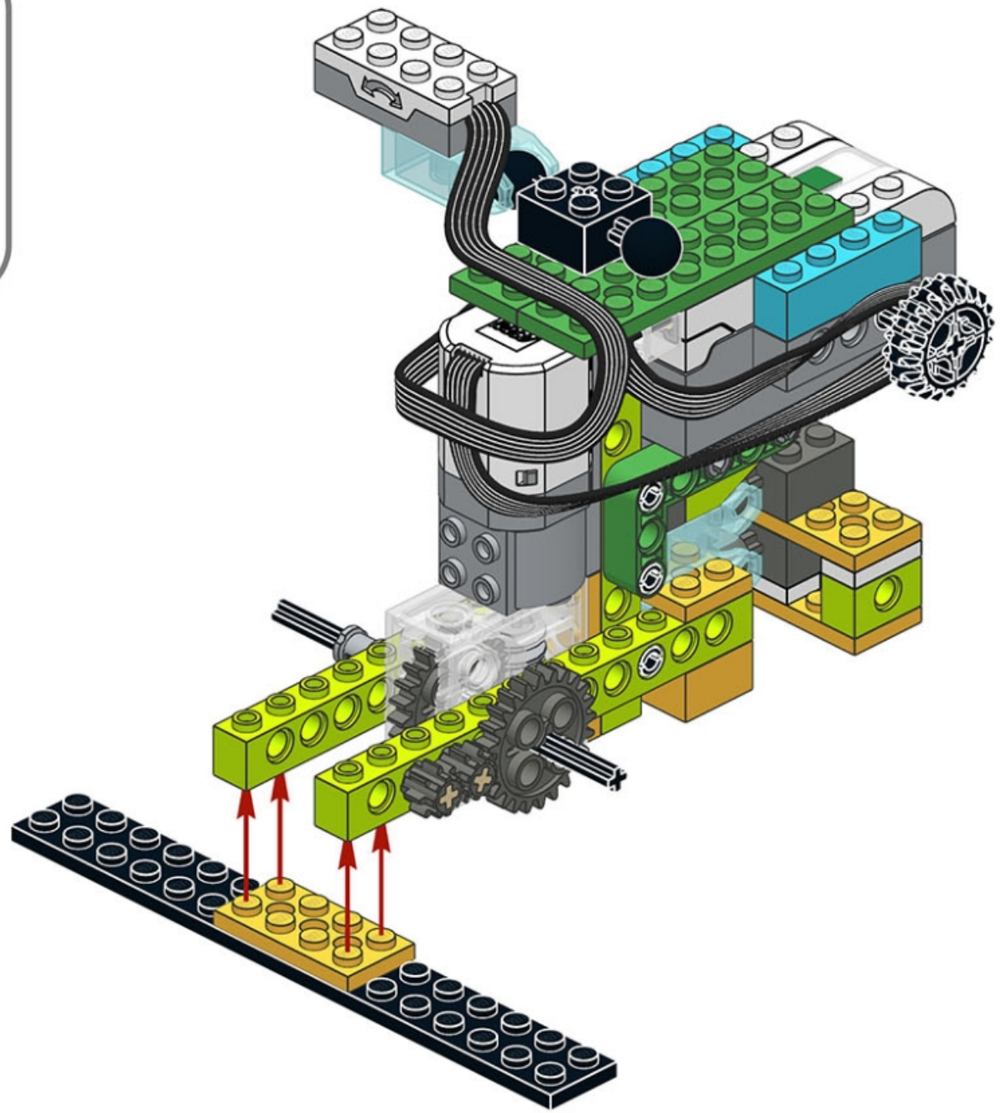

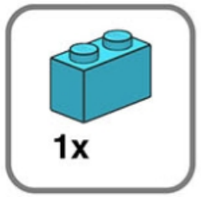

28

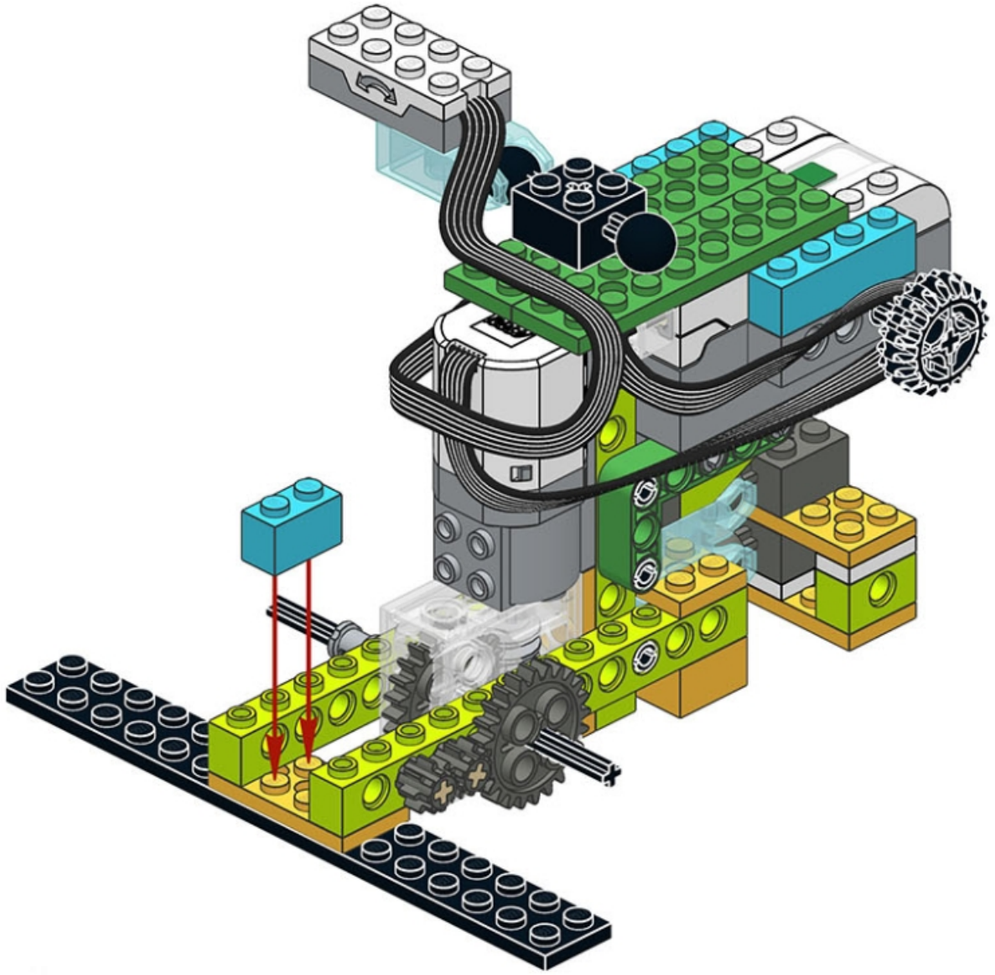

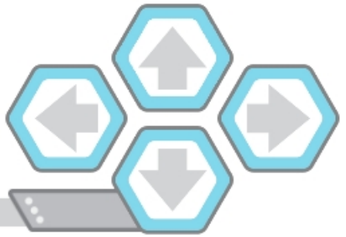

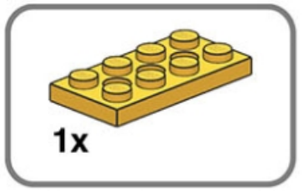

29

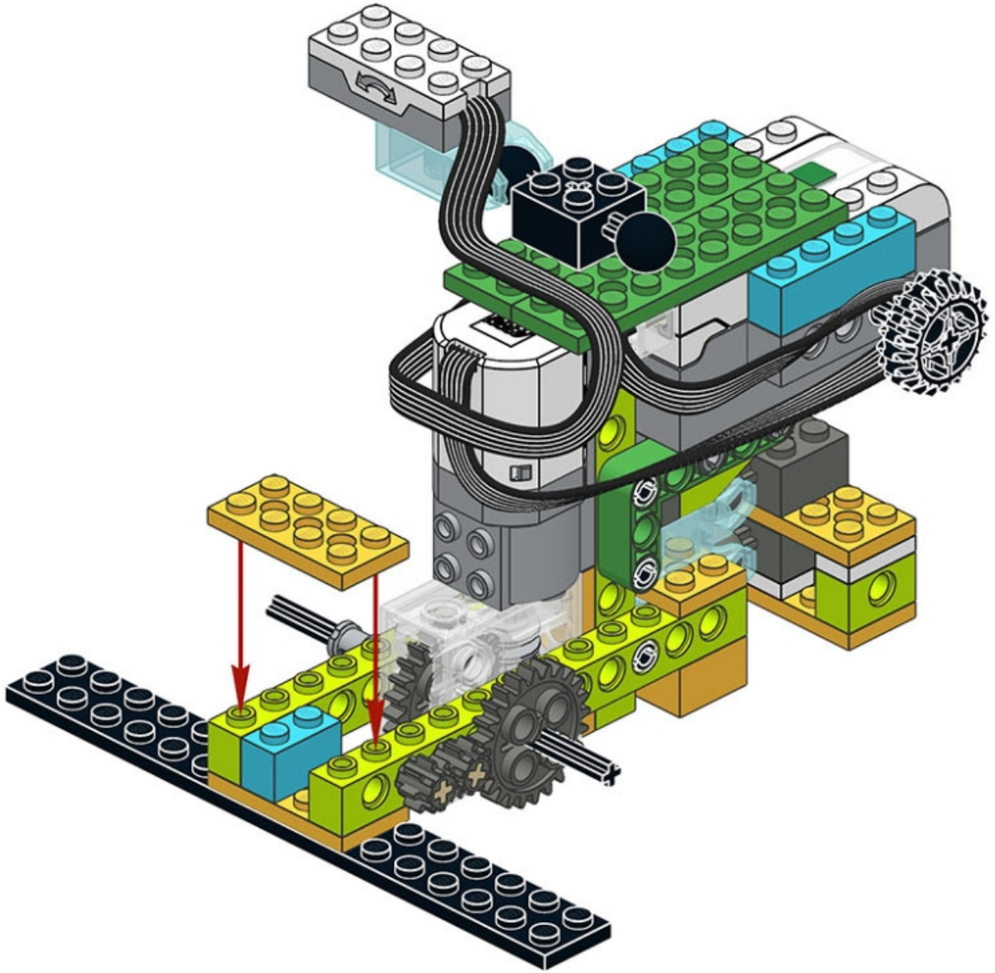

ROBORISE-IT!
ROBOTIC EDUCATION

30

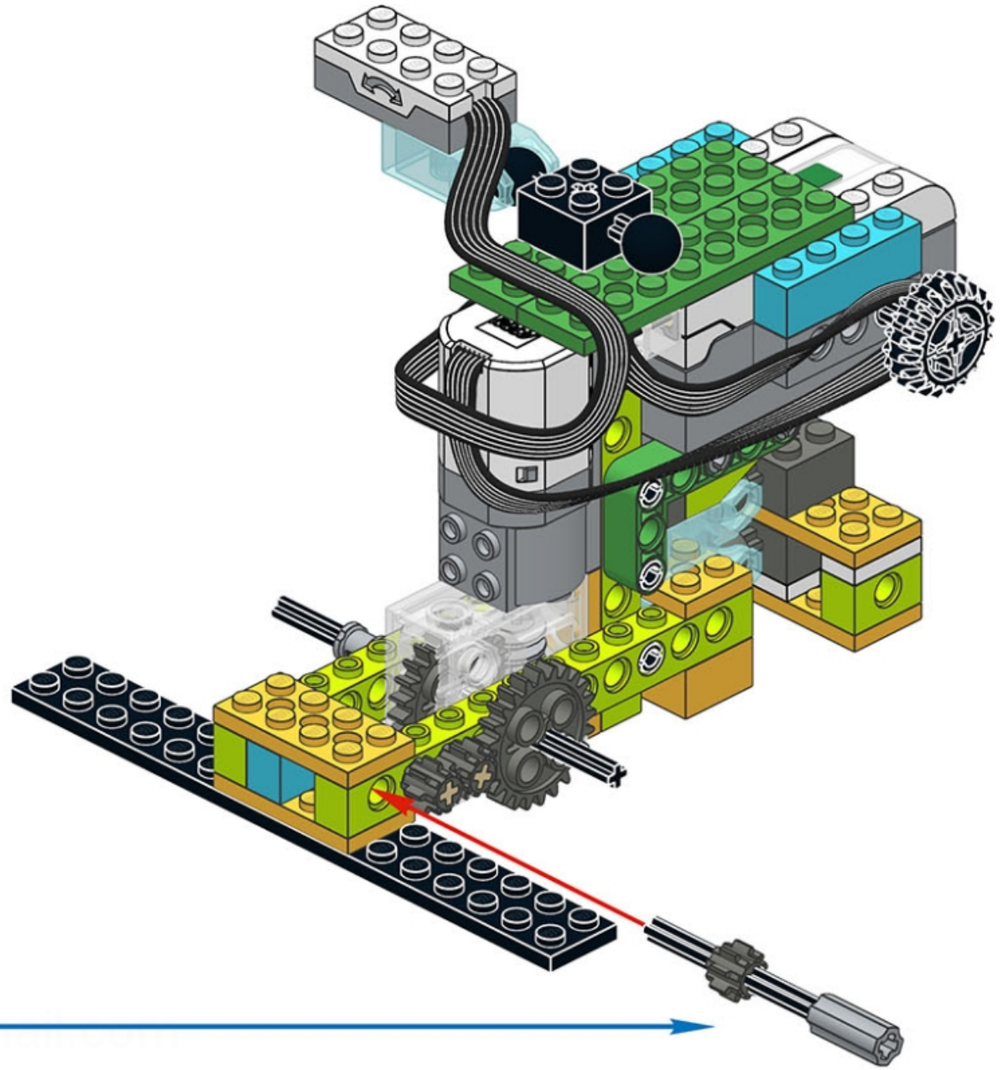

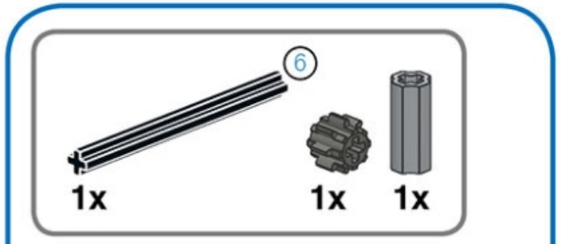

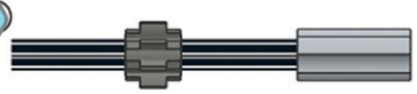

ROBORISE-IT!
ROBOTIC EDUCATION

31

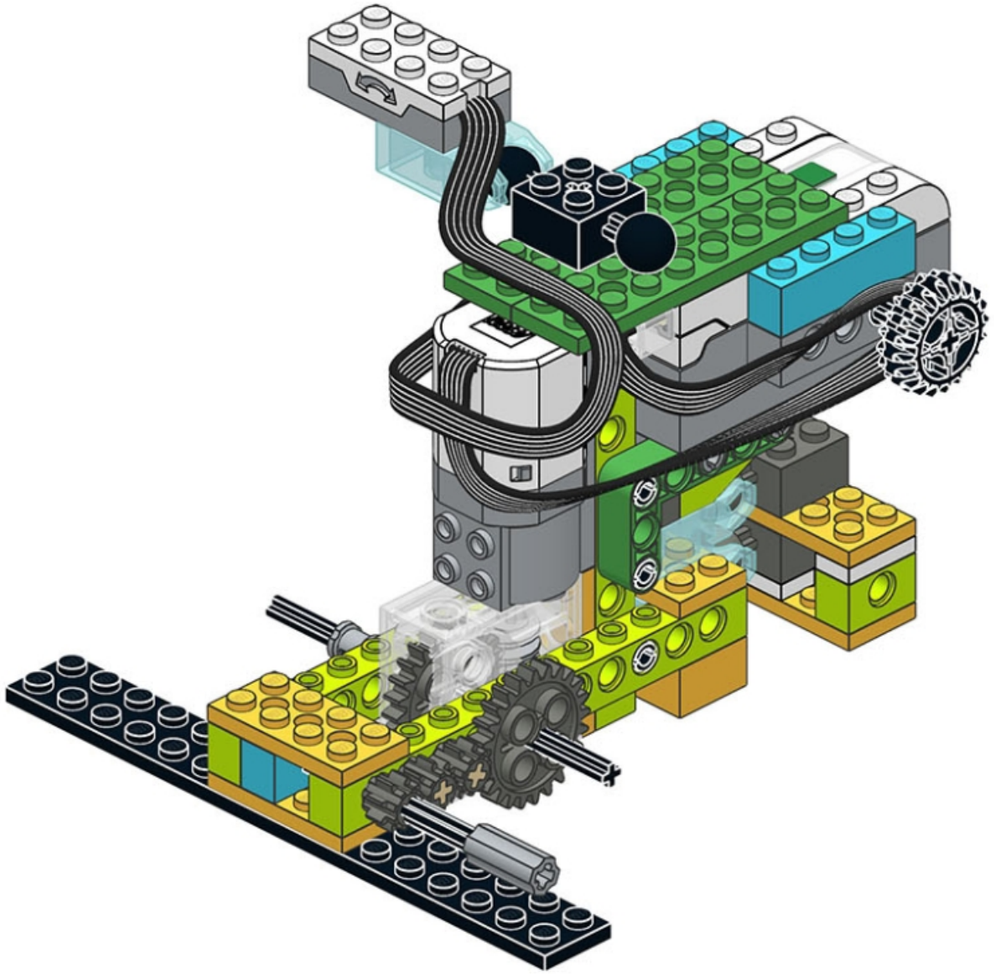

ROBORISE-IT!
ROBOTIC EDUCATION

1x

4
1x

4
1x

1

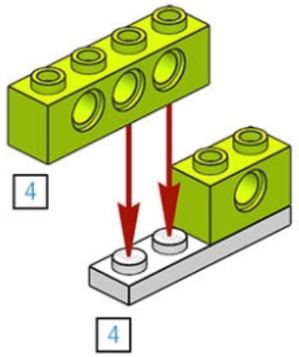

4
1x 1x

2

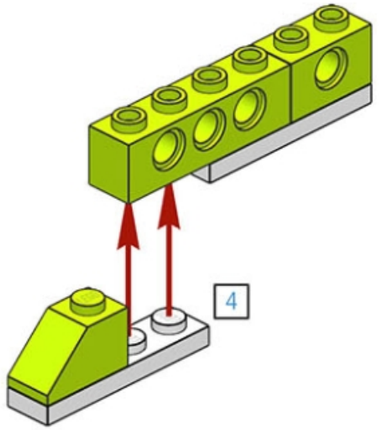

1x

3

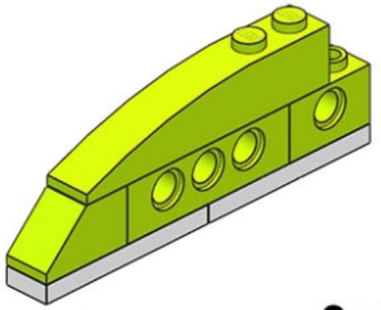

2x

ROBORISE-IT!
ROBOTIC EDUCATION

33

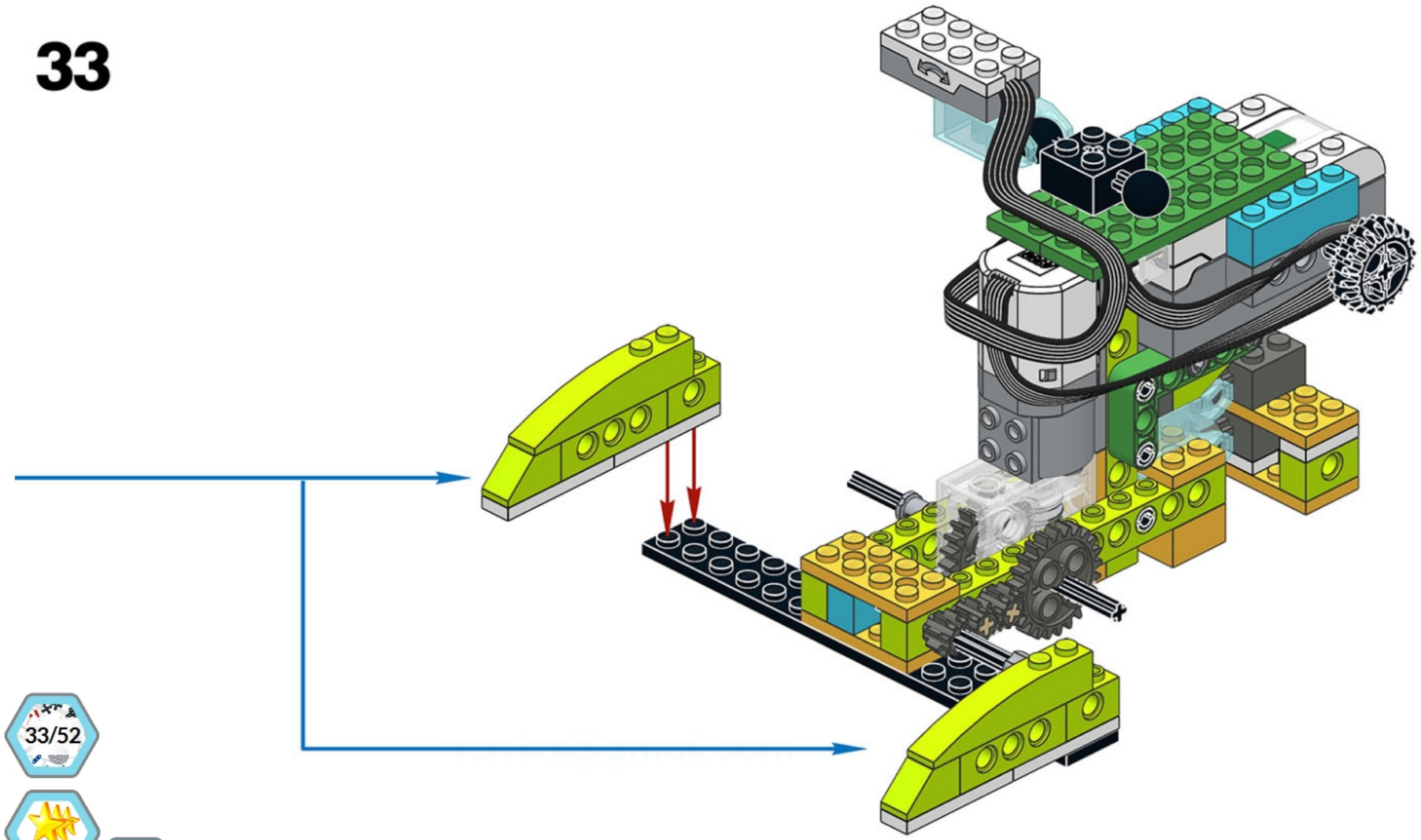

33/52

0

53

ROBORISE-IT!
ROBOTIC EDUCATION

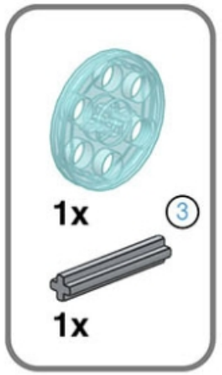

34

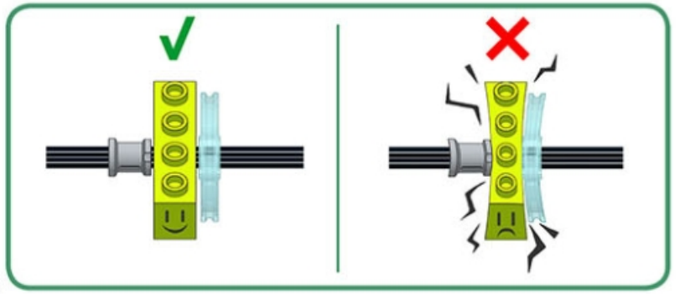

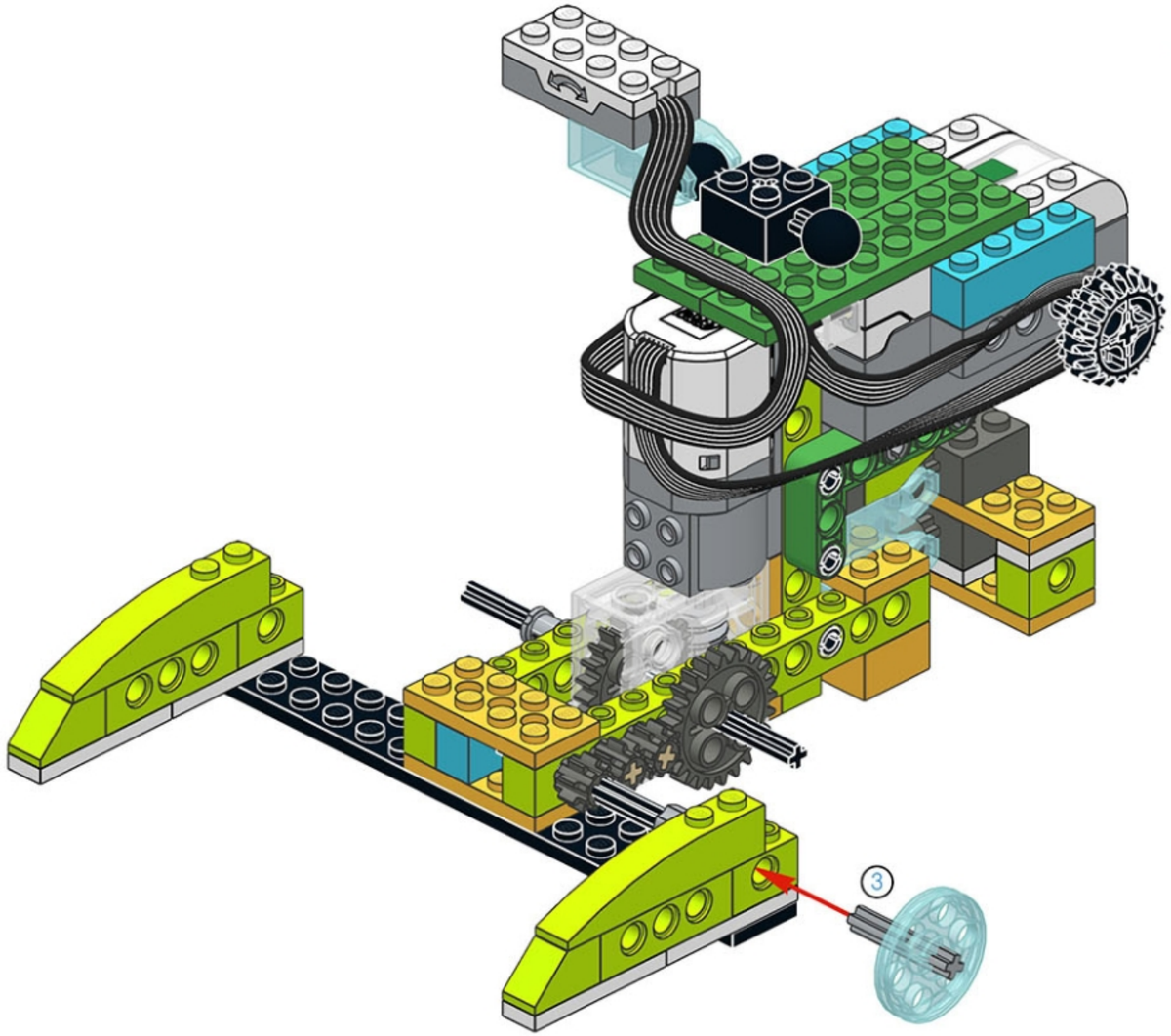

hanka@gmail.com

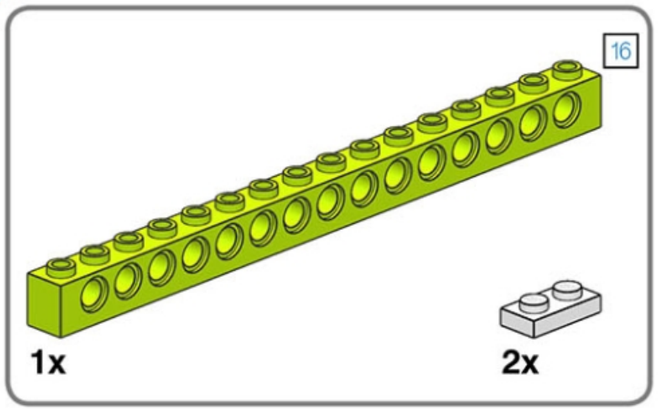

1

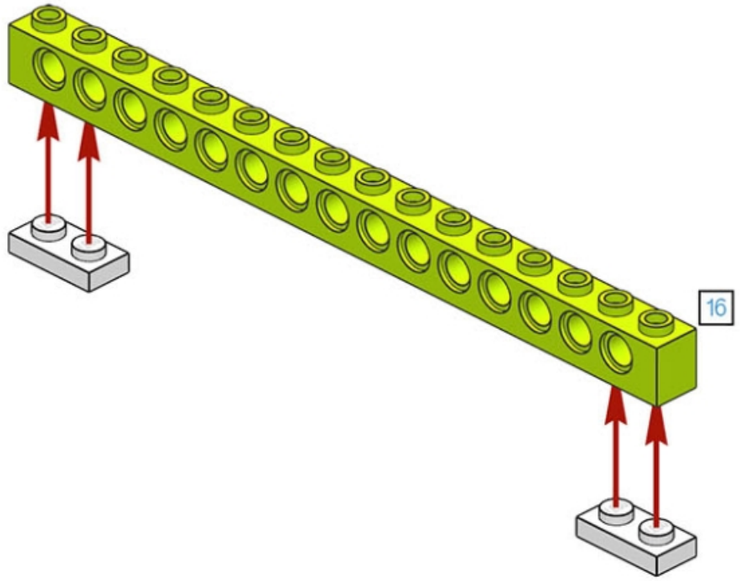

2

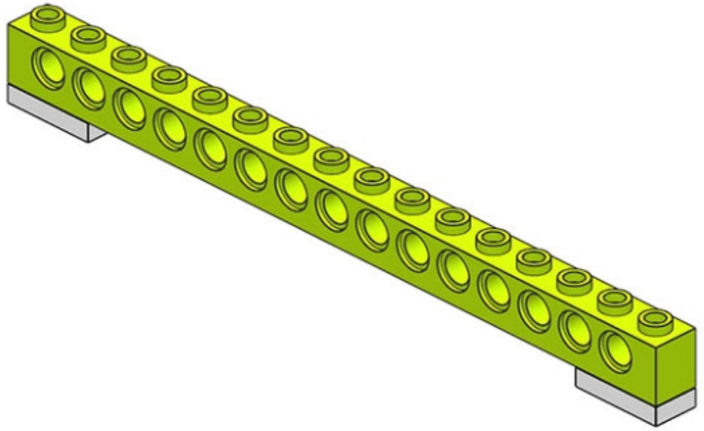

ROBORISE-IT!
ROBOTIC EDUCATION

36

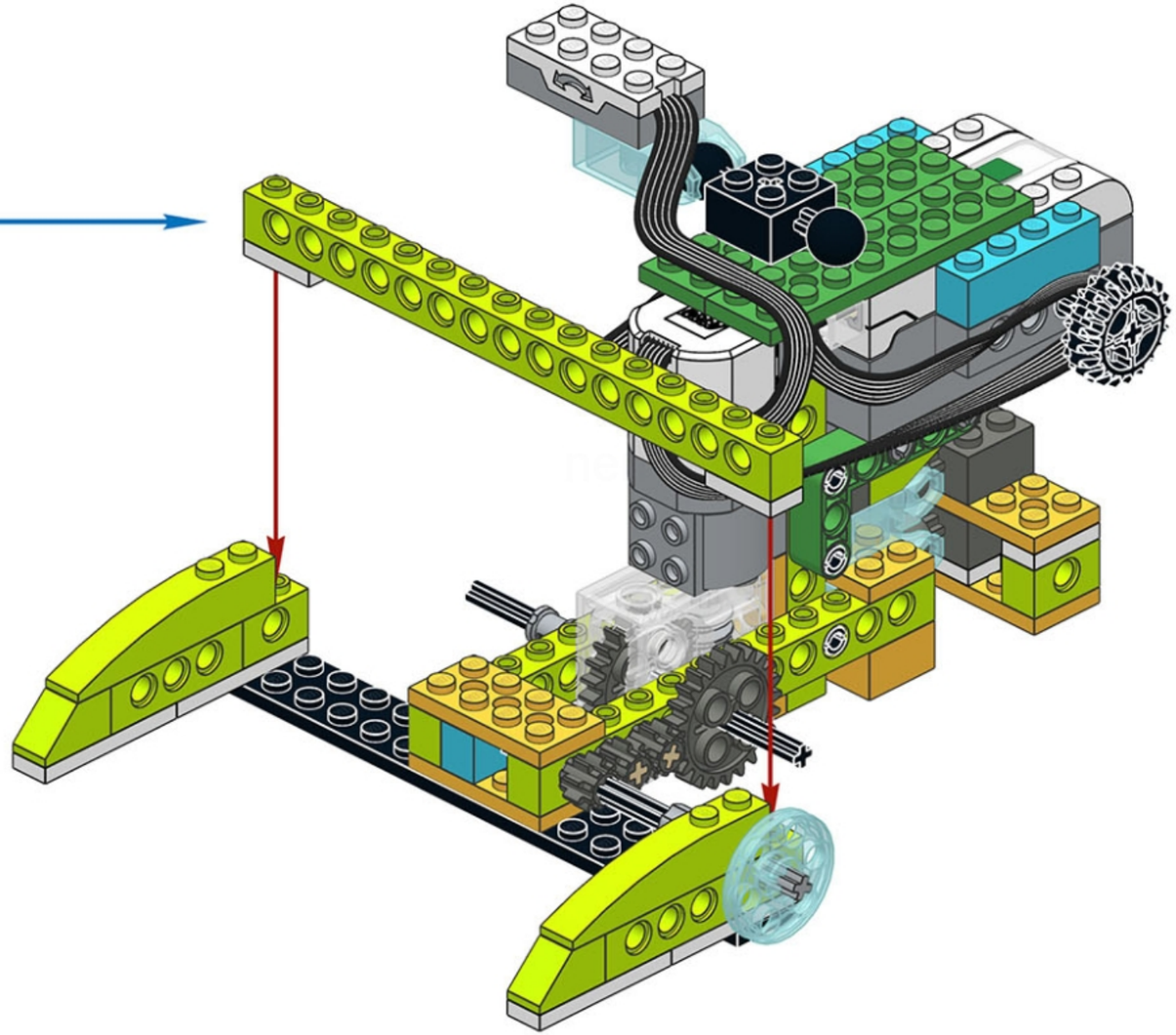

ROBORISE-IT!
ROBOTIC EDUCATION

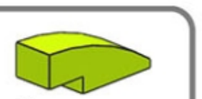

37

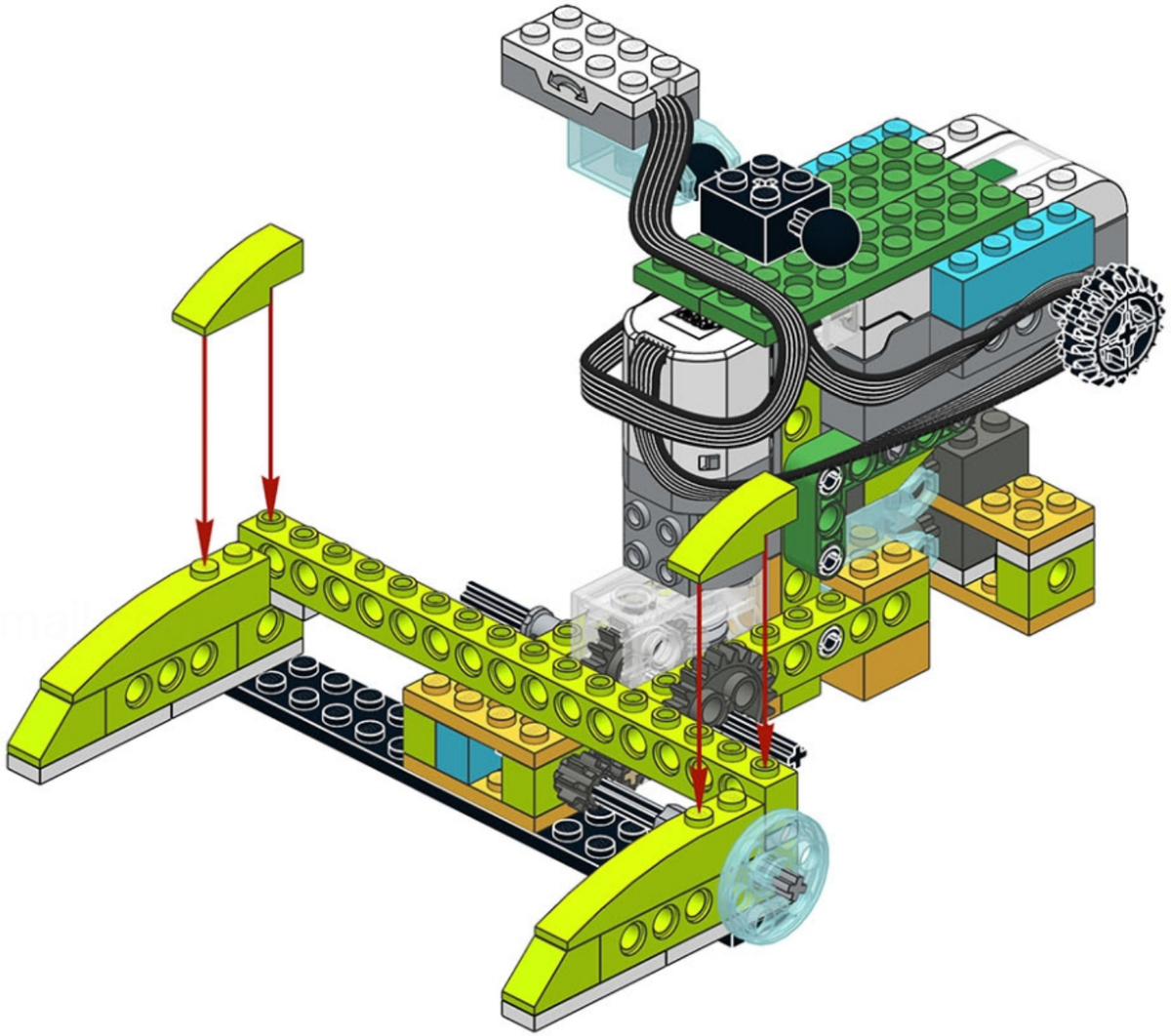

nanka@gmail

ROBORISE-IT!
ROBOTIC EDUCATION

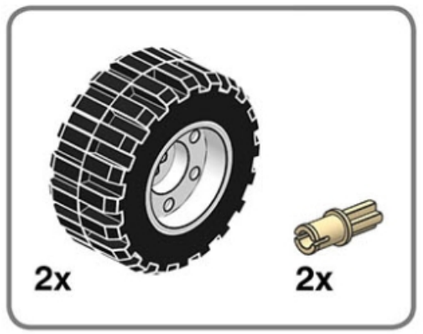

38

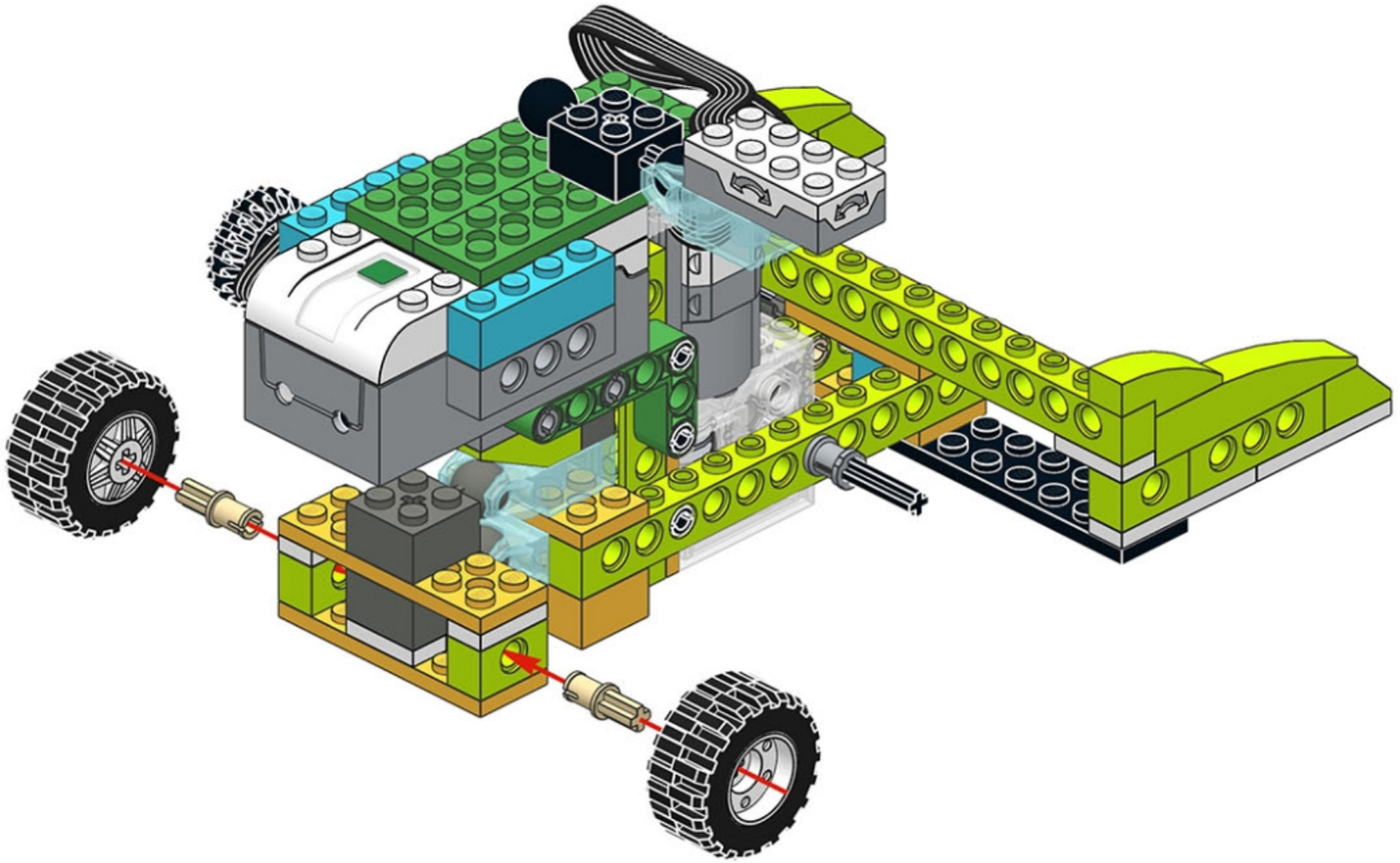

nenka@gmail

ROBORISE-IT!
ROBOTIC EDUCATION

39

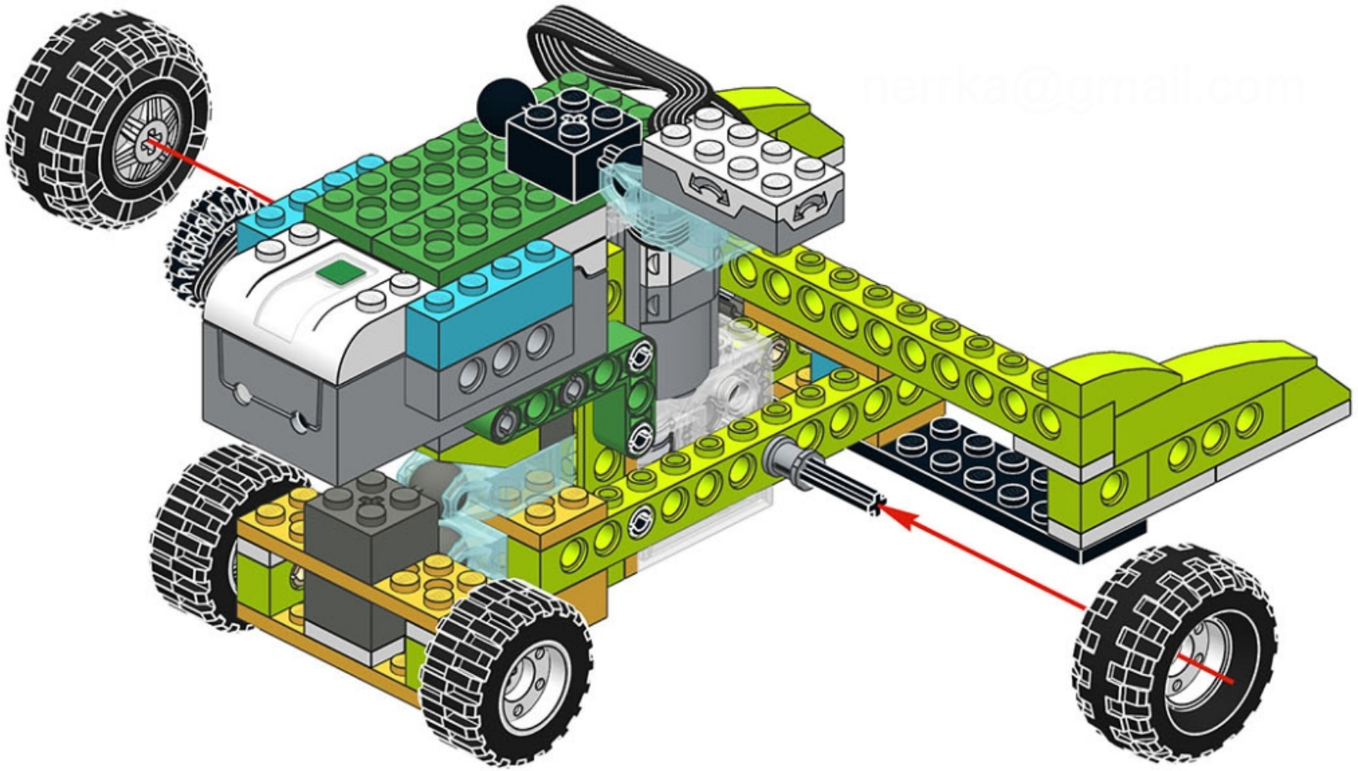

nerka@gmail.com

nerrka@gmail.com

ROBORISE-IT!
ROBOTIC EDUCATION

40

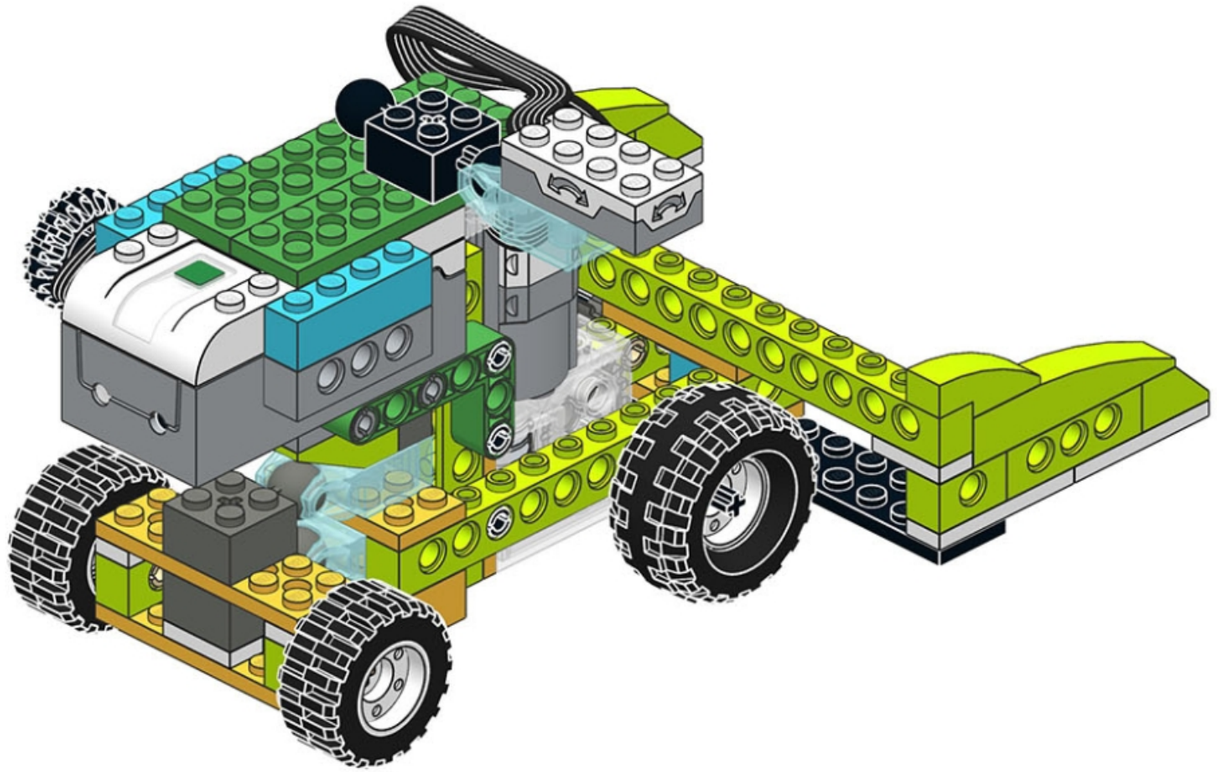

henrka@gmail.com

ROBORISE-IT!
ROBOTIC EDUCATION

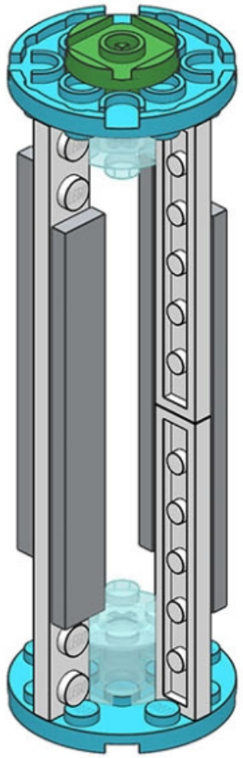

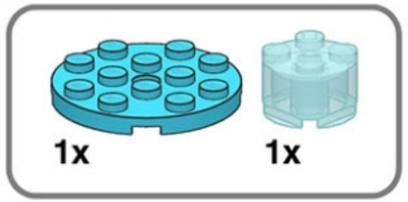

1

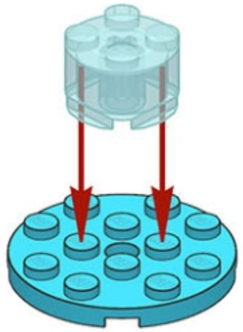

2

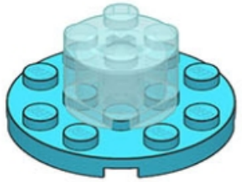

2x

ROBORISE-IT!
ROBOTIC EDUCATION

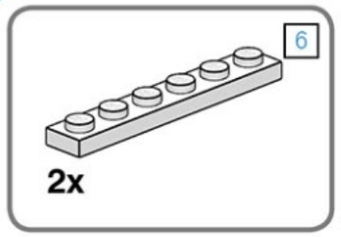

1

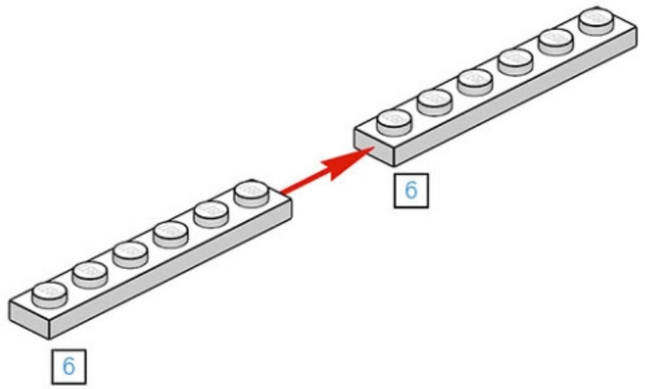

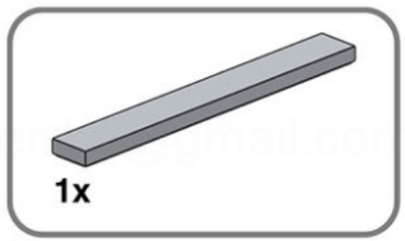

2

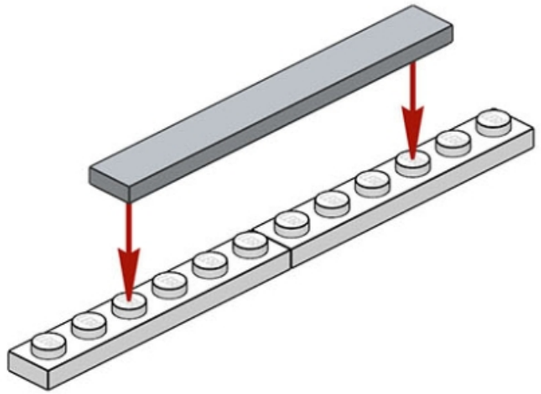

3

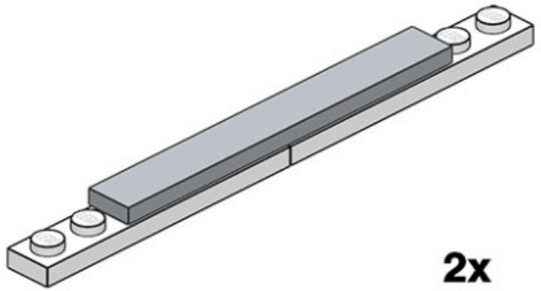

ROBORISE-IT!
ROBOTIC EDUCATION

43

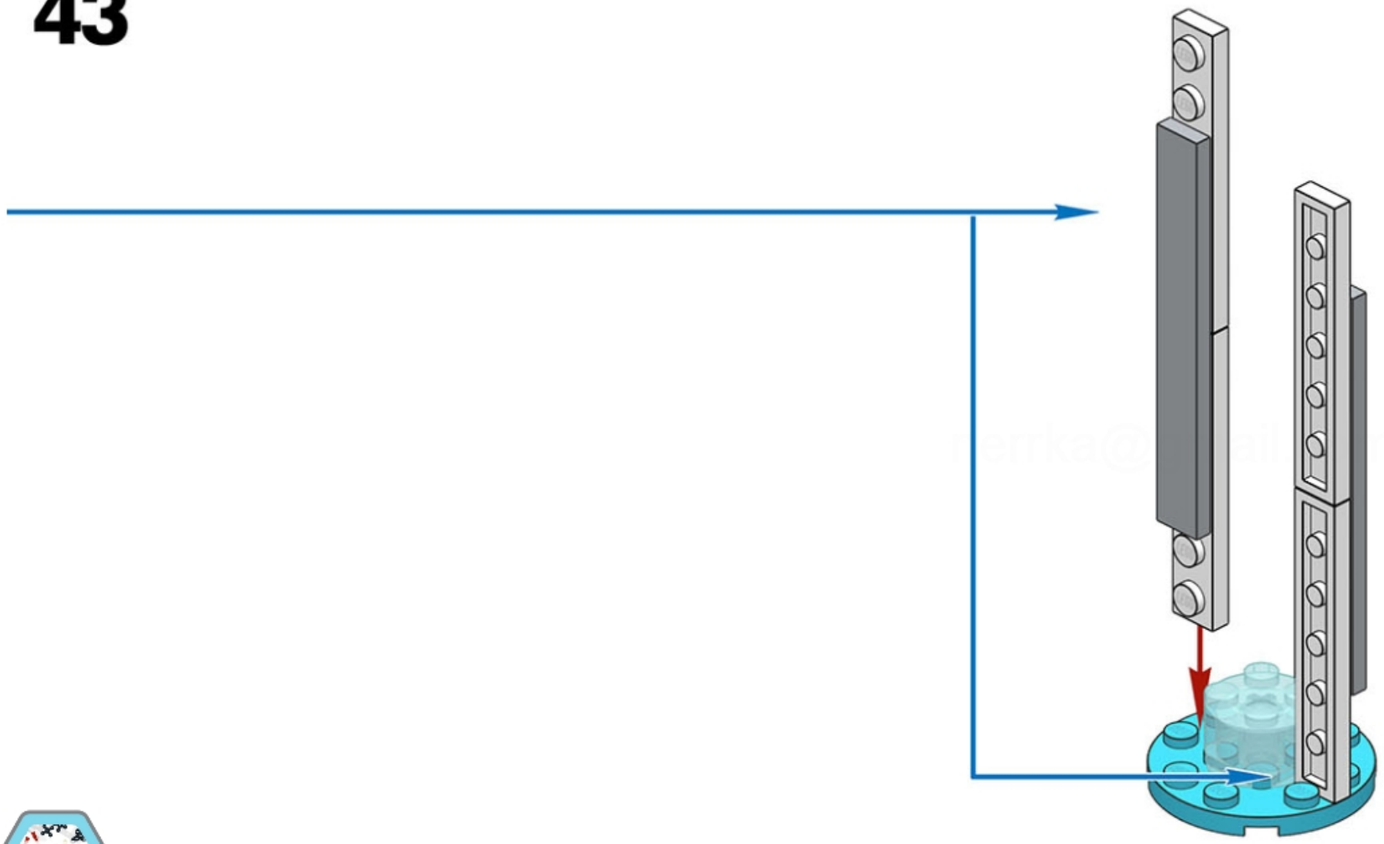

ROBORISE-IT!
ROBOTIC EDUCATION

44

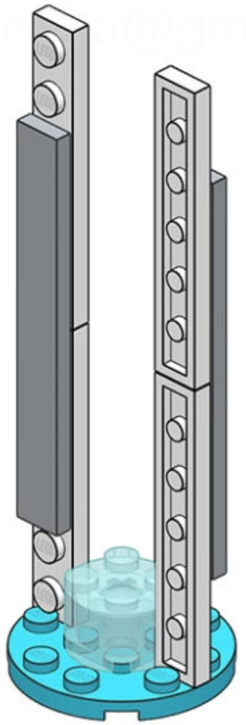

44/52

0

64

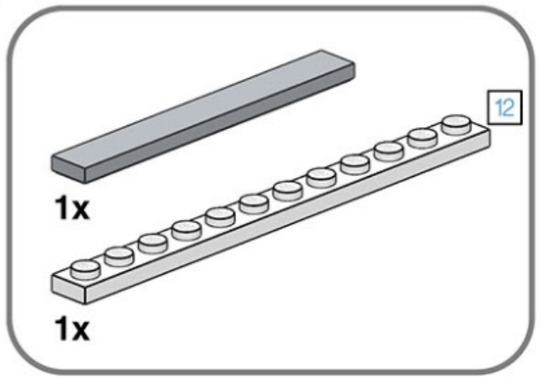

1

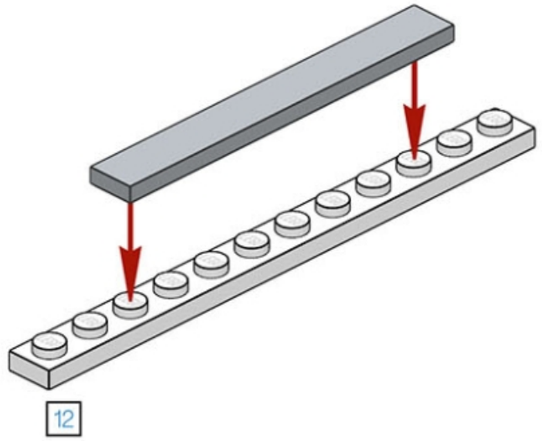

2

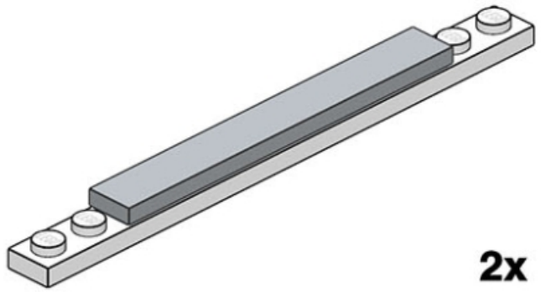

narrka@gmail.com

nerrka@gmail.com

ROBORISE-IT!
ROBOTIC EDUCATION

46

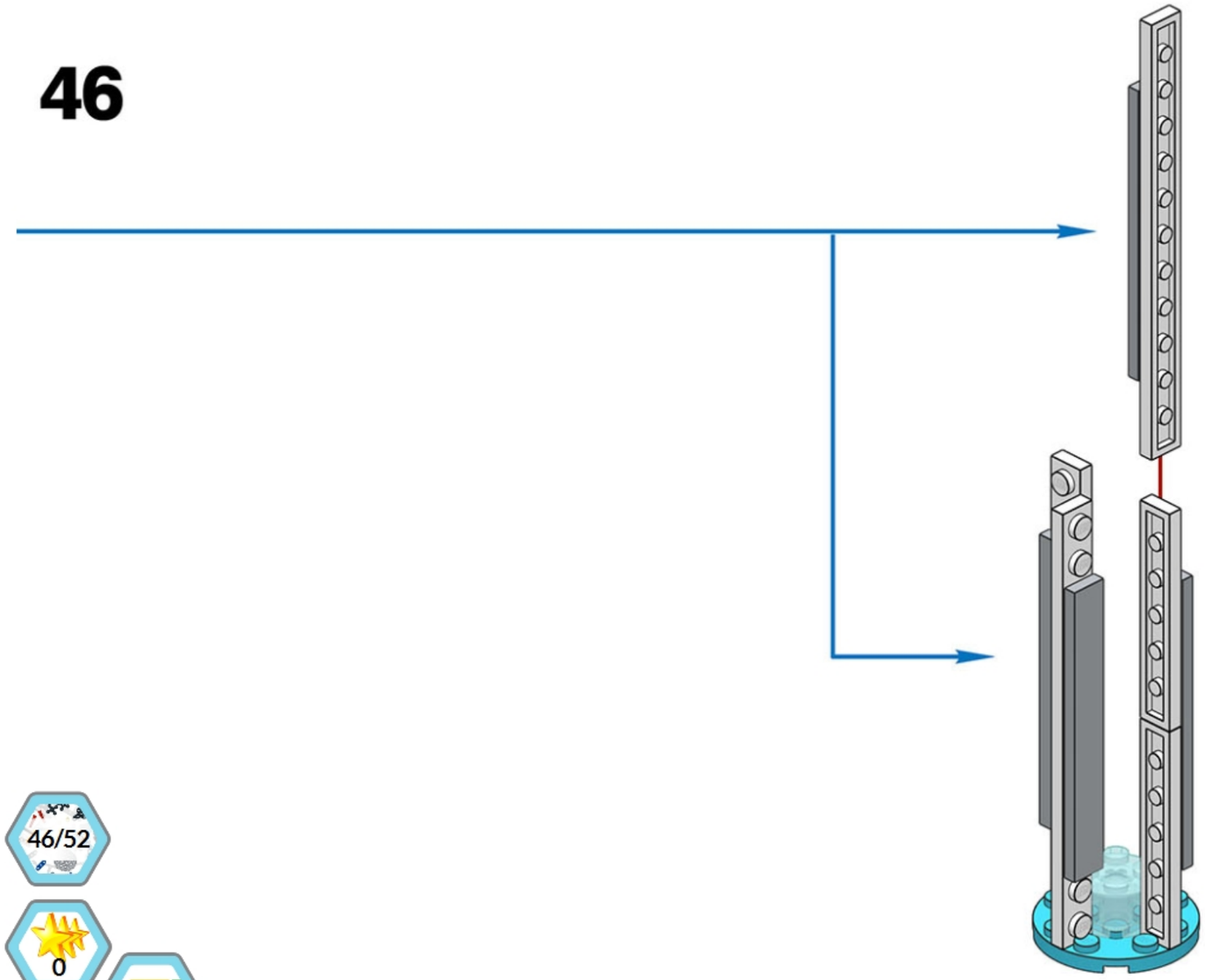

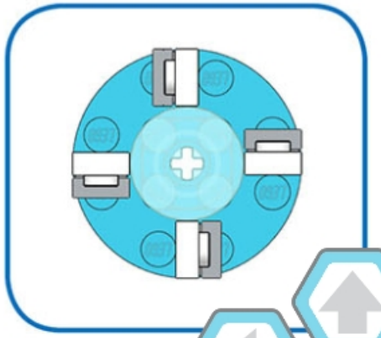

ROBORISE-IT!
ROBOTIC EDUCATION

47

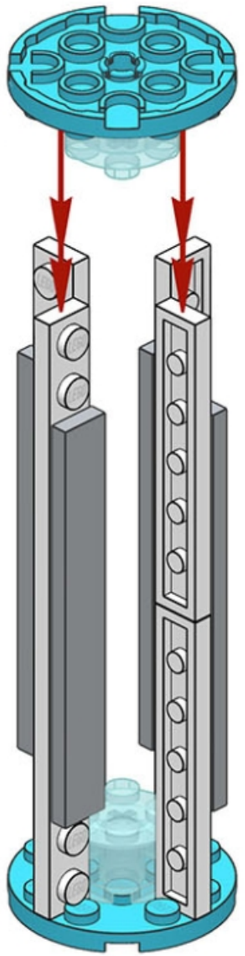

nerrka@gmail.com

ROBORISE-IT!
ROBOTIC EDUCATION

48

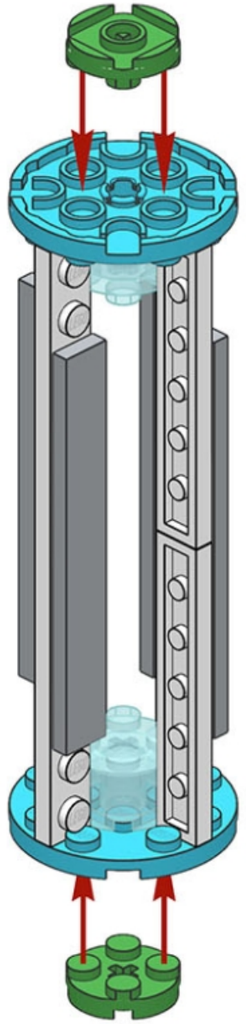

nerika@gmail.com

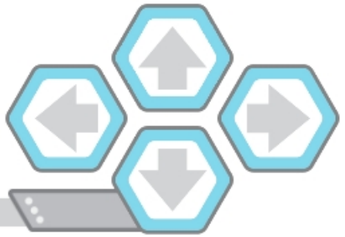

ROBORISE-IT!
ROBOTIC EDUCATION

49

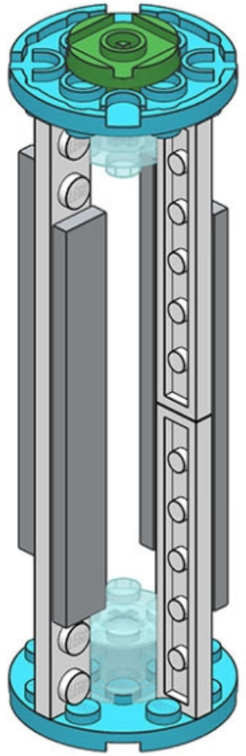

nerka@gmail.com

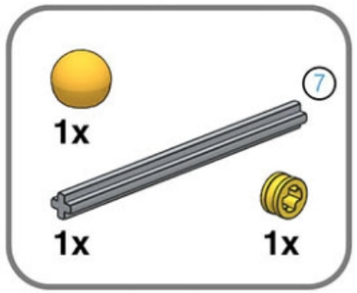

50

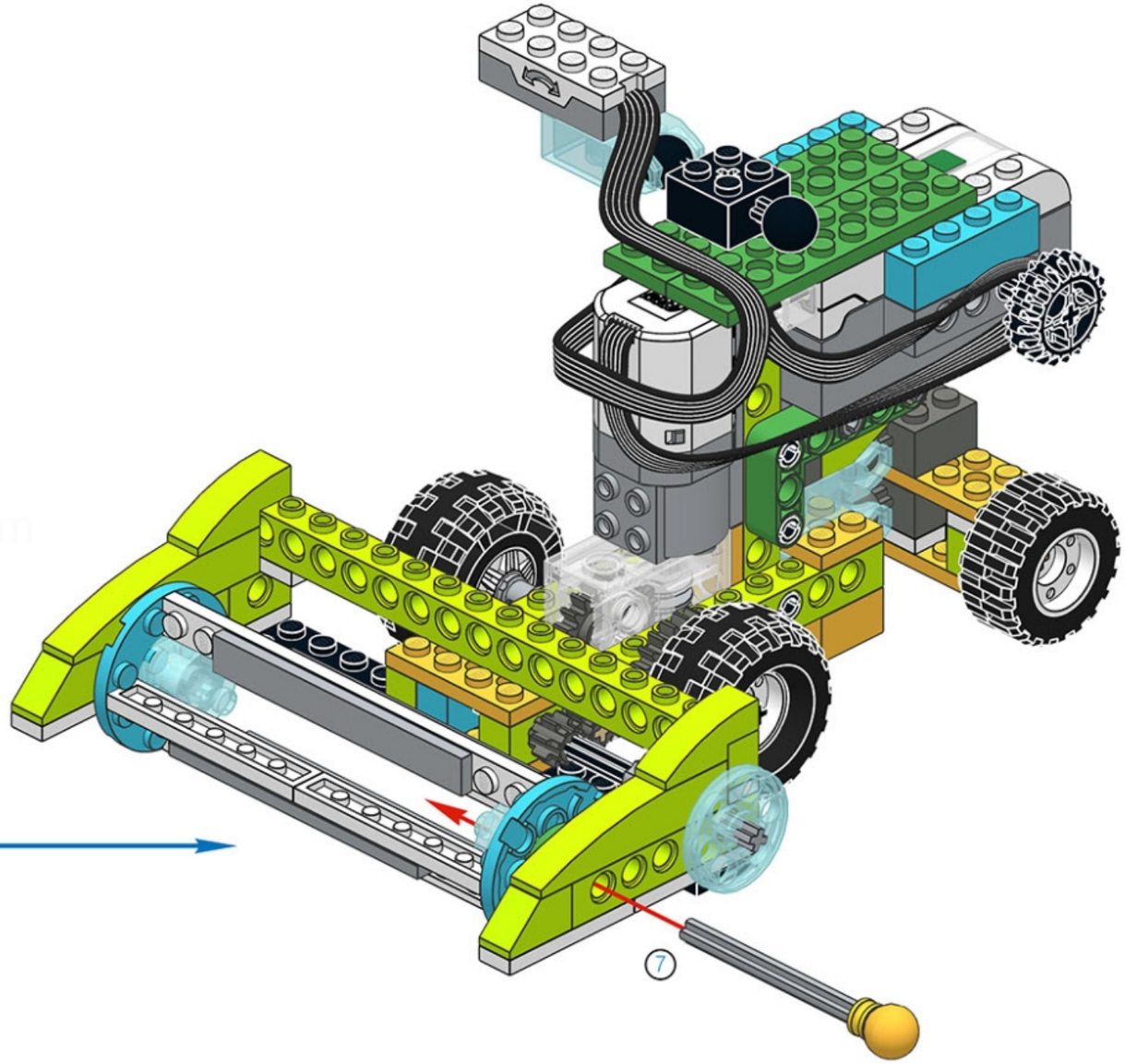

ROBORISE-IT!
ROBOTIC EDUCATION

50/52
0
70

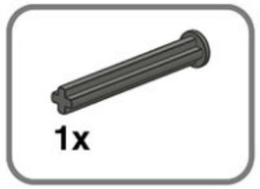

51

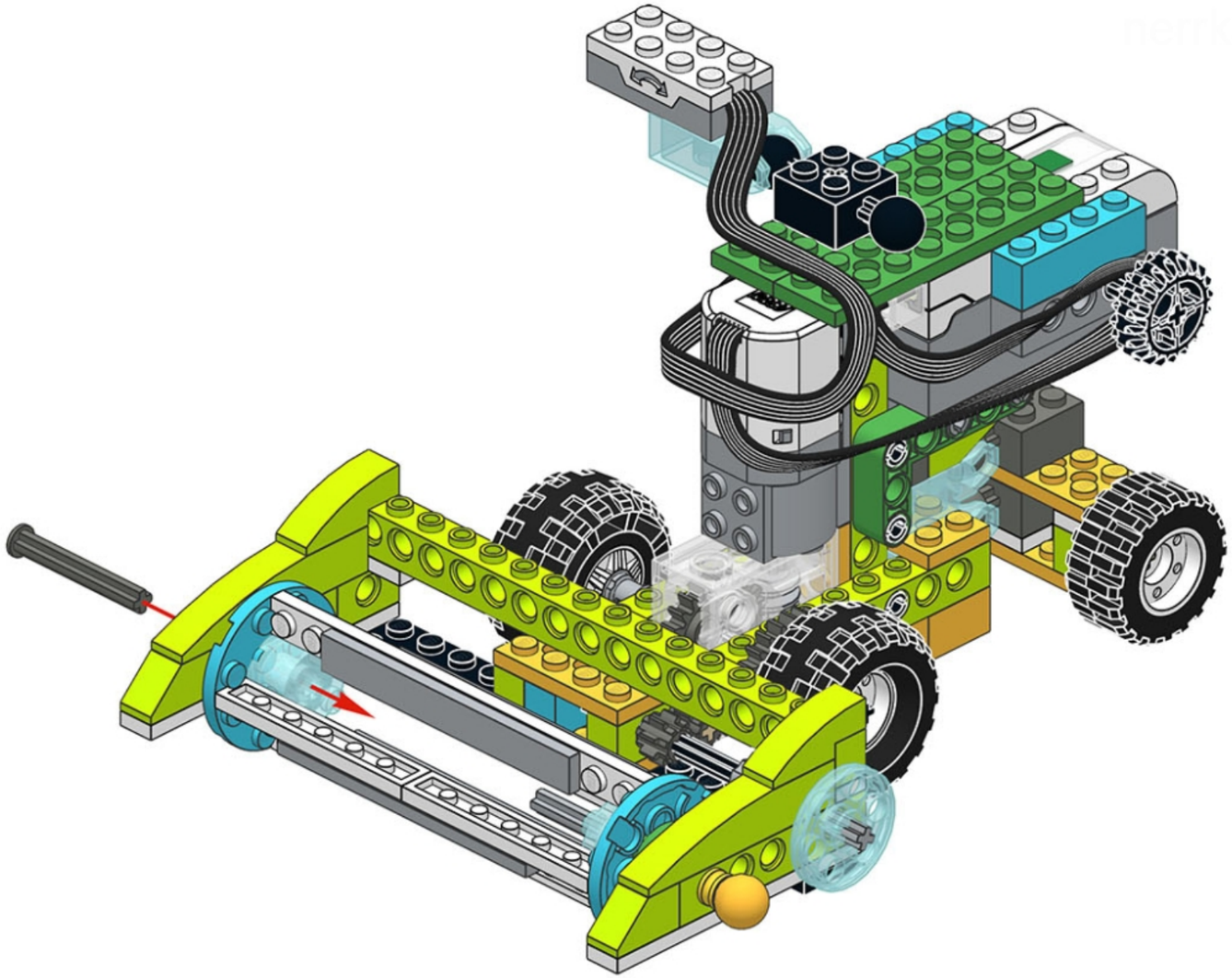

ROBORISE-IT!
ROBOTIC EDUCATION

ROBORISE-IT!
ROBOTIC EDUCATION

1x

52

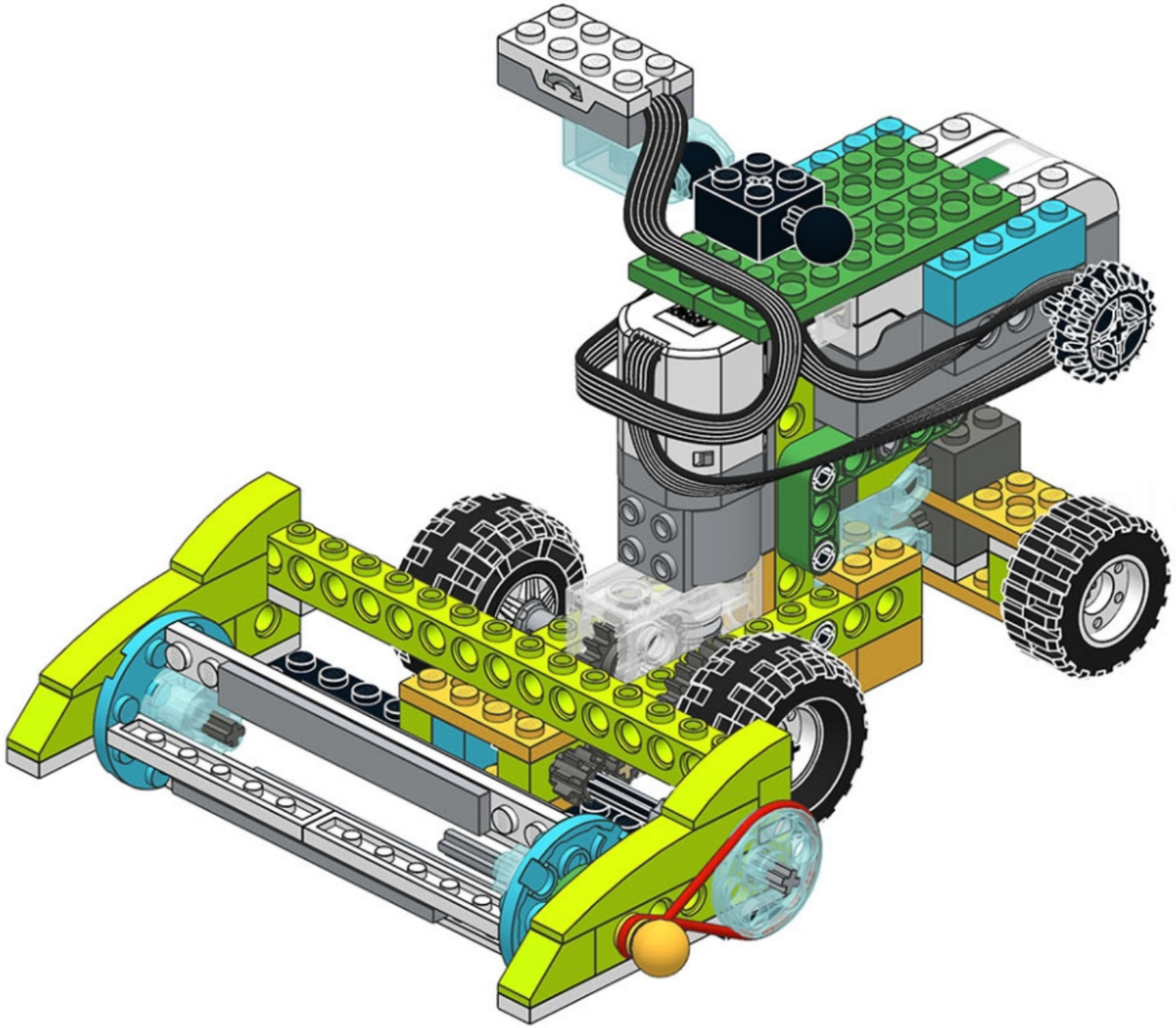

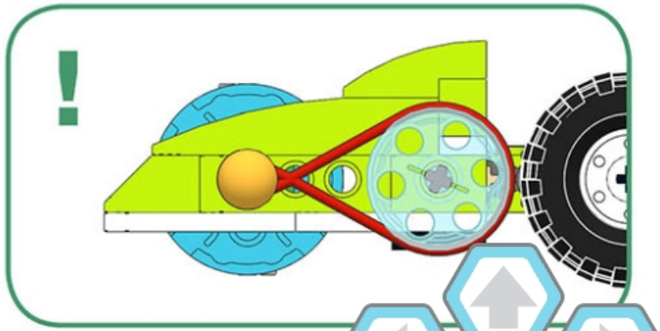

52/52

0

72

Enhanced version

ROBORISE-IT!
ROBOTIC EDUCATION

Add the cabin, unloading auger and some visual improvements to your robot!

0

73

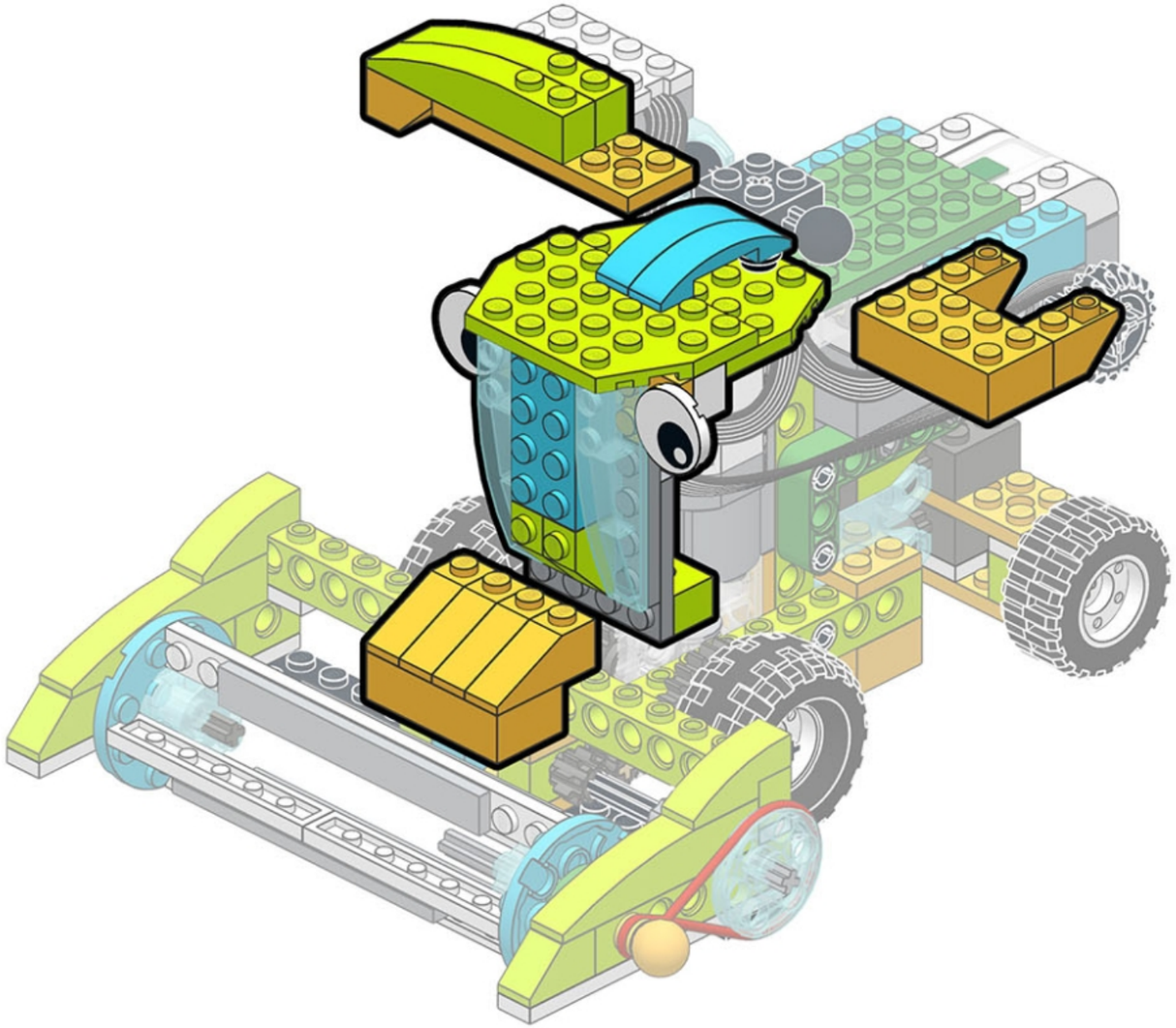

ROBORISE-IT!
ROBOTIC EDUCATION

1/13

0

74

ROBORISE-IT!
ROBOTIC EDUCATION

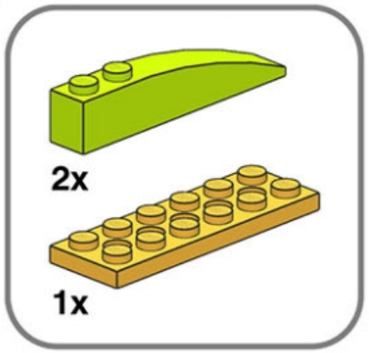

1

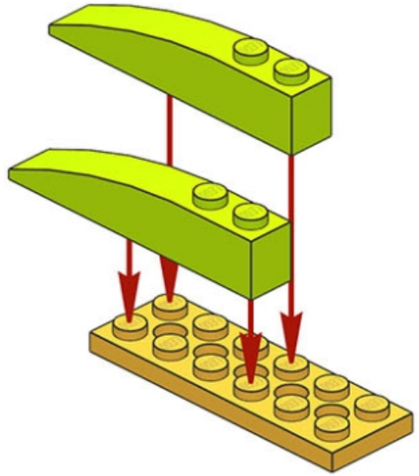

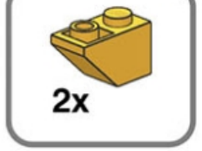

2

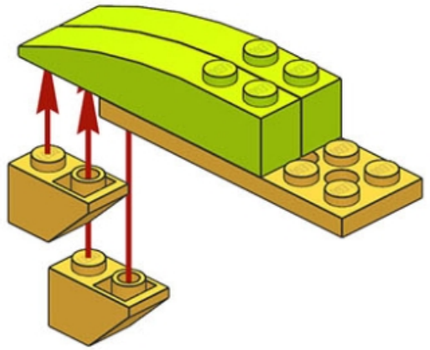

3

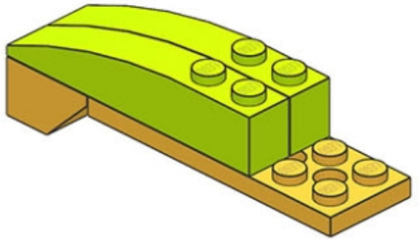

2/13

0

75

ROBORISE-IT!
ROBOTIC EDUCATION

54

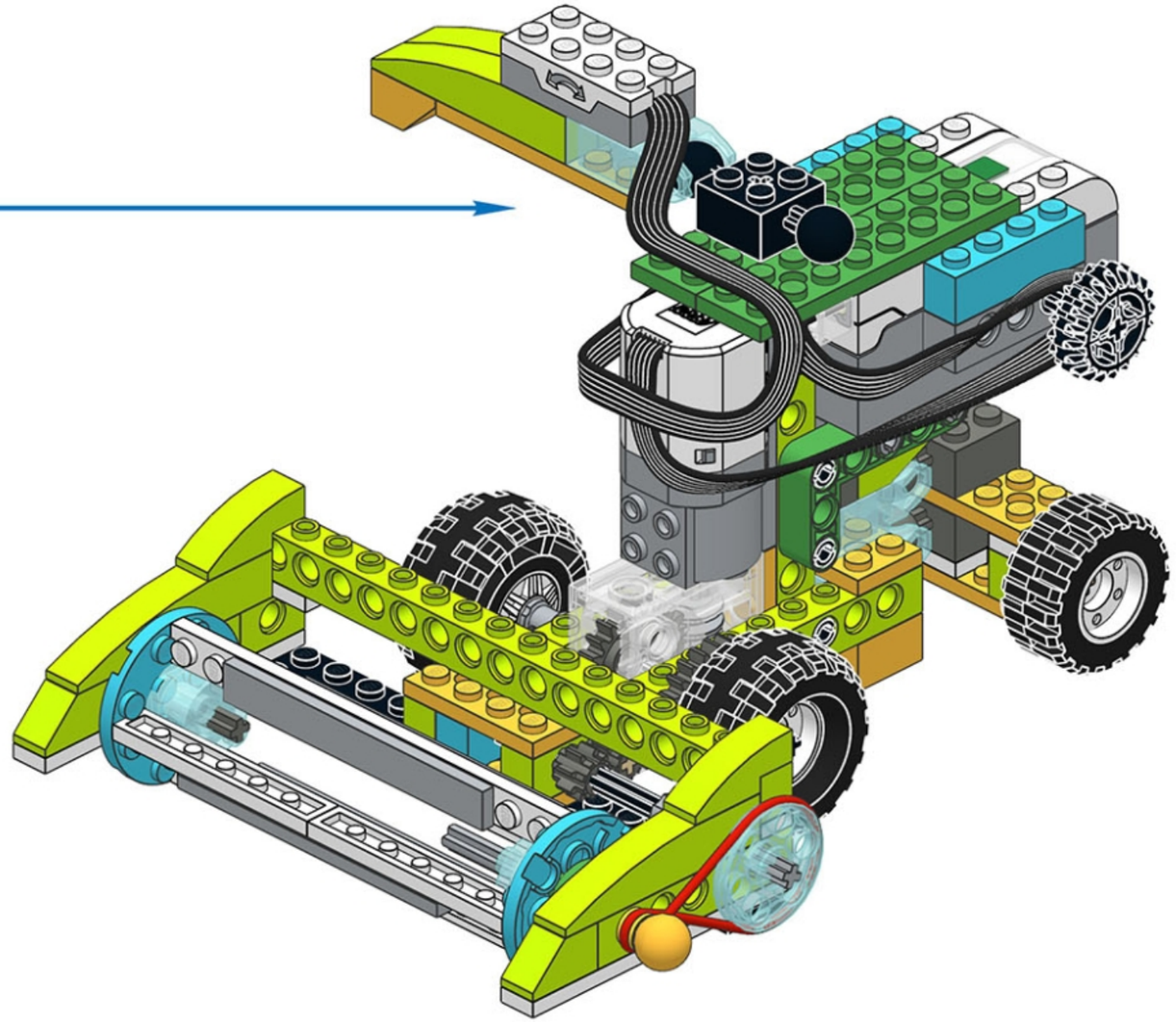

3/13

0

76

ROBORISE-IT!
ROBOTIC EDUCATION

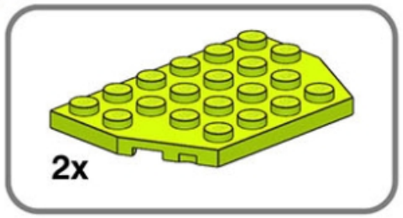

1

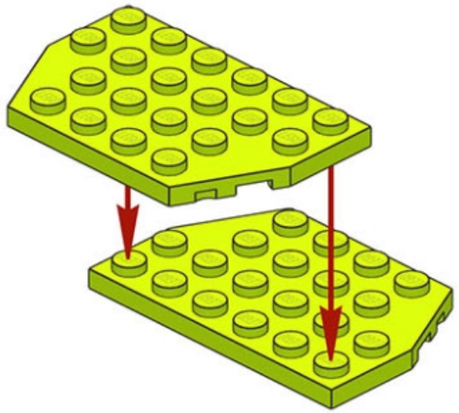

2

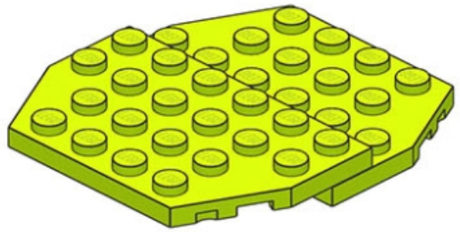

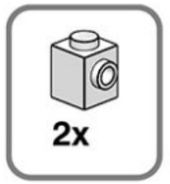

3

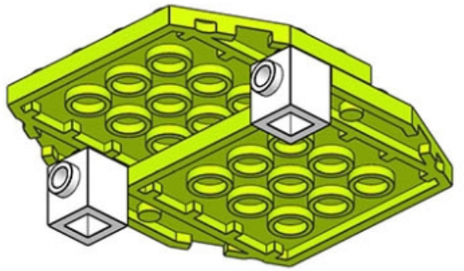

nerka@gmail.com

ROBORISE-IT!
ROBOTIC EDUCATION

4

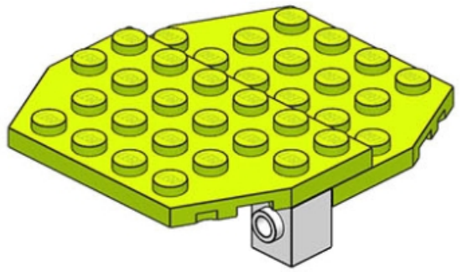

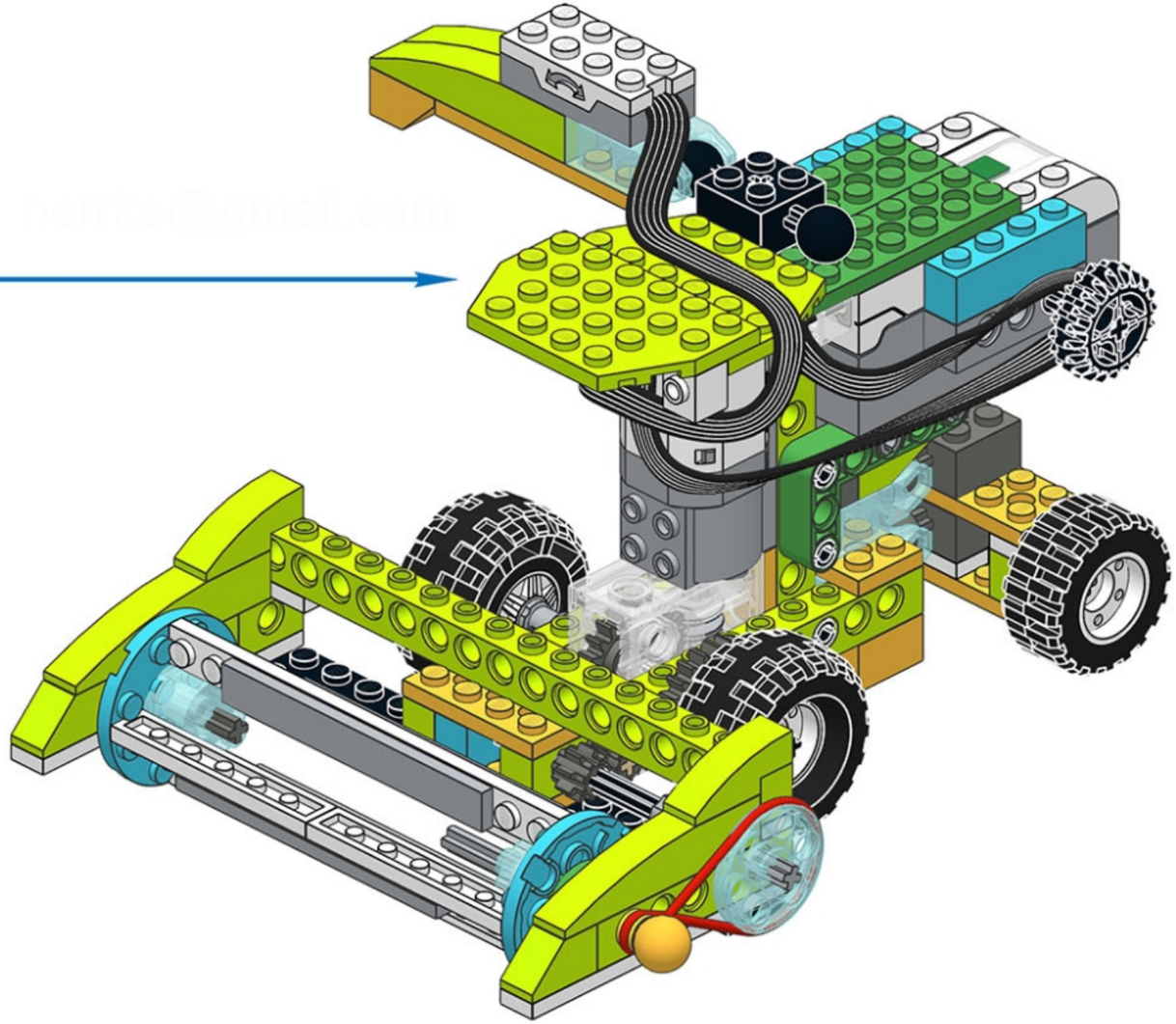

nerrka@gmail.com

5/13

0

78

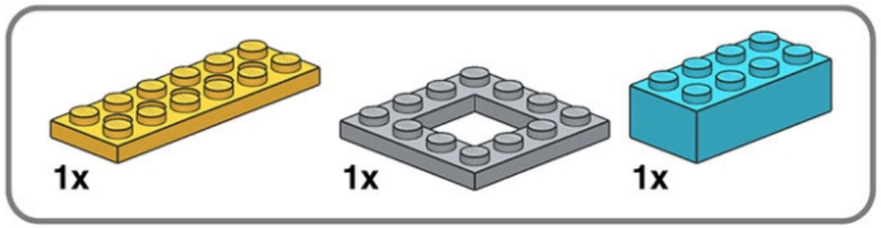

1

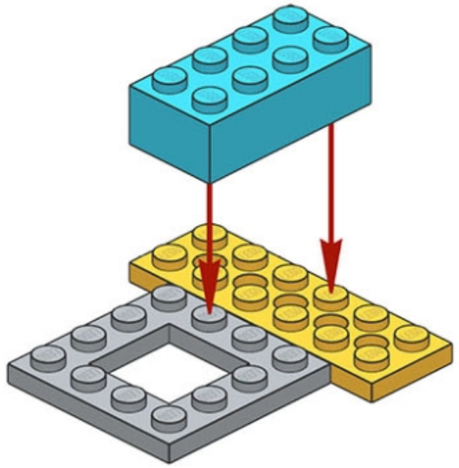

2

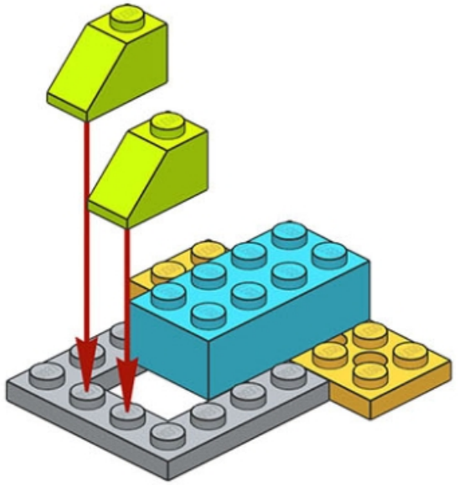

ROBORISE-IT!
ROBOTIC EDUCATION

2x

3

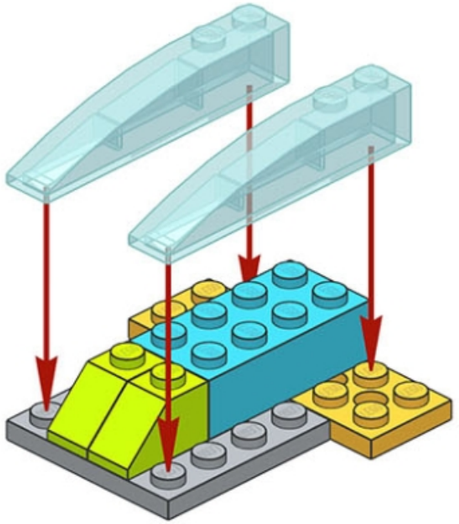

4

1x

1x

4

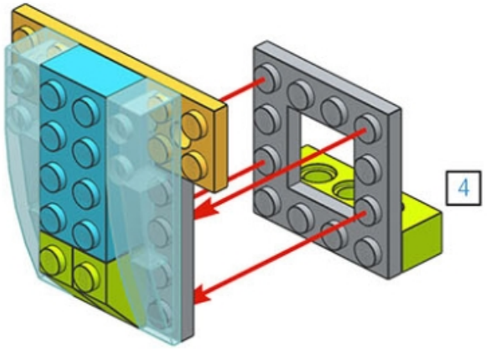

2x

5

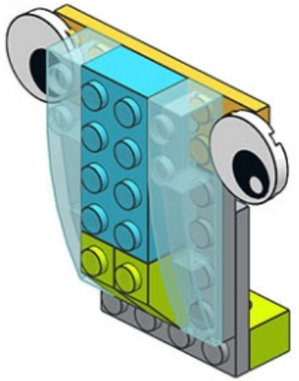

7/13

0

80

ROBORISE-IT!
ROBOTIC EDUCATION

nerrka@gmail.com

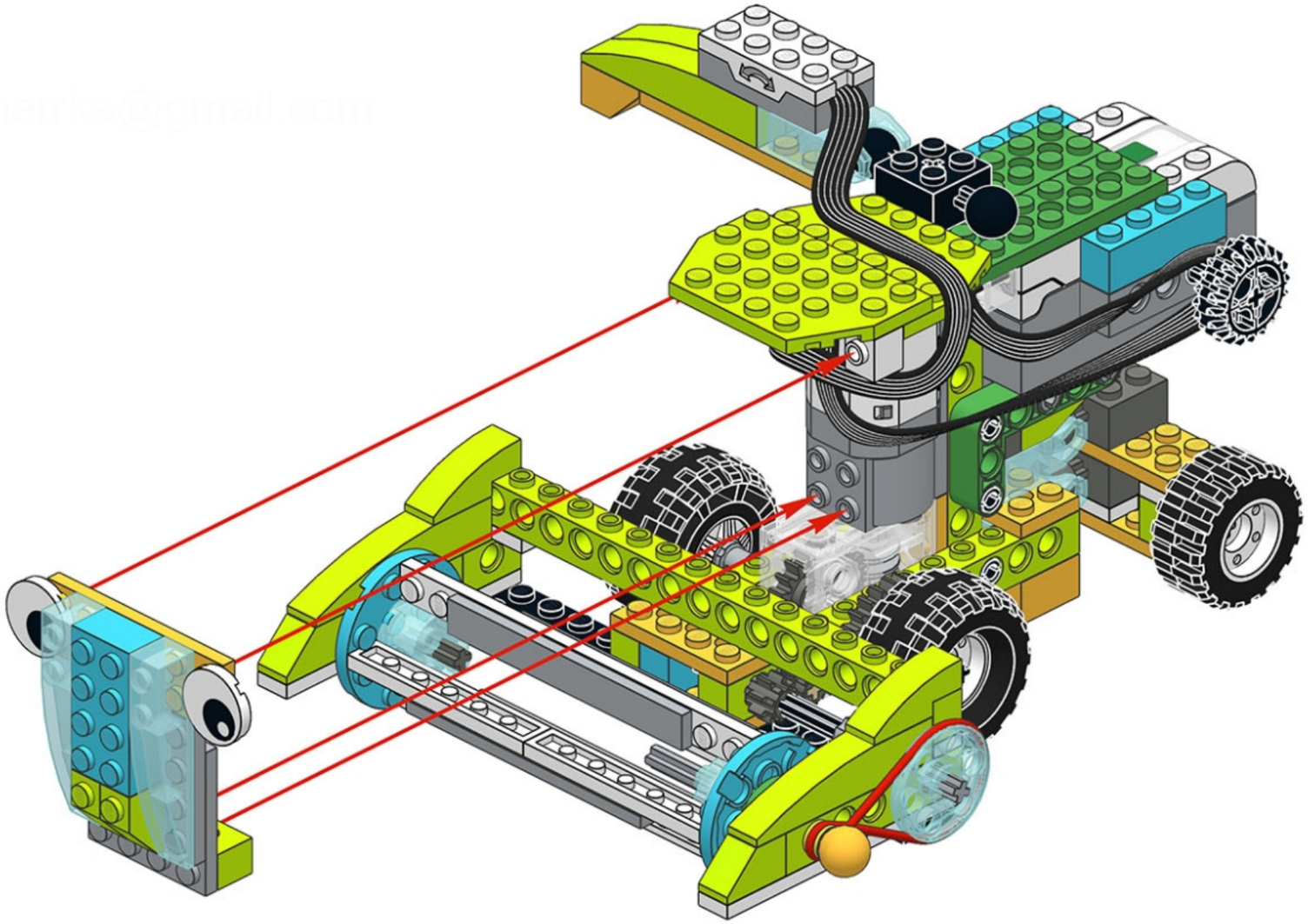

nerka@gmail.com

ROBORISE-IT!
ROBOTIC EDUCATION

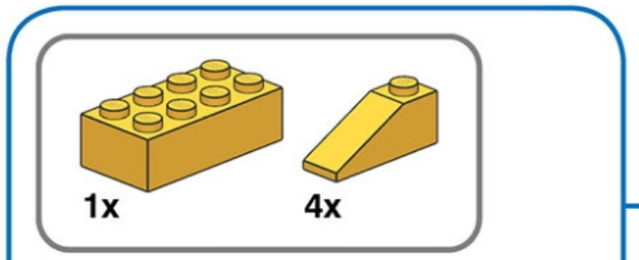

1

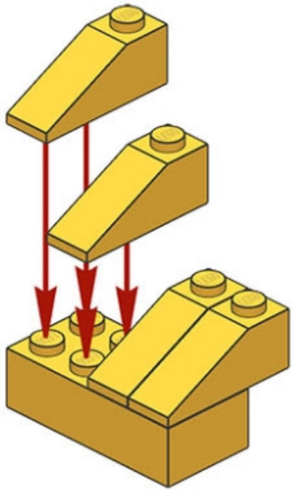

2

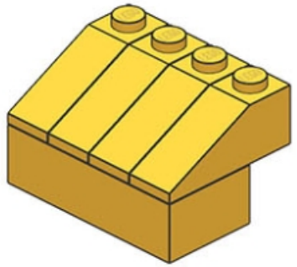

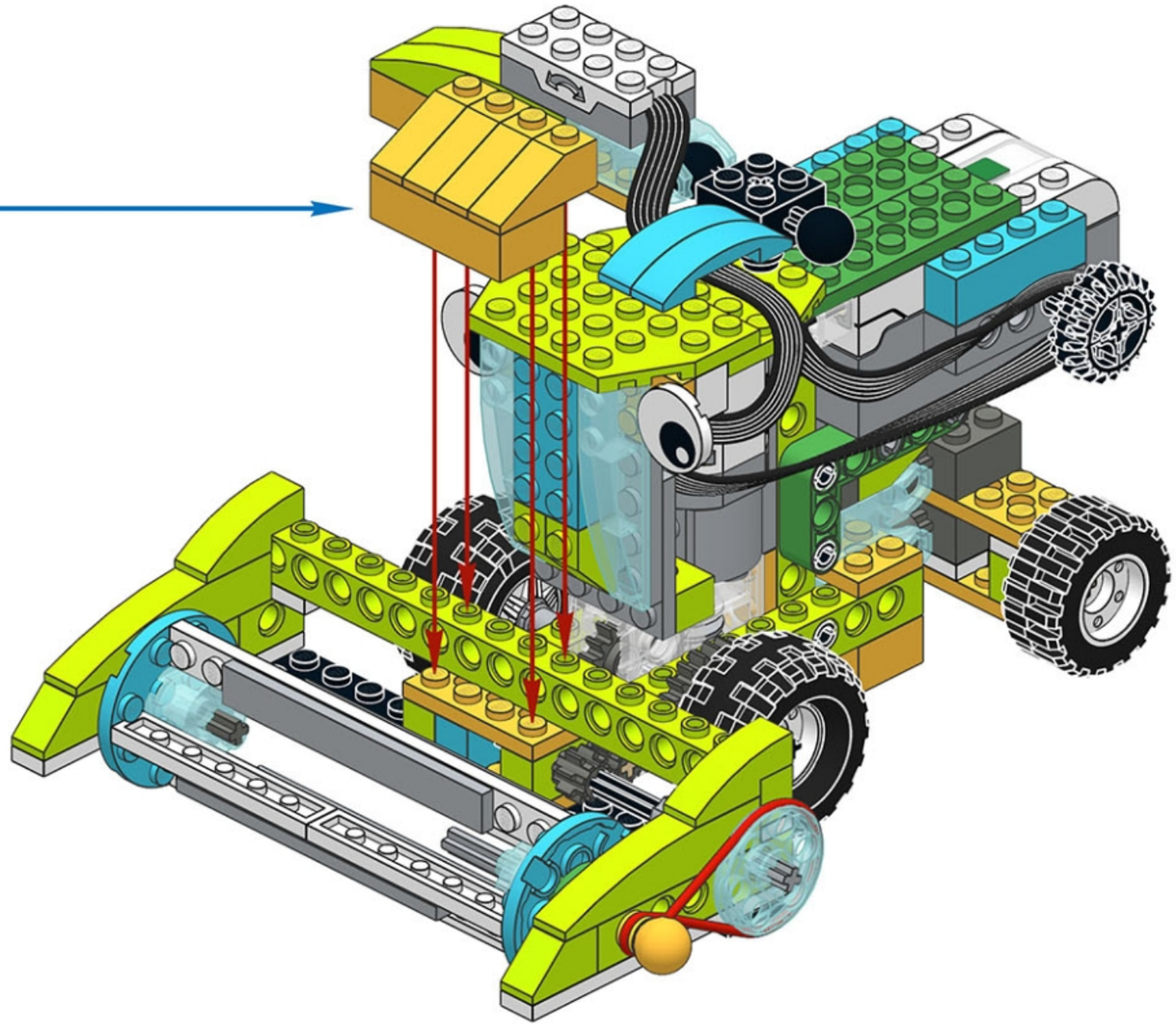

9/13

0

82

ROBORISE-IT!
ROBOTIC EDUCATION

61

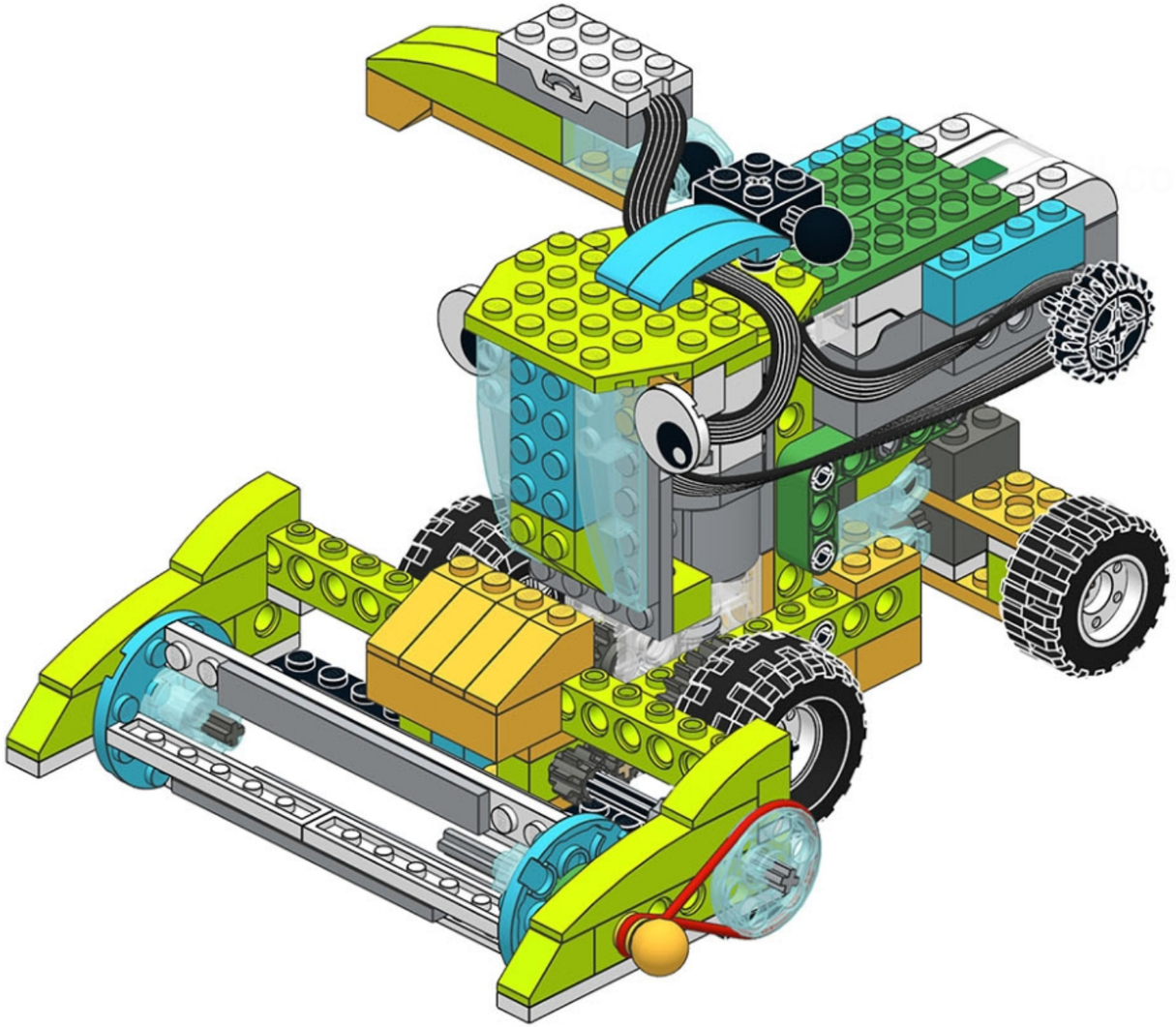

10/13

0

83

ROBORISE-IT!
ROBOTIC EDUCATION

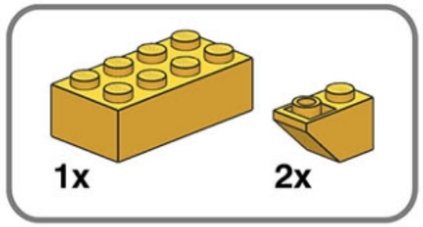

62

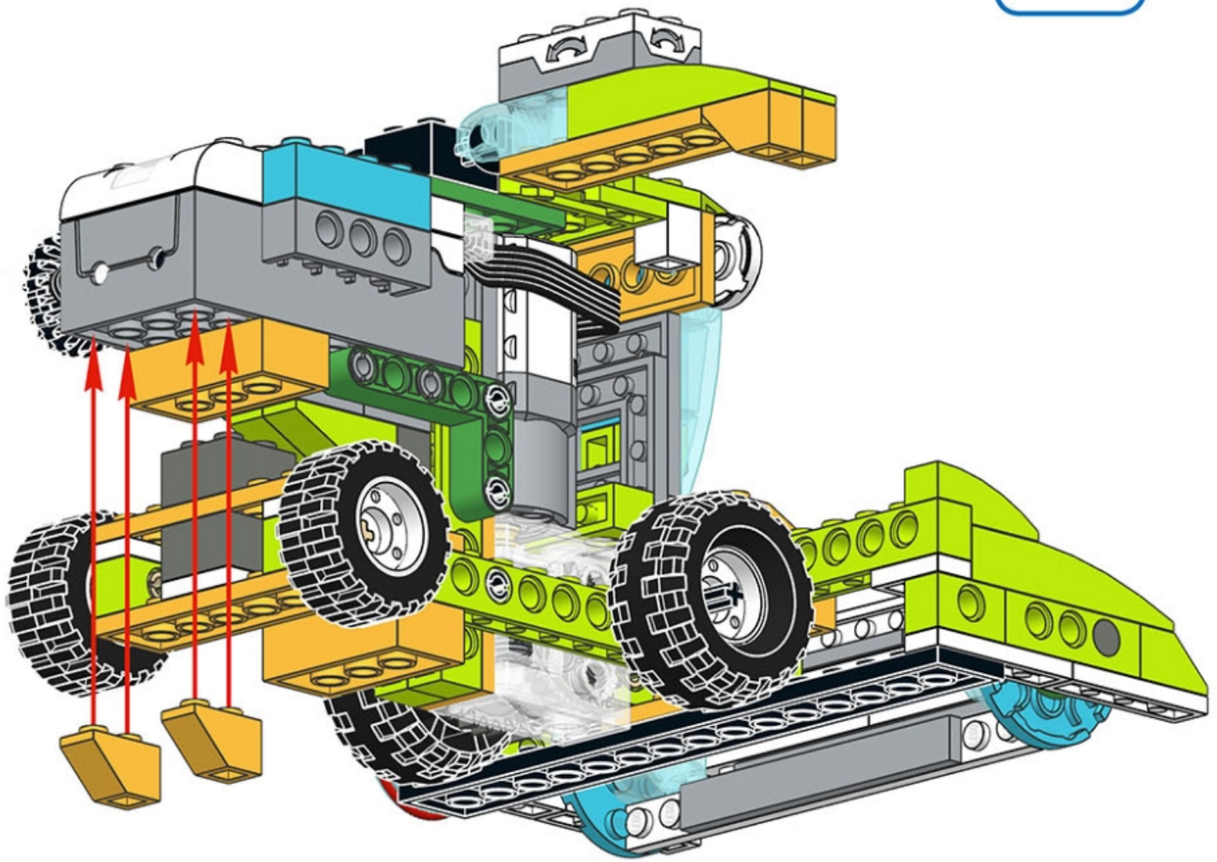

11/13

0

84

ROBORISE-IT!
ROBOTIC EDUCATION

63

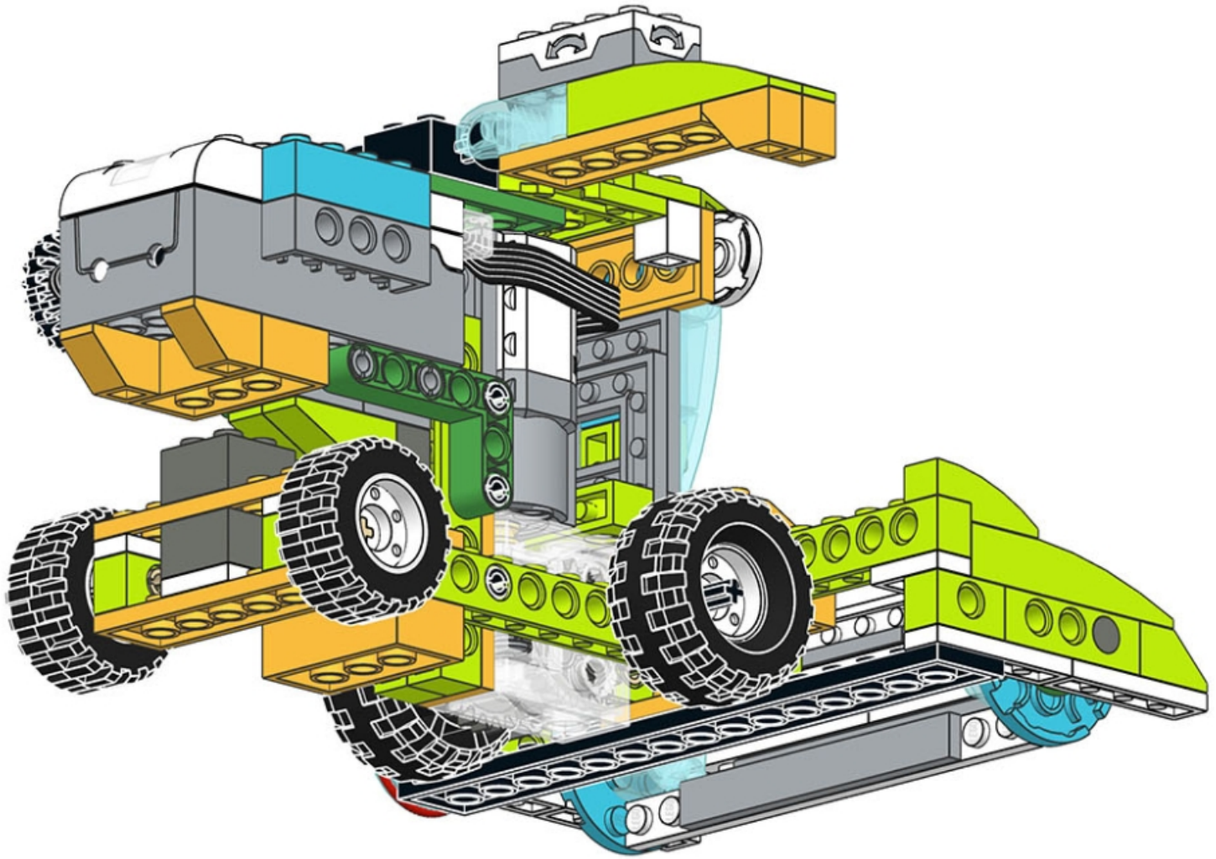

12/13

0

85

nerka@gmail.com

ROBORISE-IT!
ROBOTIC EDUCATION

64

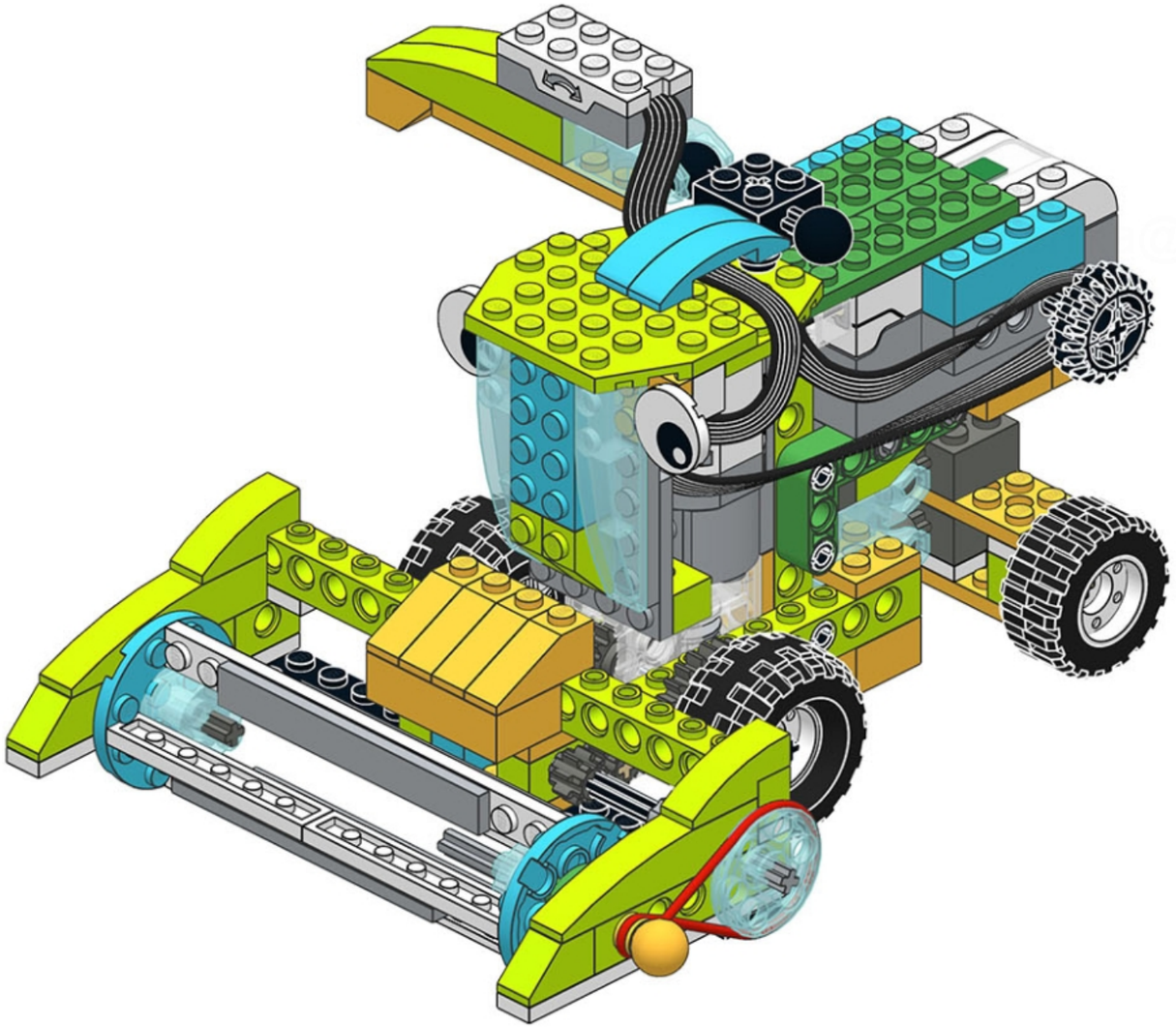

13/13

0

86

ROBORISE-IT!
ROBOTIC EDUCATION

1x

65

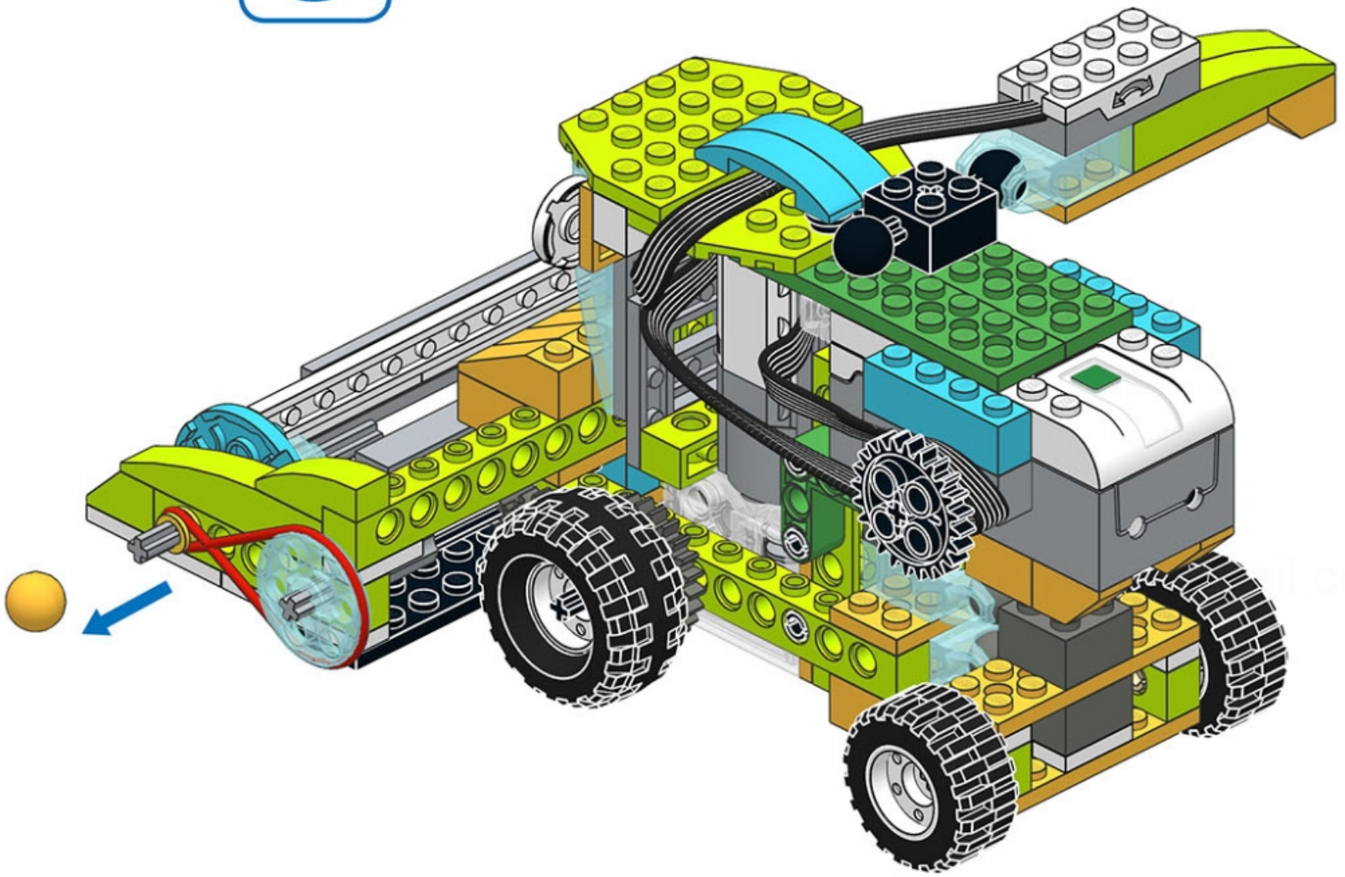

1/4

0

94

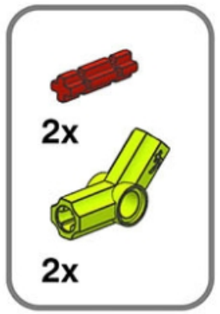

66

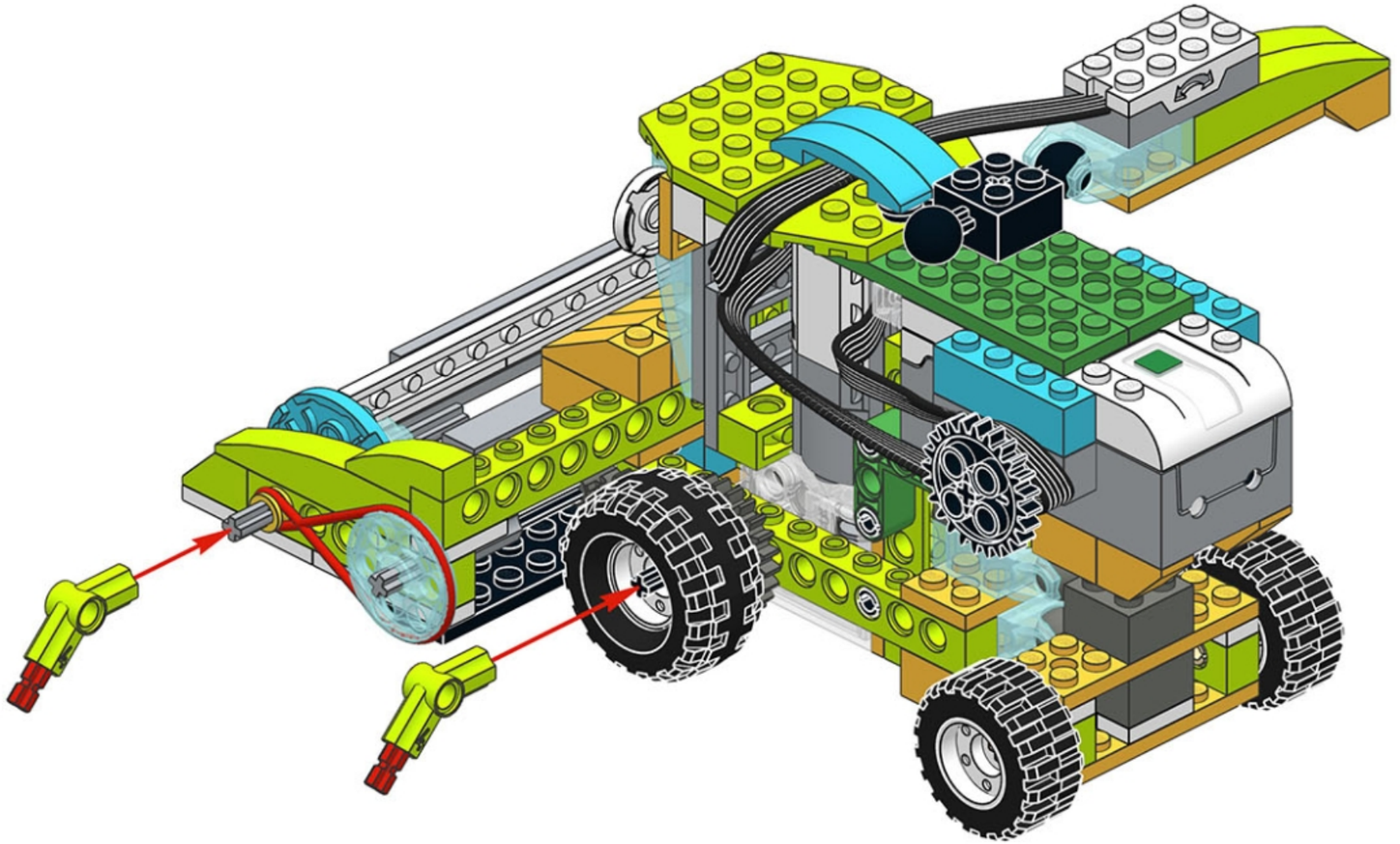

ROBORISE-IT!
ROBOTIC EDUCATION

67

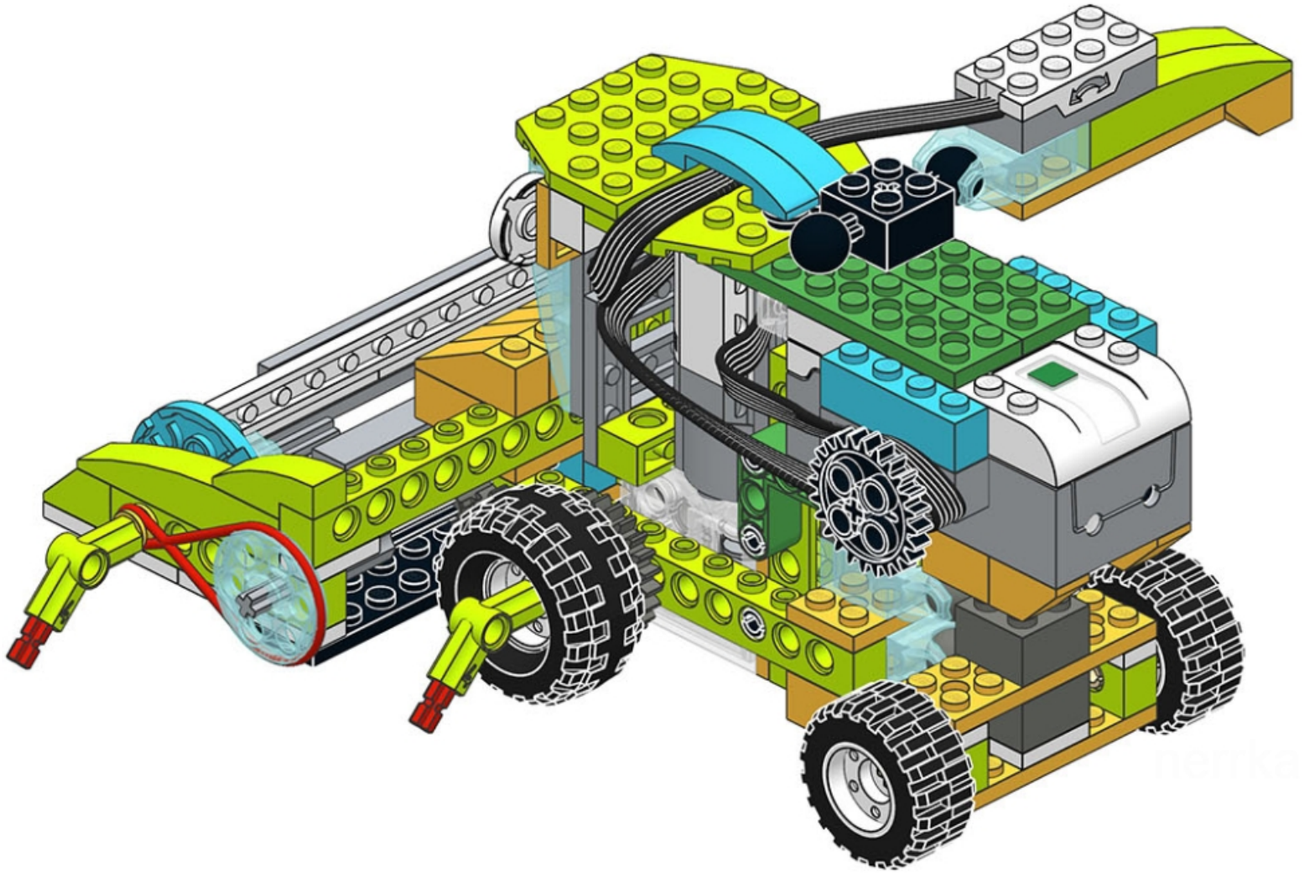

herrka@gmail.com

ROBORISE-IT!
ROBOTIC EDUCATION

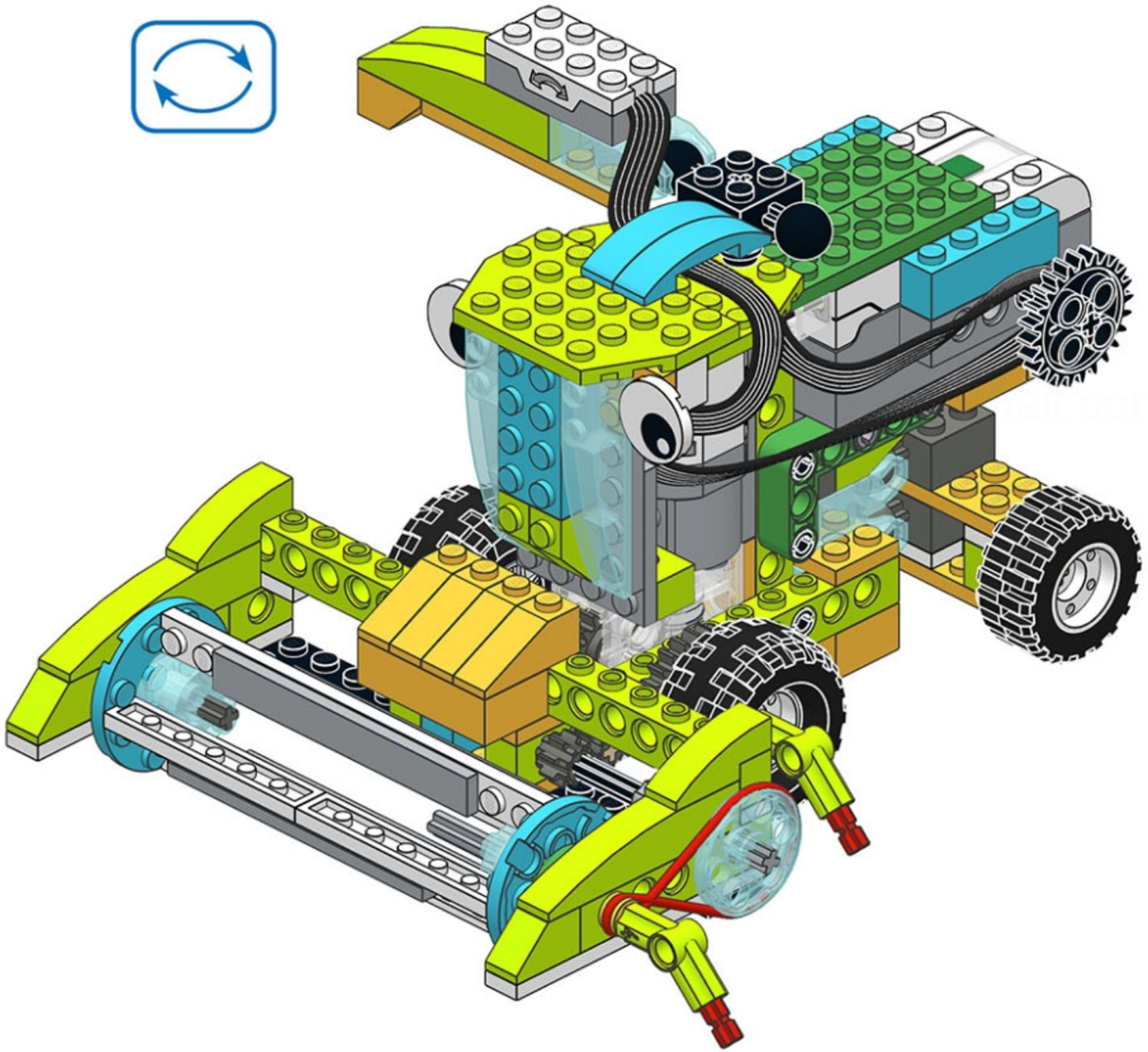

Build the robot!

ROBORISE-IT!
ROBOTIC EDUCATION

0

20

ROBORISE-IT!
ROBOTIC EDUCATION

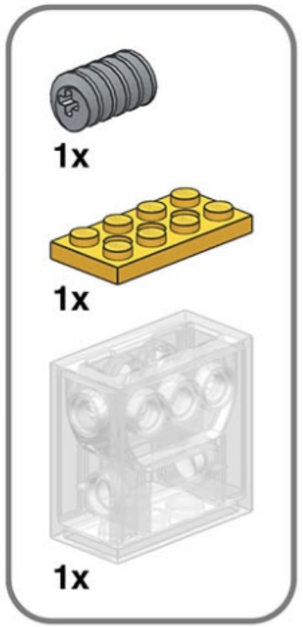

1

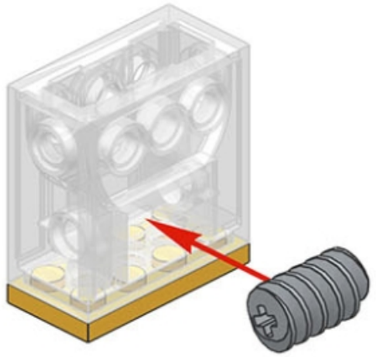

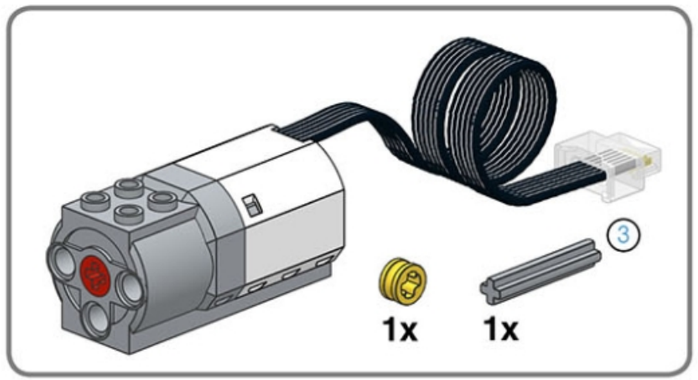

2

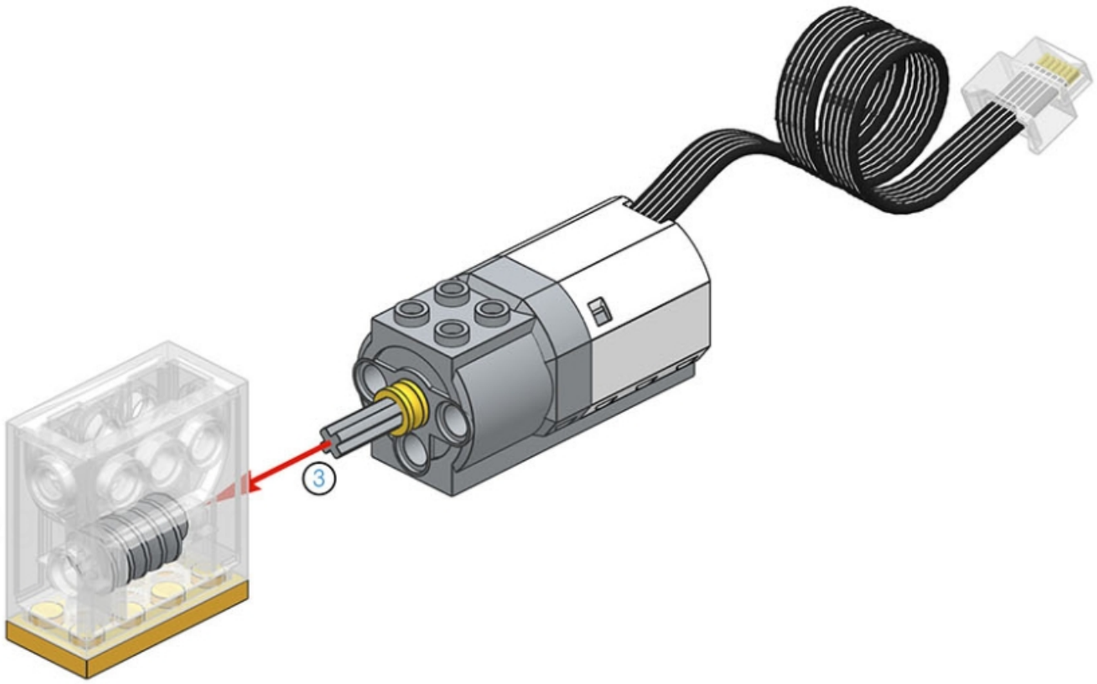

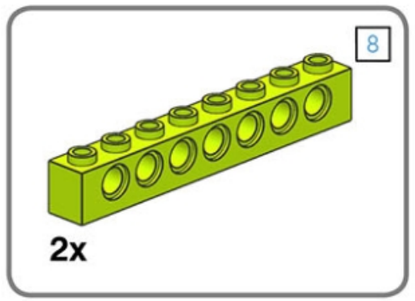

3

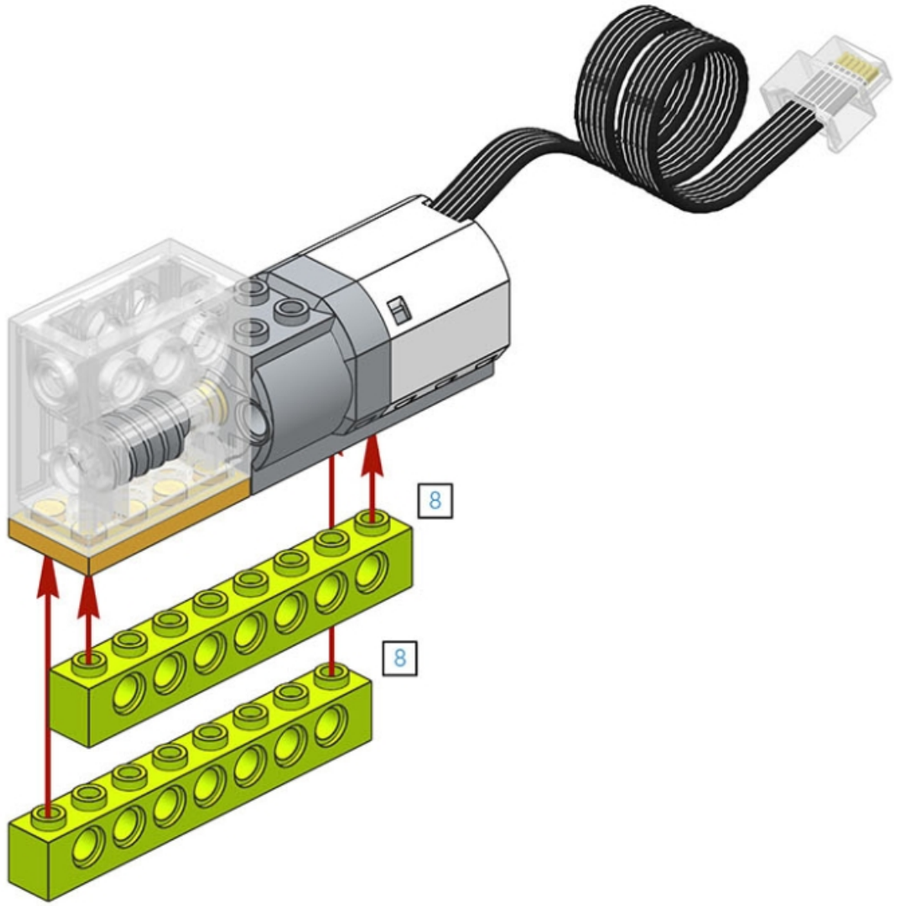

ROBORISE-IT!
ROBOTIC EDUCATION
nerrka@gmail.com

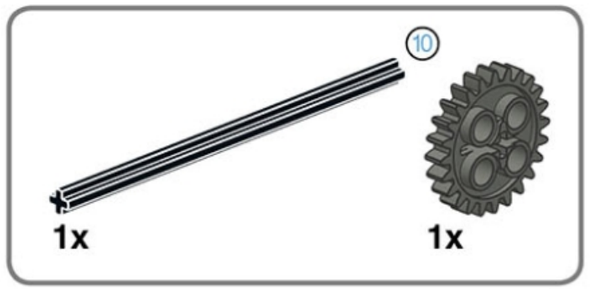

4

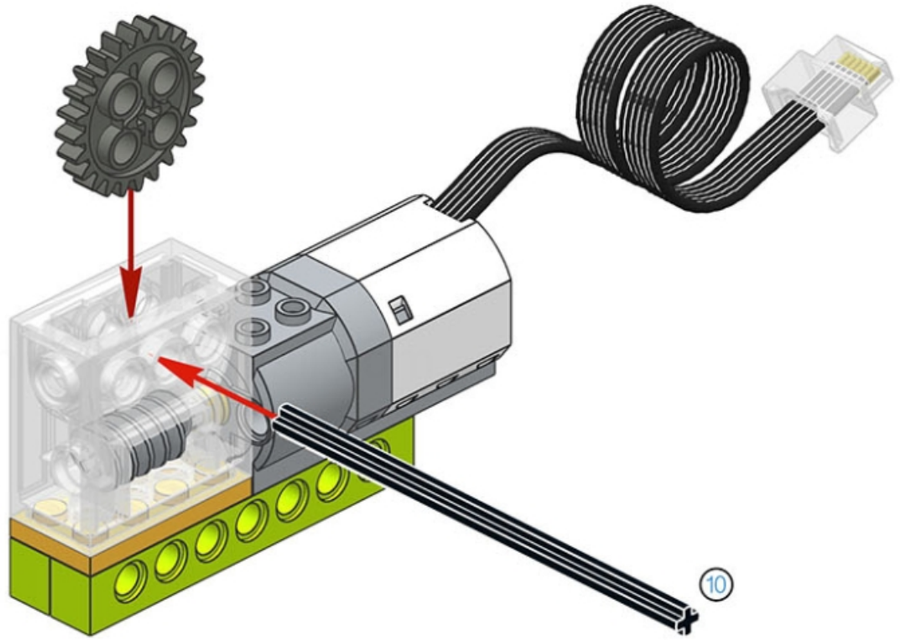

ROBORISE-IT!
ROBOTIC EDUCATION

2x

5

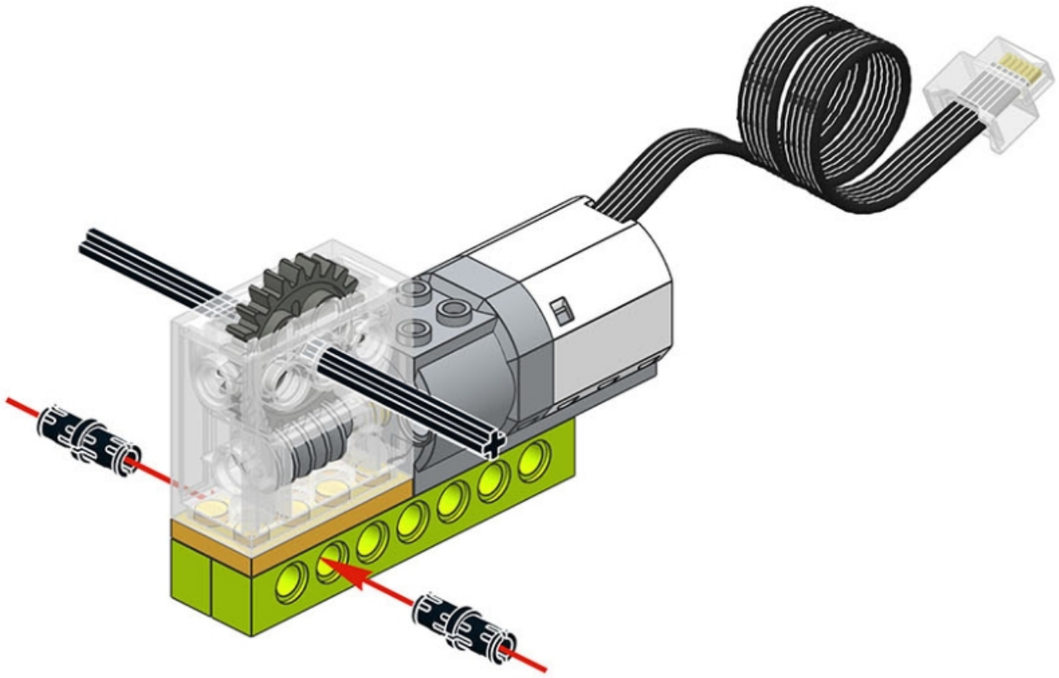

nerrka@gmail.com

5/52

0

25

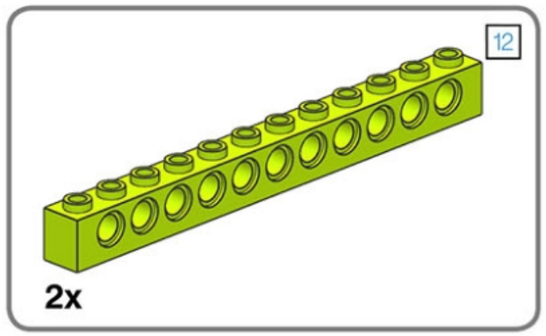

6

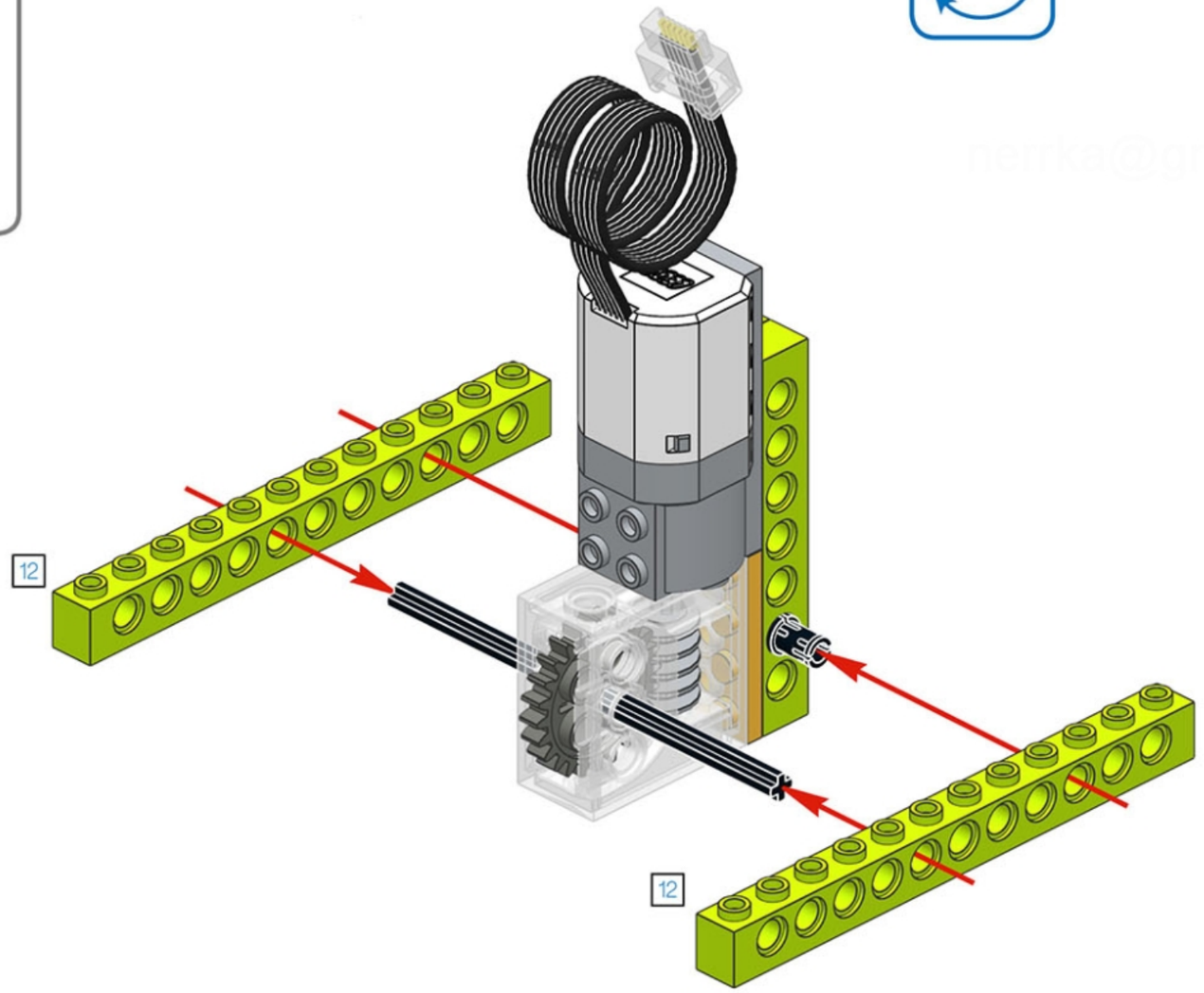

ROBORISE-IT!
ROBOTIC EDUCATION

ROBORISE-IT!
ROBOTIC EDUCATION

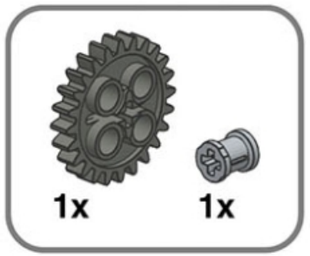

7

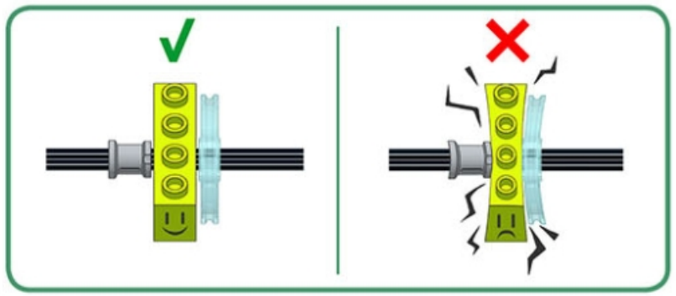

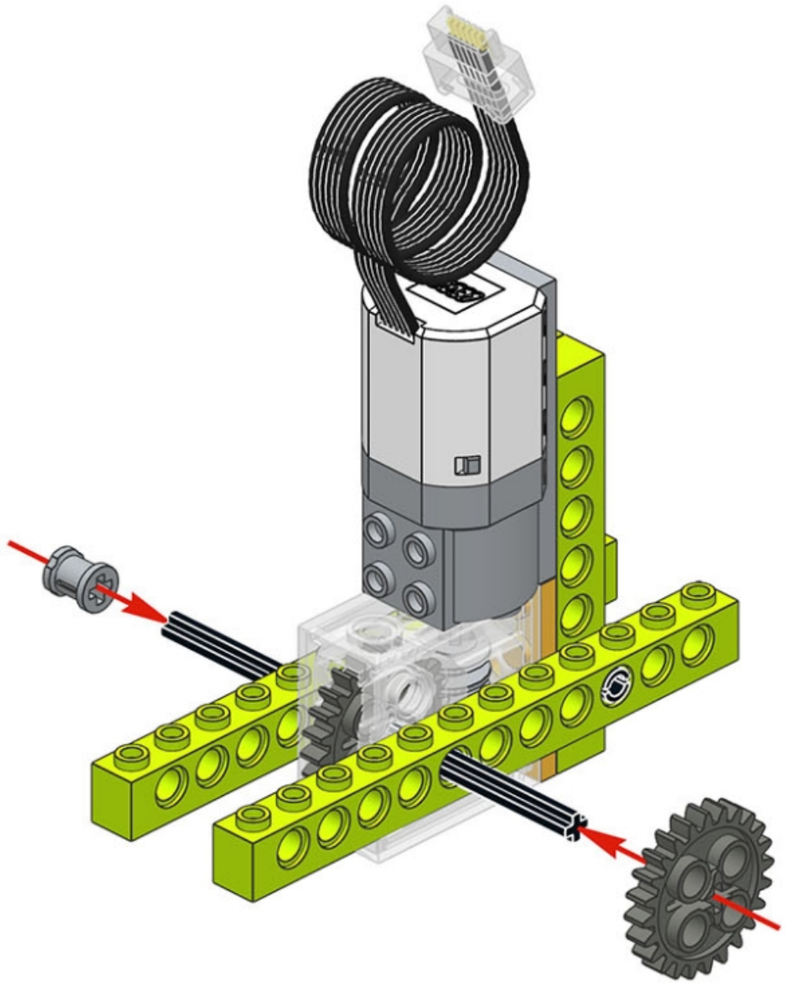

nerka@gmail.com

nerrke@gmail.com

ROBORISE-IT!
ROBOTIC EDUCATION

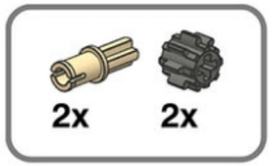

8

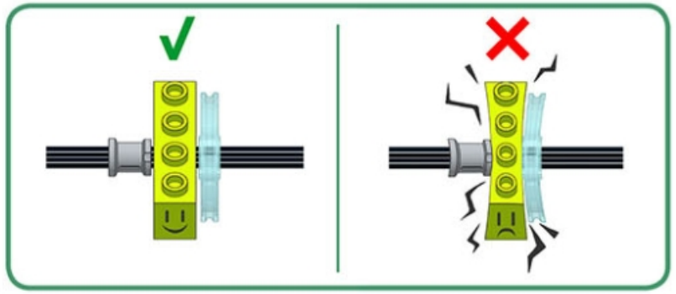

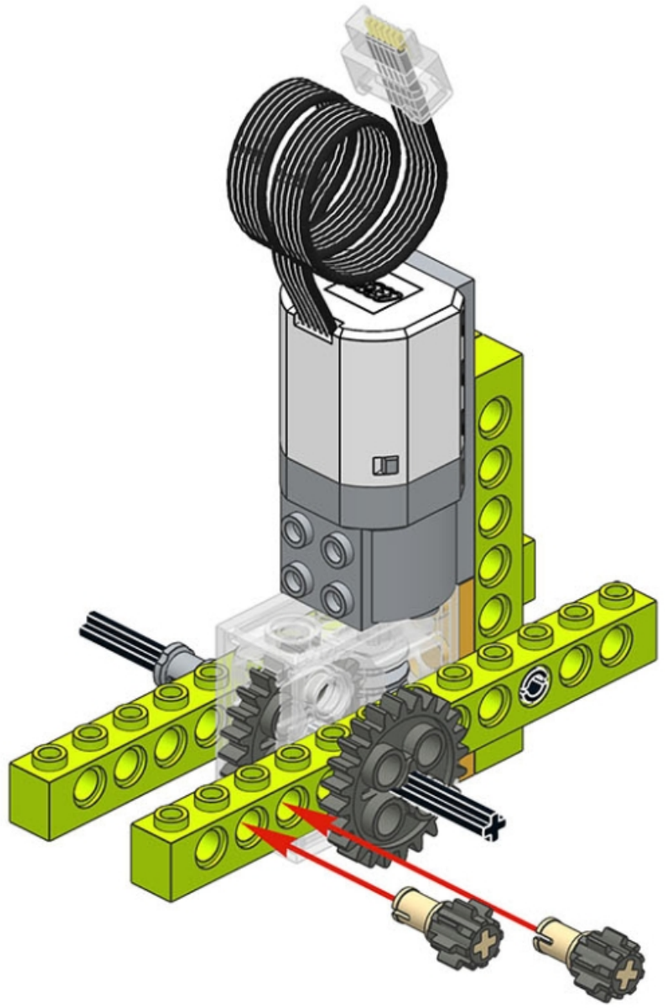

ROBORISE-IT!
ROBOTIC EDUCATION

9

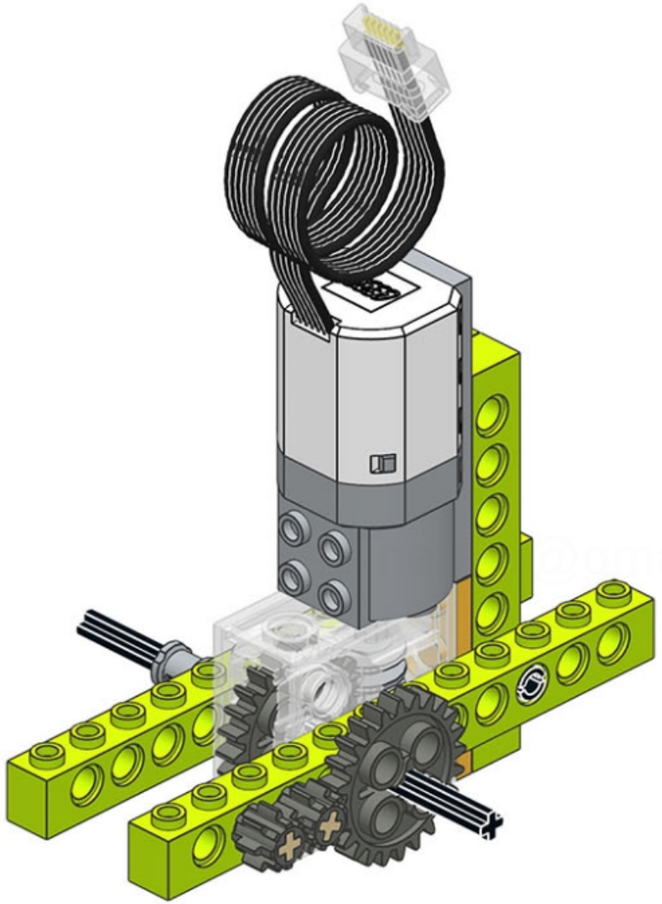

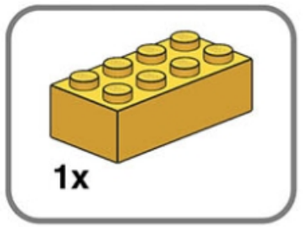

10

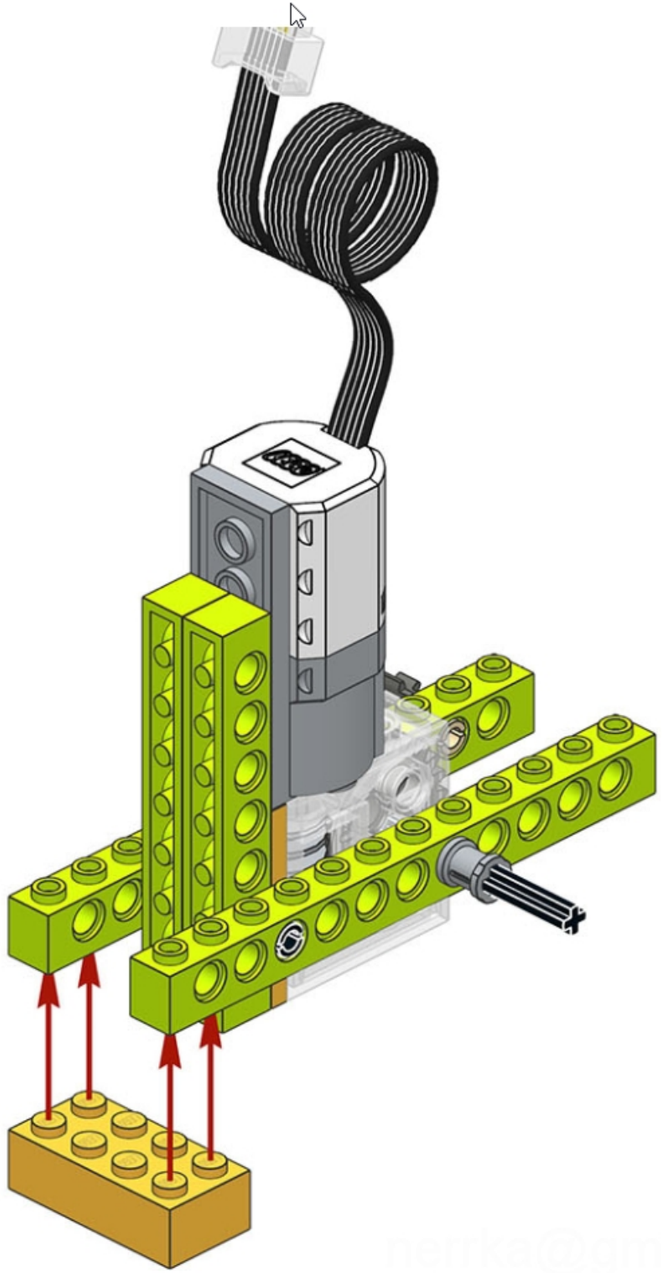

ROBORISE-IT!
ROBOTIC EDUCATION

10/52

0

30

ROBORISE-IT!
ROBOTIC EDUCATION

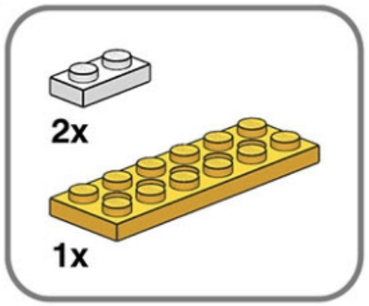

1

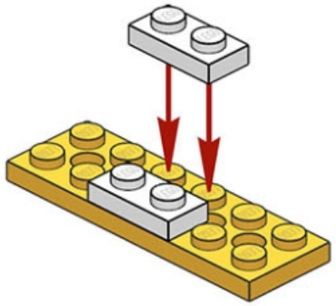

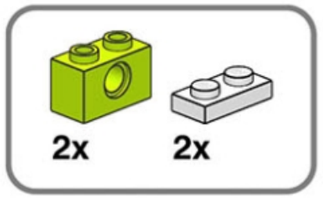

2

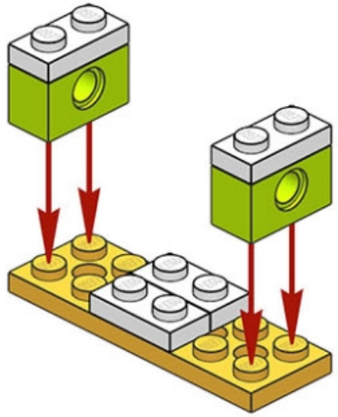

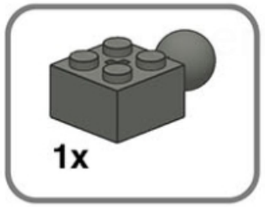

3

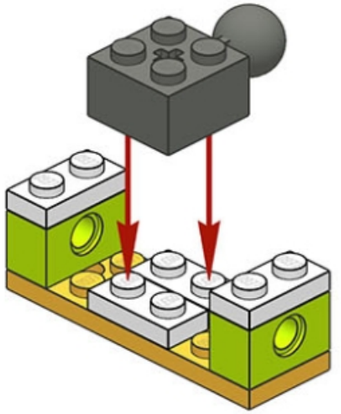

11/52

0

31

ROBORISE-IT!
ROBOTIC EDUCATION

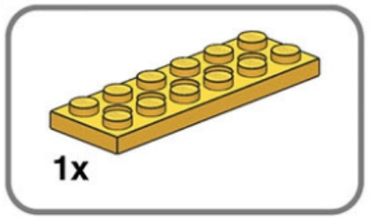

4

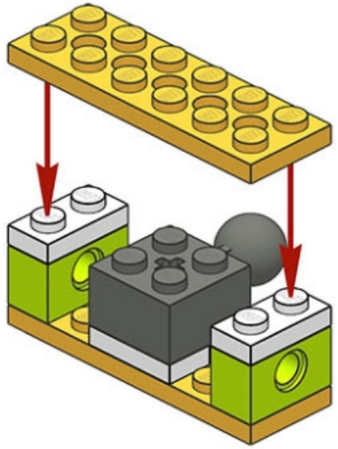

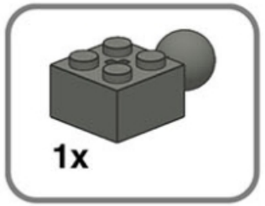

5

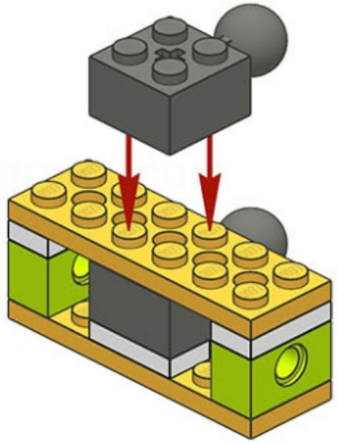

6

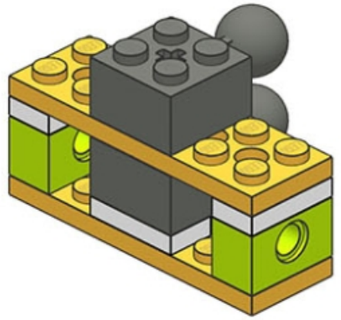

12/52

0

32

ROBORISE-IT!
ROBOTIC EDUCATION

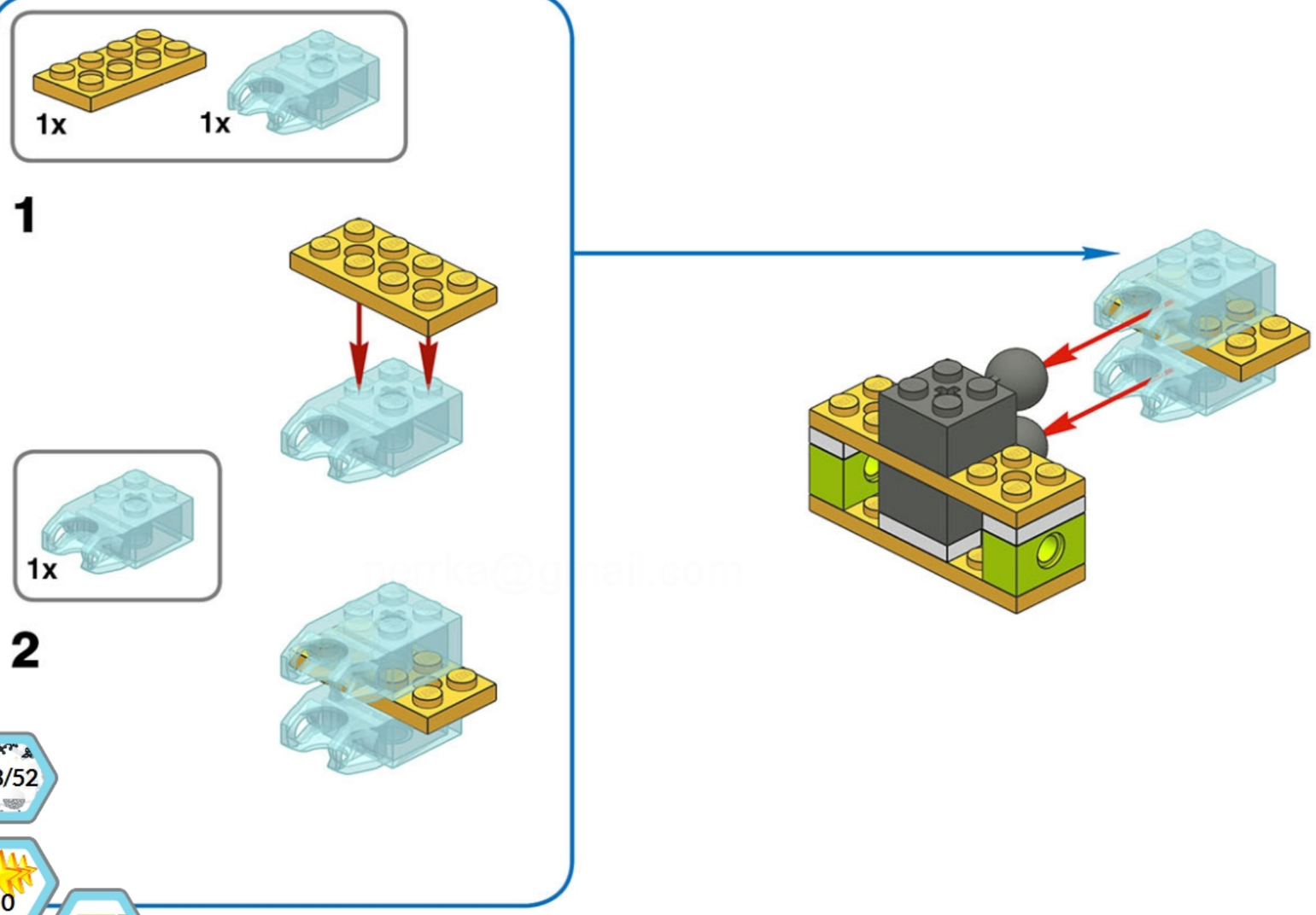

barka@gmail.com

13/52

0

33

ROBORISE-IT!
ROBOTIC EDUCATION

14

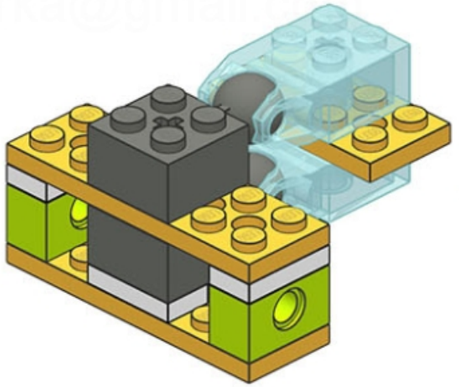

nerrka@gmail.com

14/52

0

34

ROBORISE-IT!
ROBOTIC EDUCATION

15

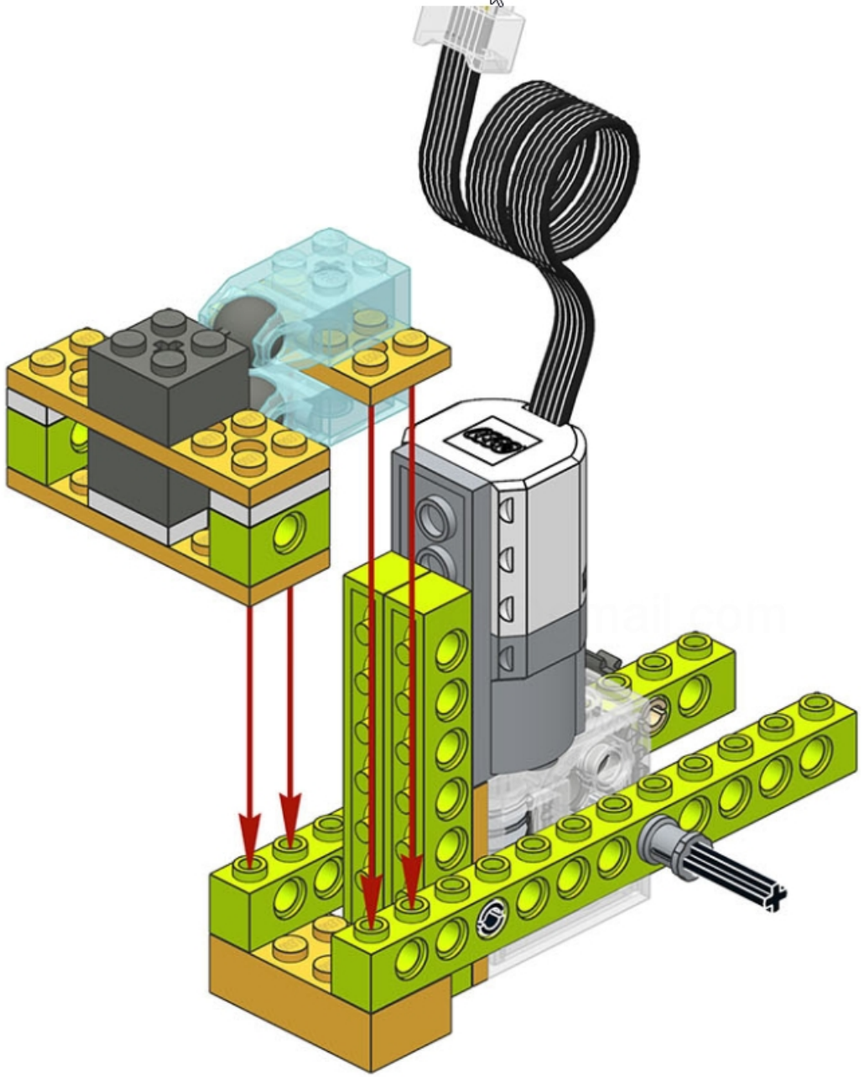

15/52

0

35

16

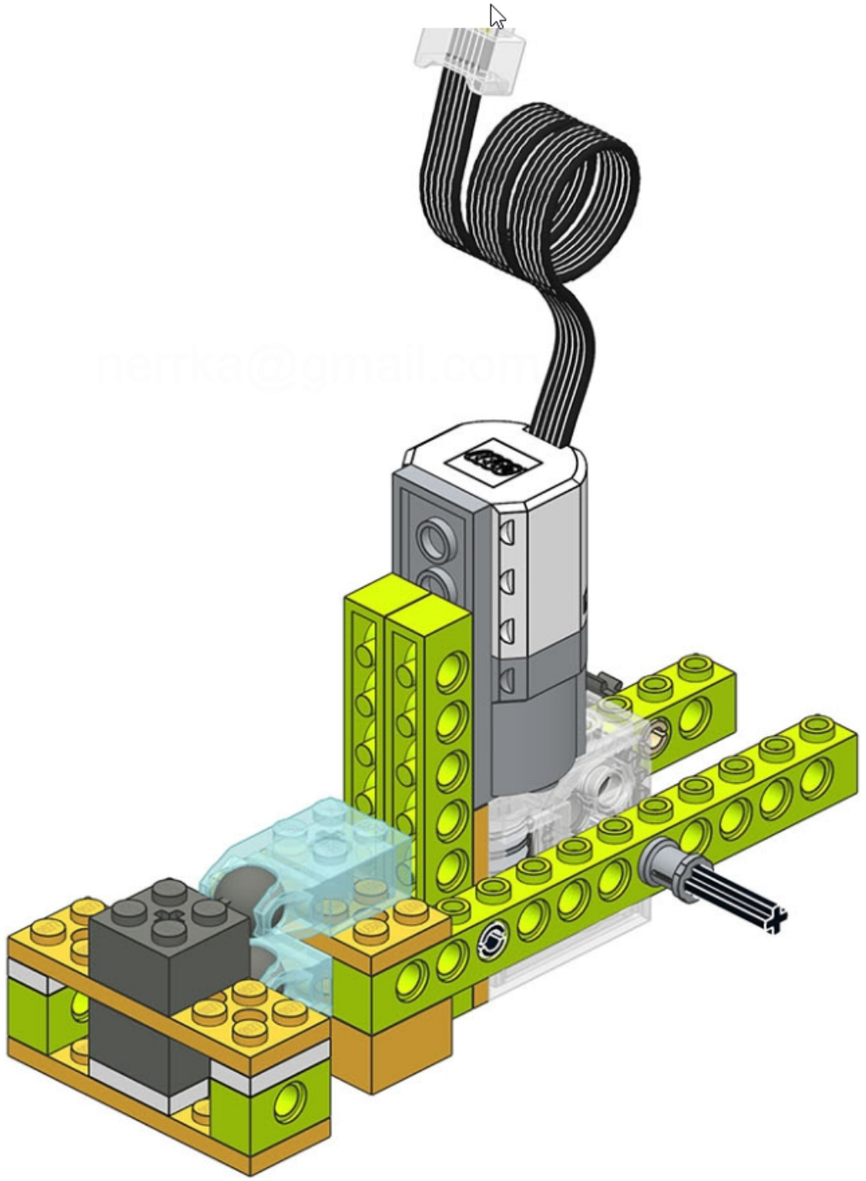

ROBORISE-IT!
ROBOTIC EDUCATION

ROBORISE-IT!
ROBOTIC EDUCATION

2x 1x

1

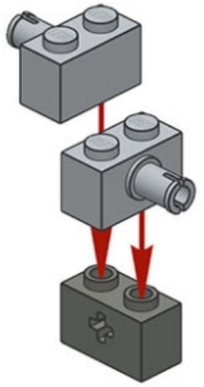

2x

2

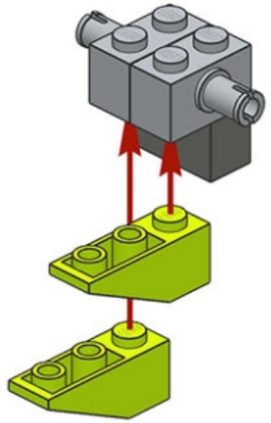

2x

3

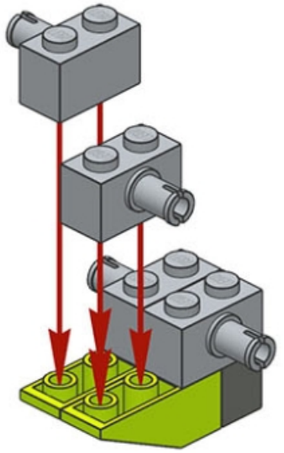

4

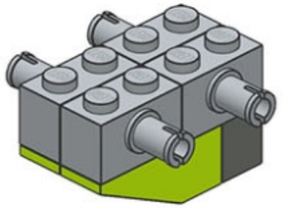

17/52

0

37

18

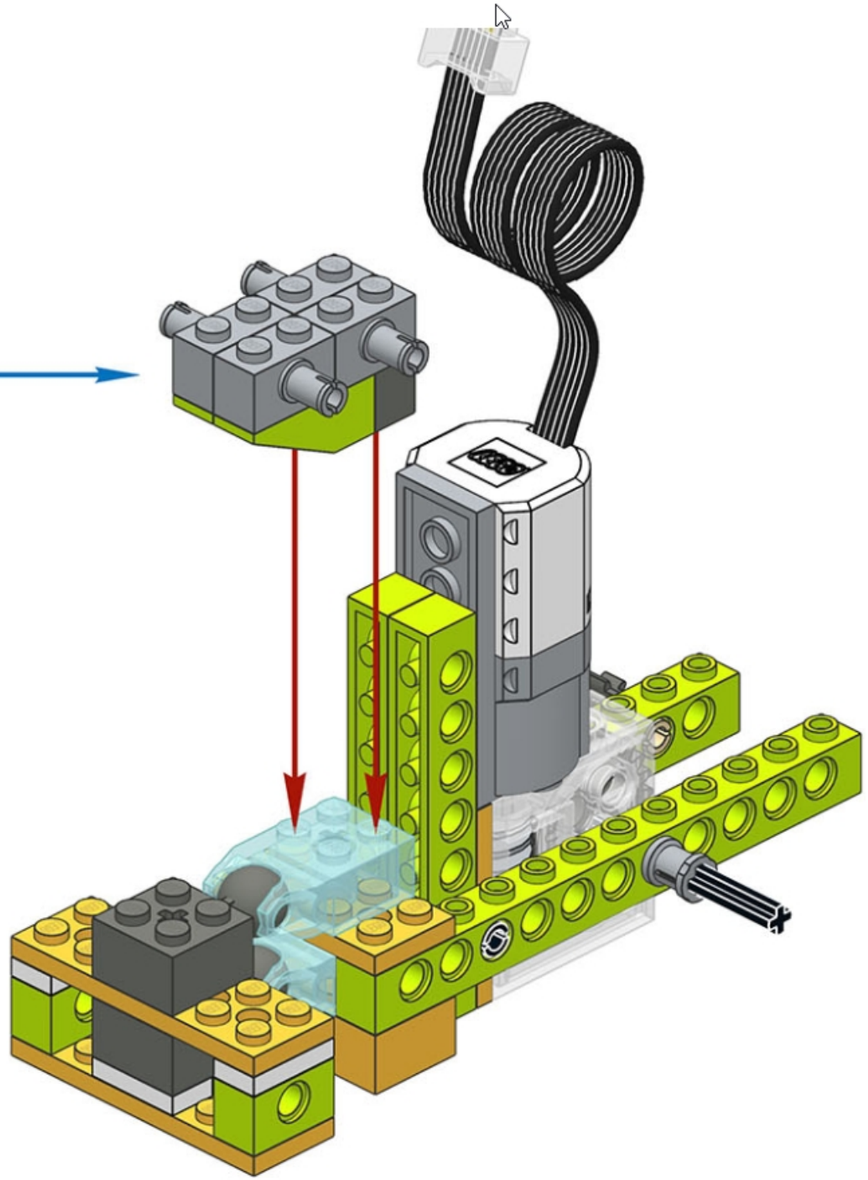

nerrka@gmail.com

ROBORISE-IT!
ROBOTIC EDUCATION

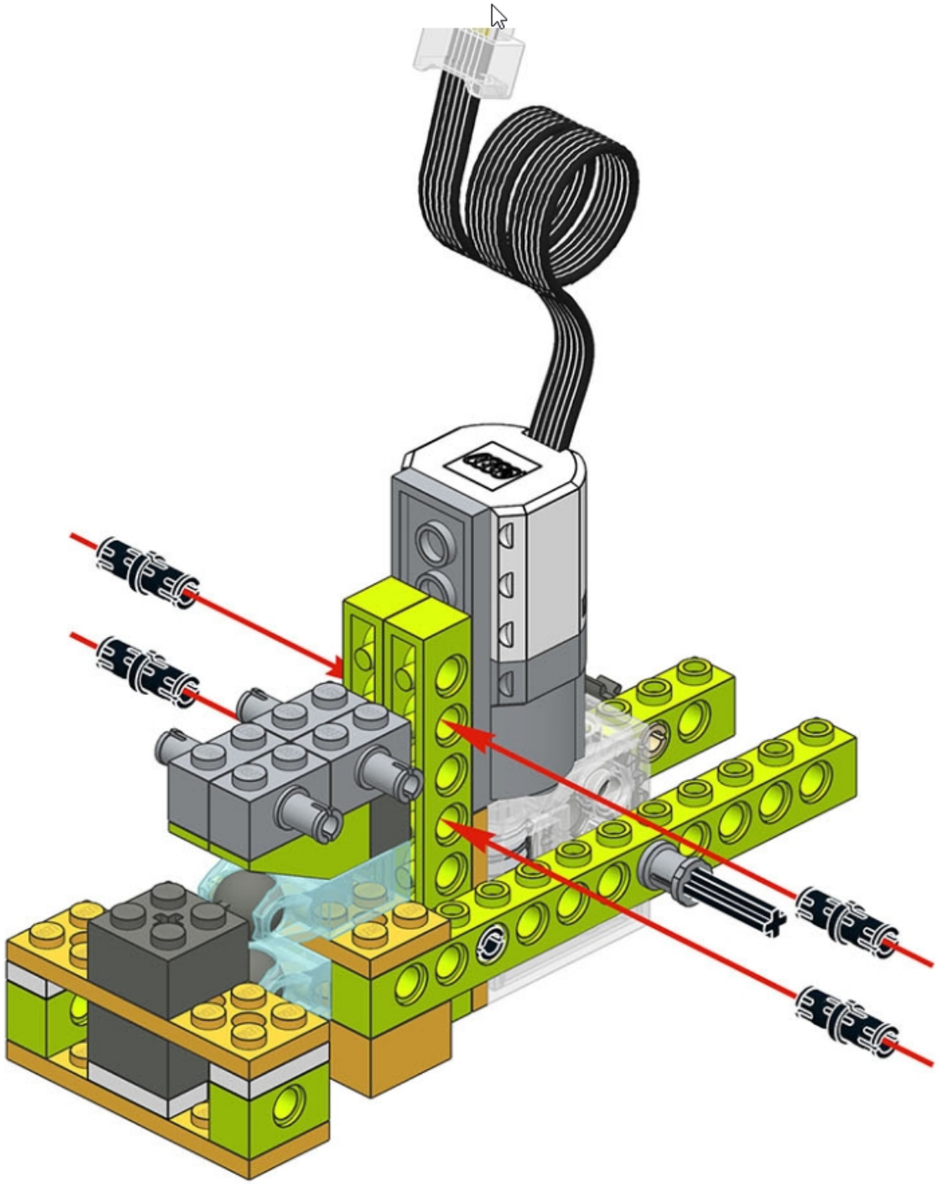

4x

19

ROBORISE-IT!
ROBOTIC EDUCATION

19/52

0

39

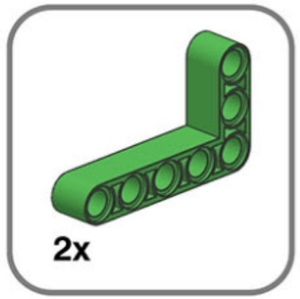

20

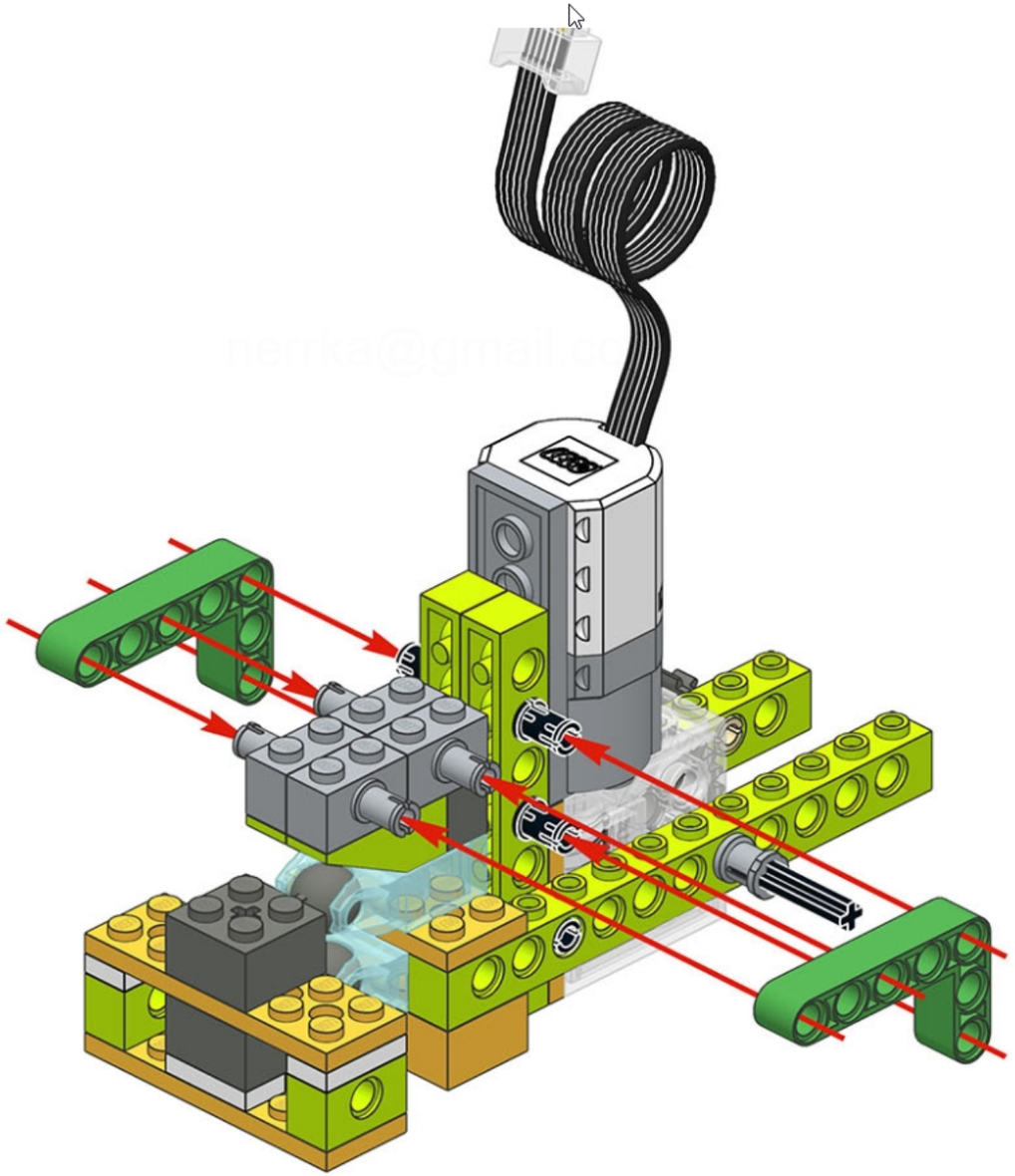

ROBORISE-IT!
ROBOTIC EDUCATION

20/52

0

40

21

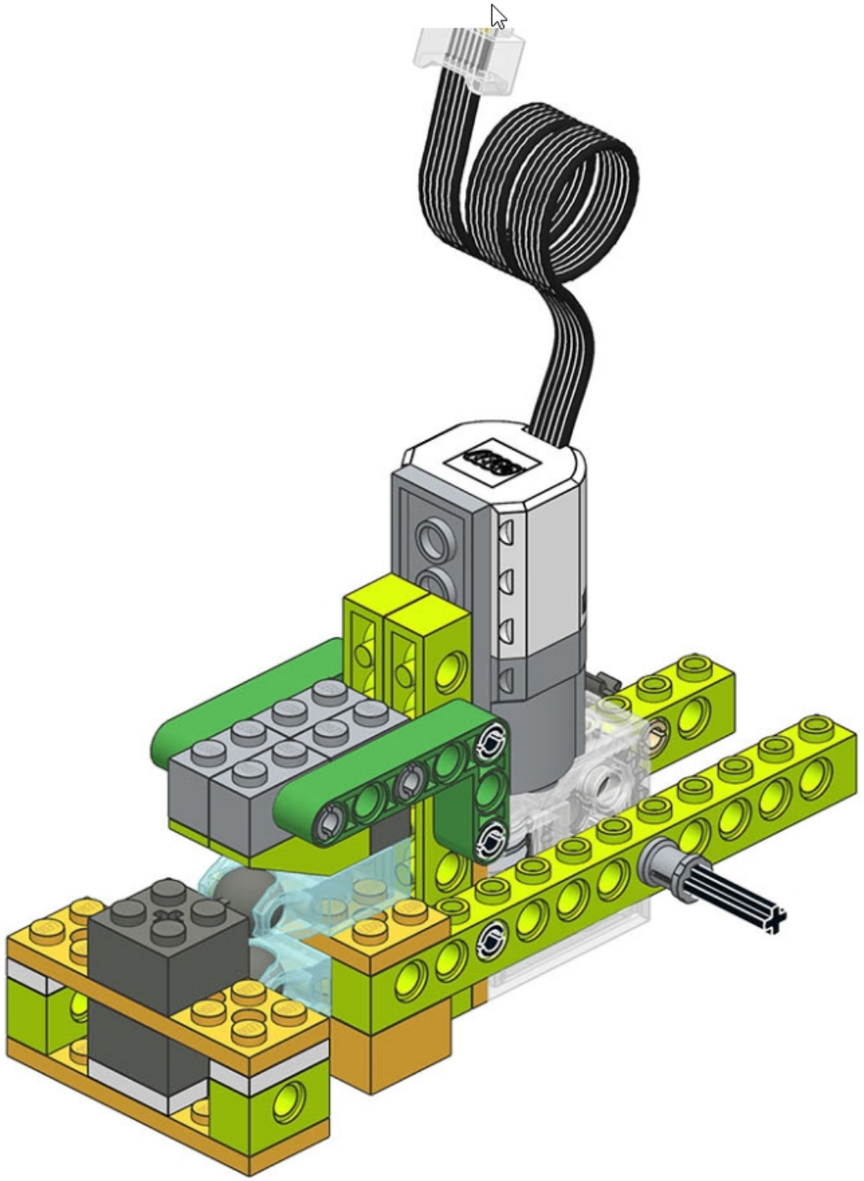

ROBORISE-IT!
ROBOTIC EDUCATION

renka@gmail.com

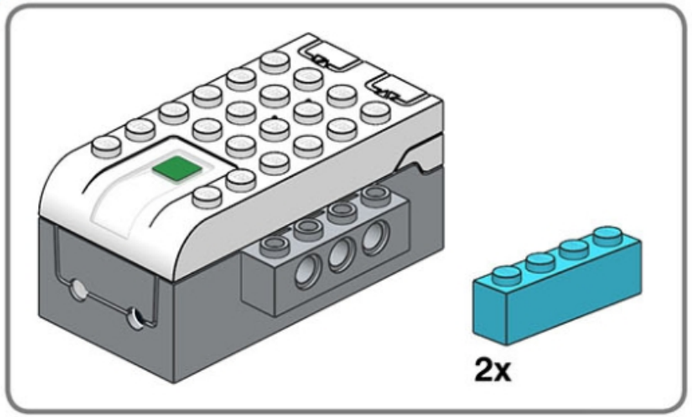

1

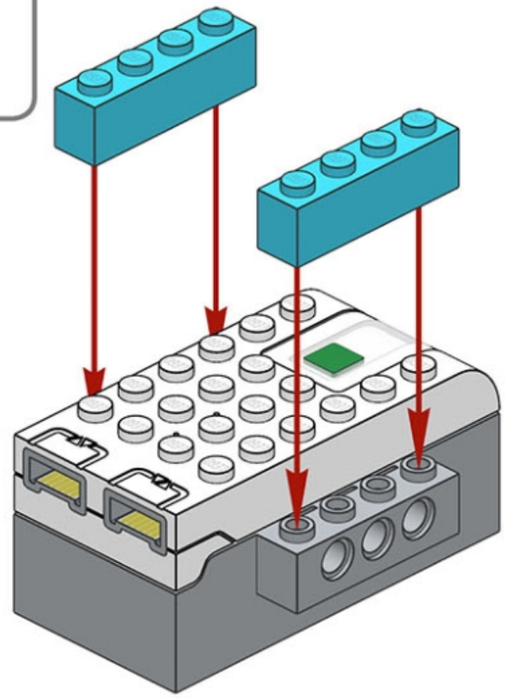

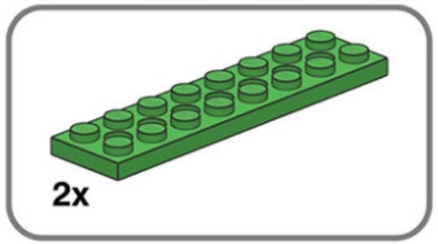

2

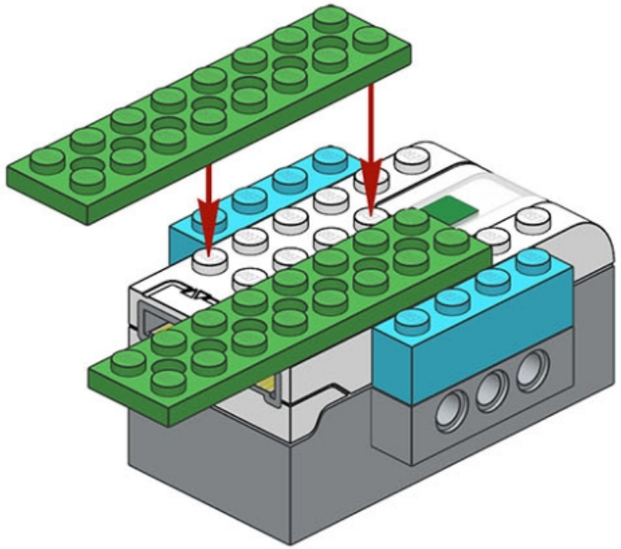

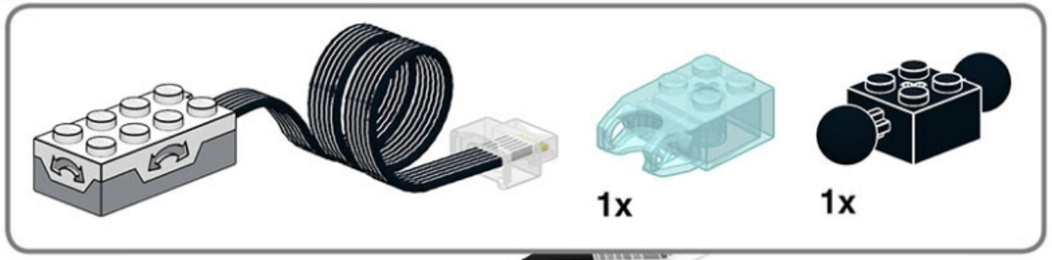

3

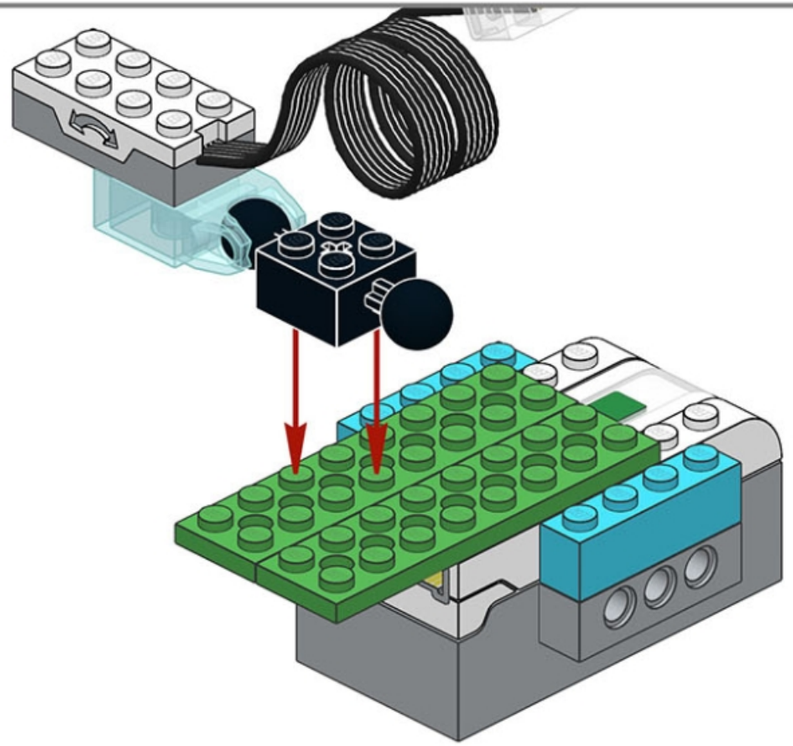

4

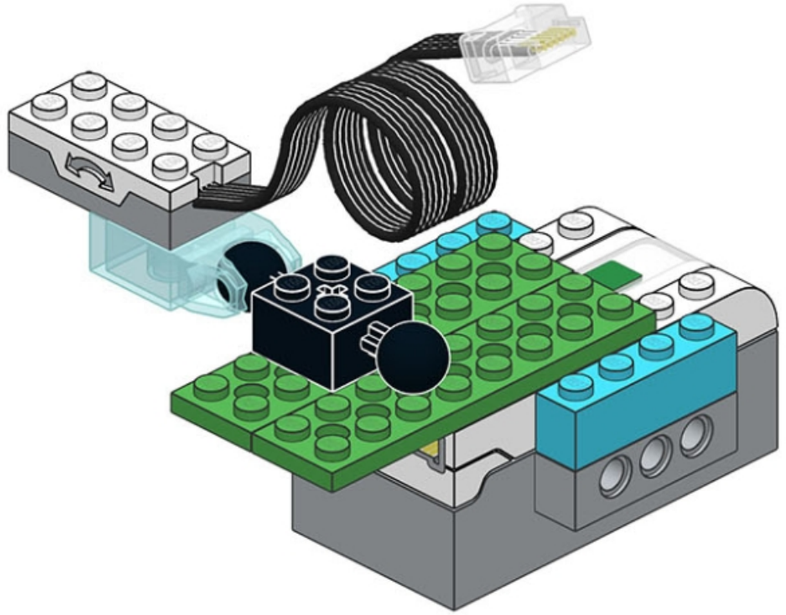

ROBORISE-IT!
ROBOTIC EDUCATION

5

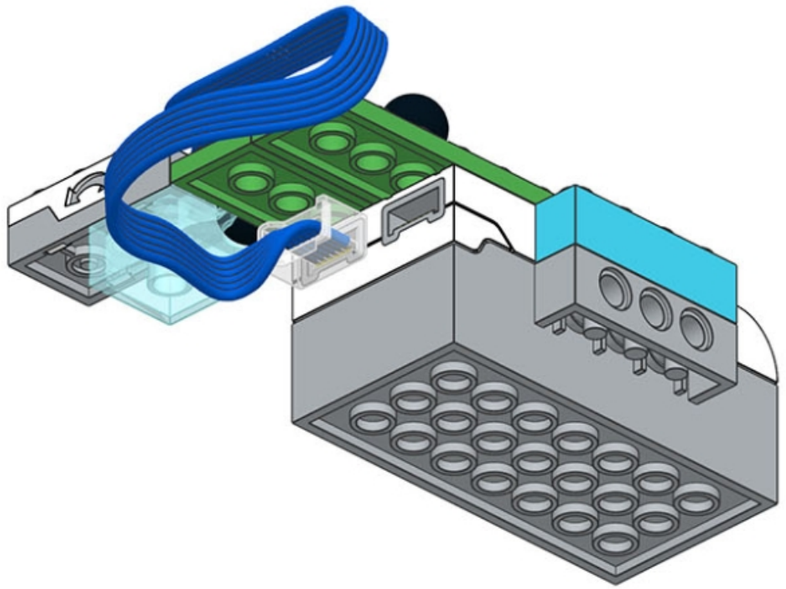

6

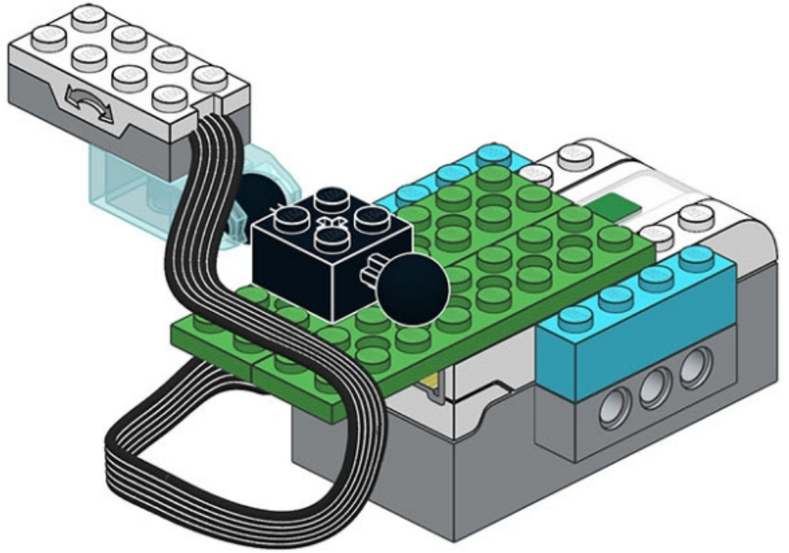

nerrka@gmail.com

ROBORISE-IT!
ROBOTIC EDUCATION

25

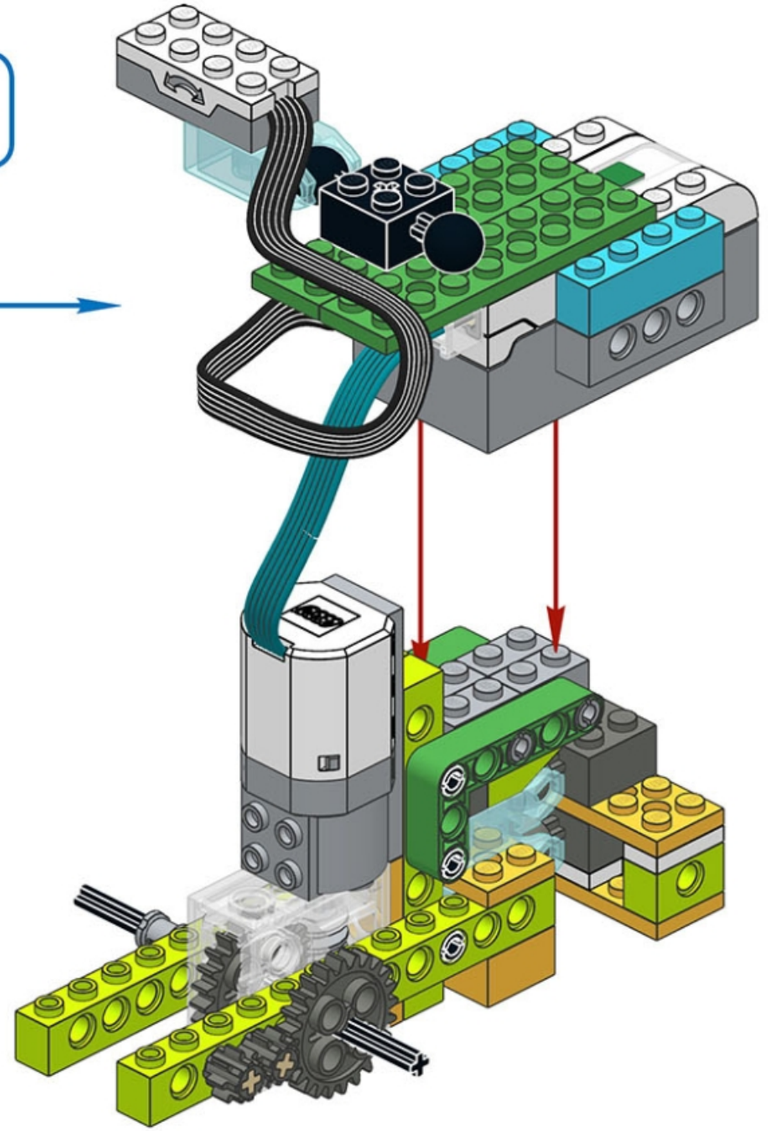

merika@gmail.com

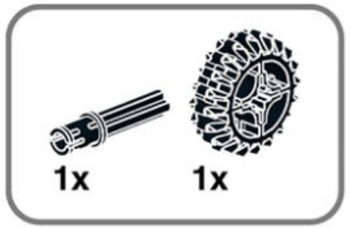

26

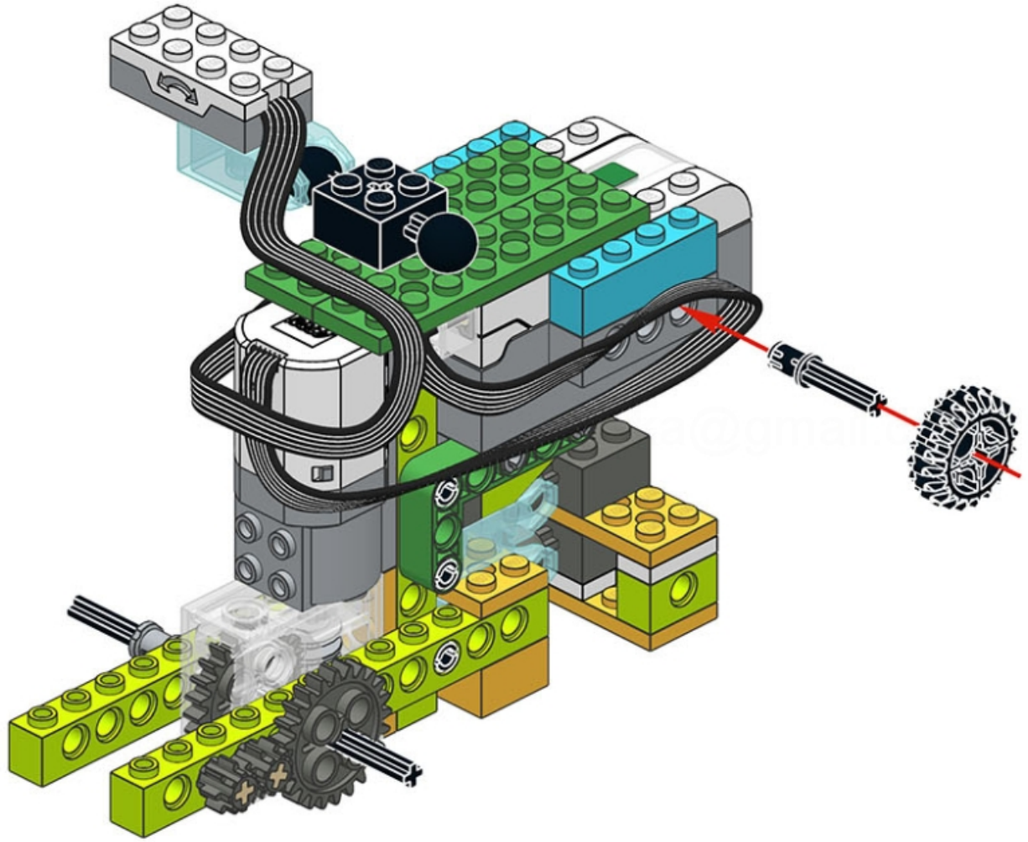

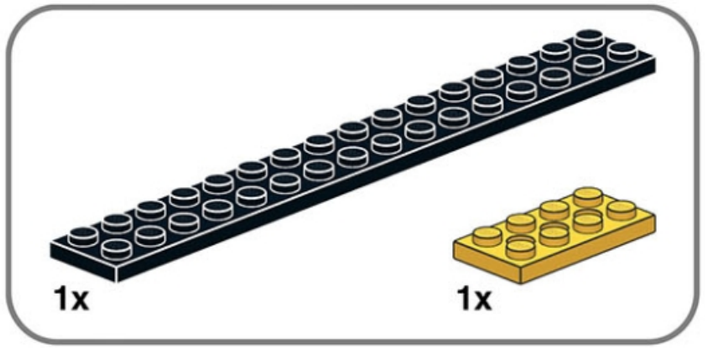

27

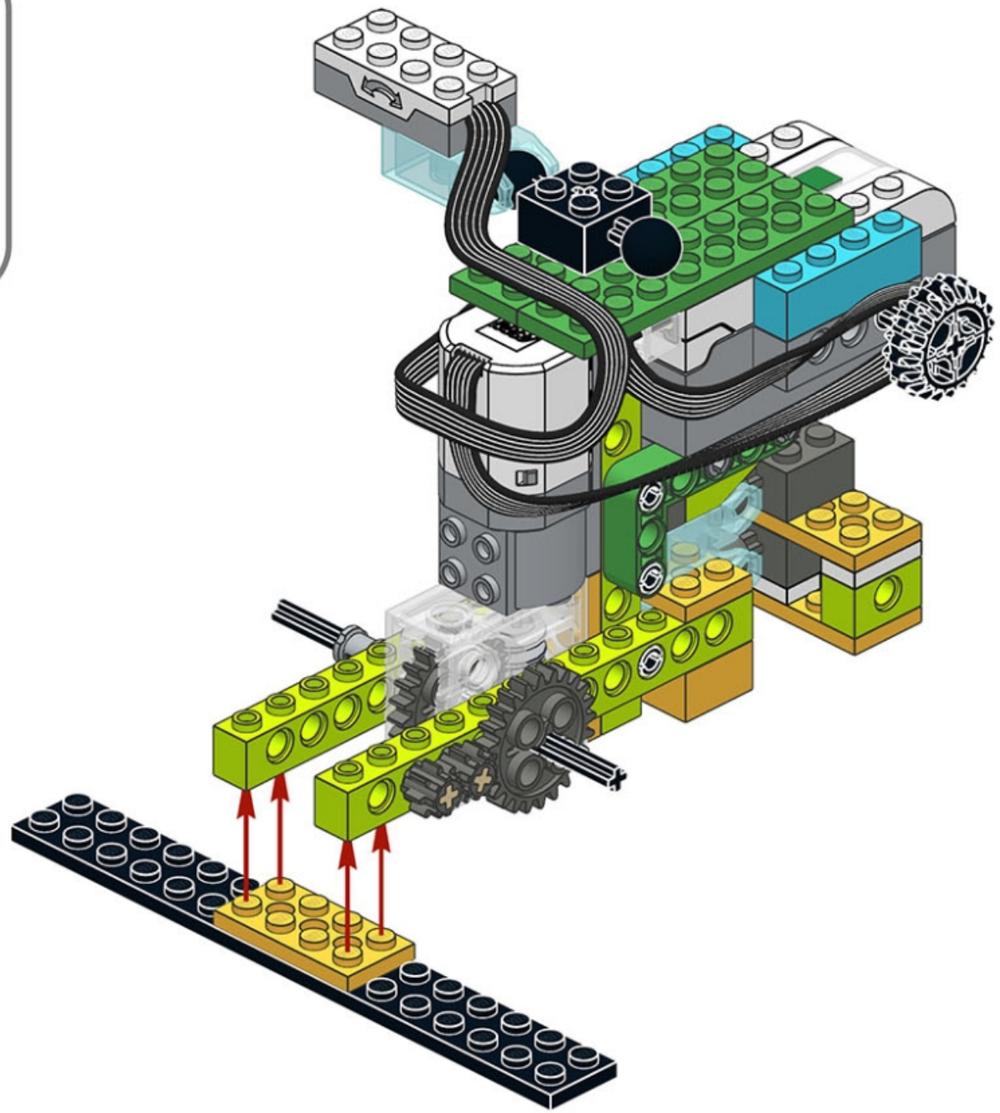

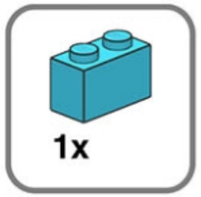

28

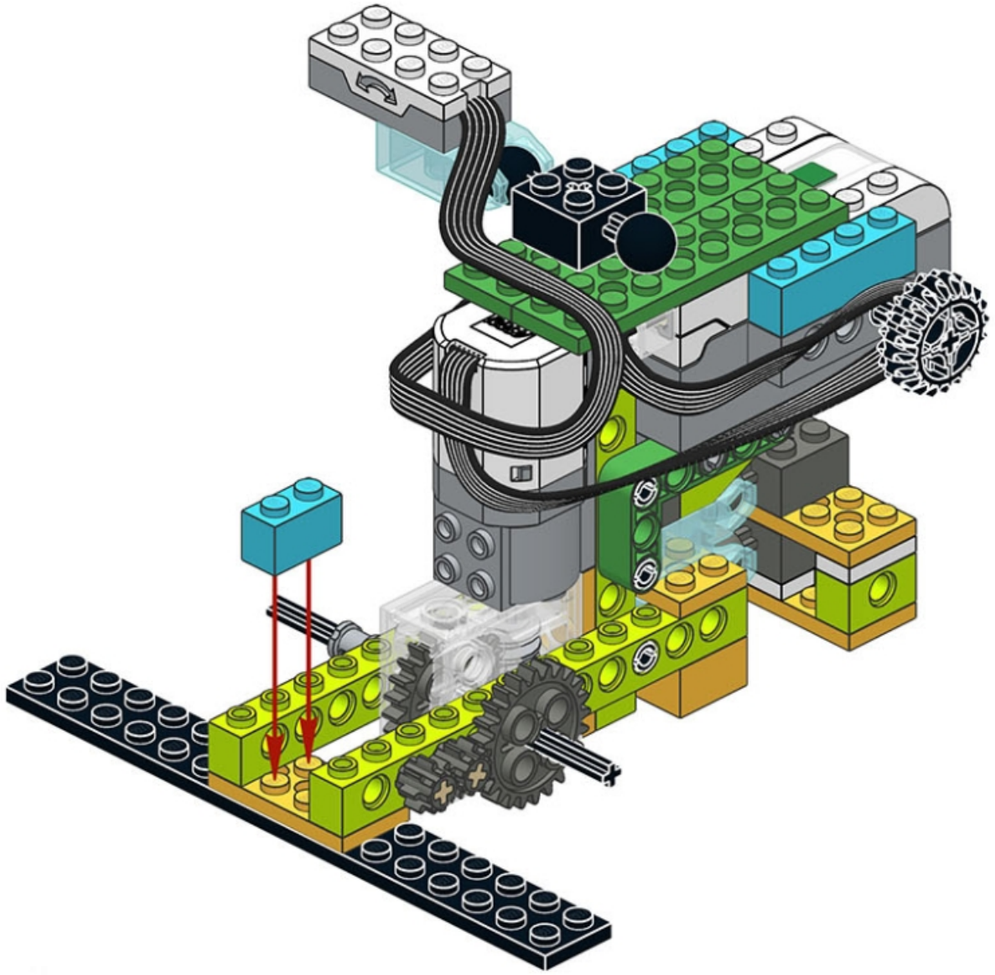

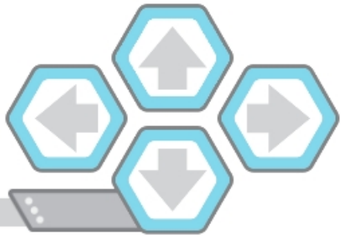

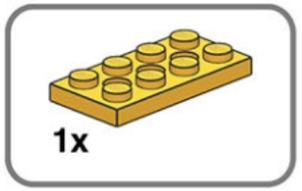

29

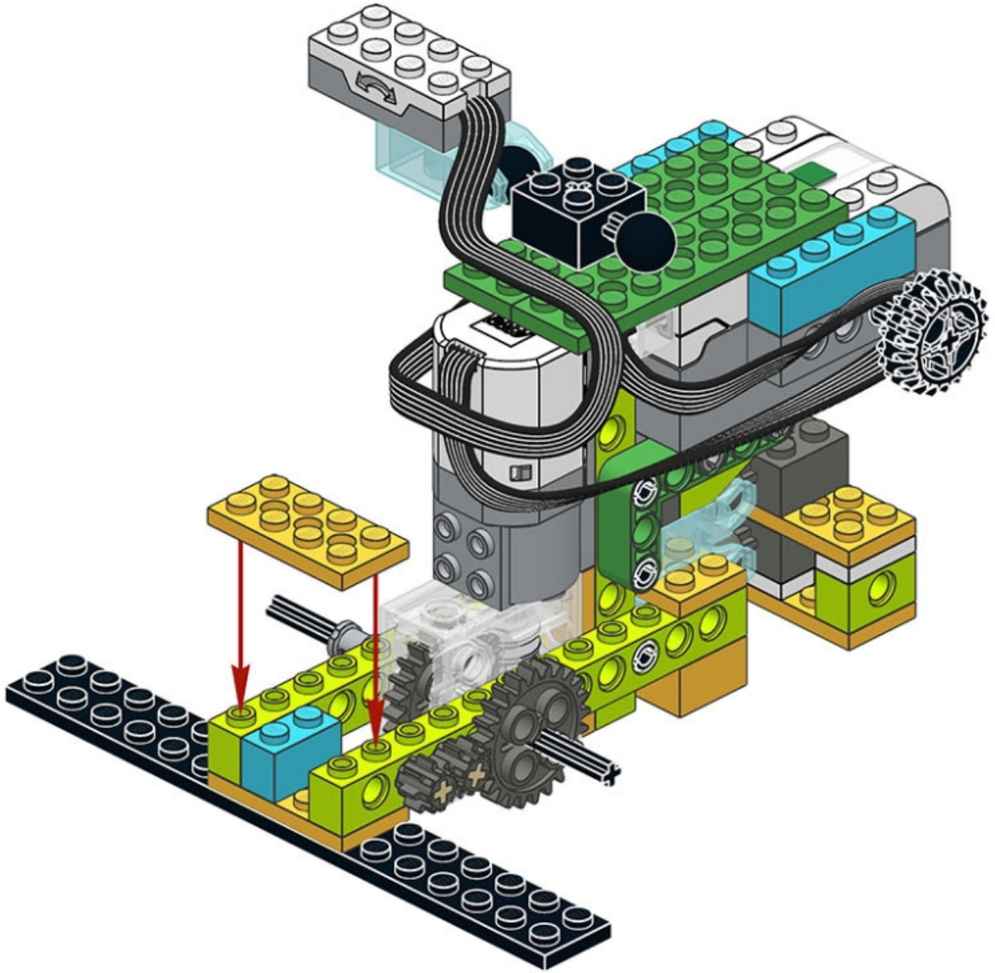

ROBORISE-IT!
ROBOTIC EDUCATION

30

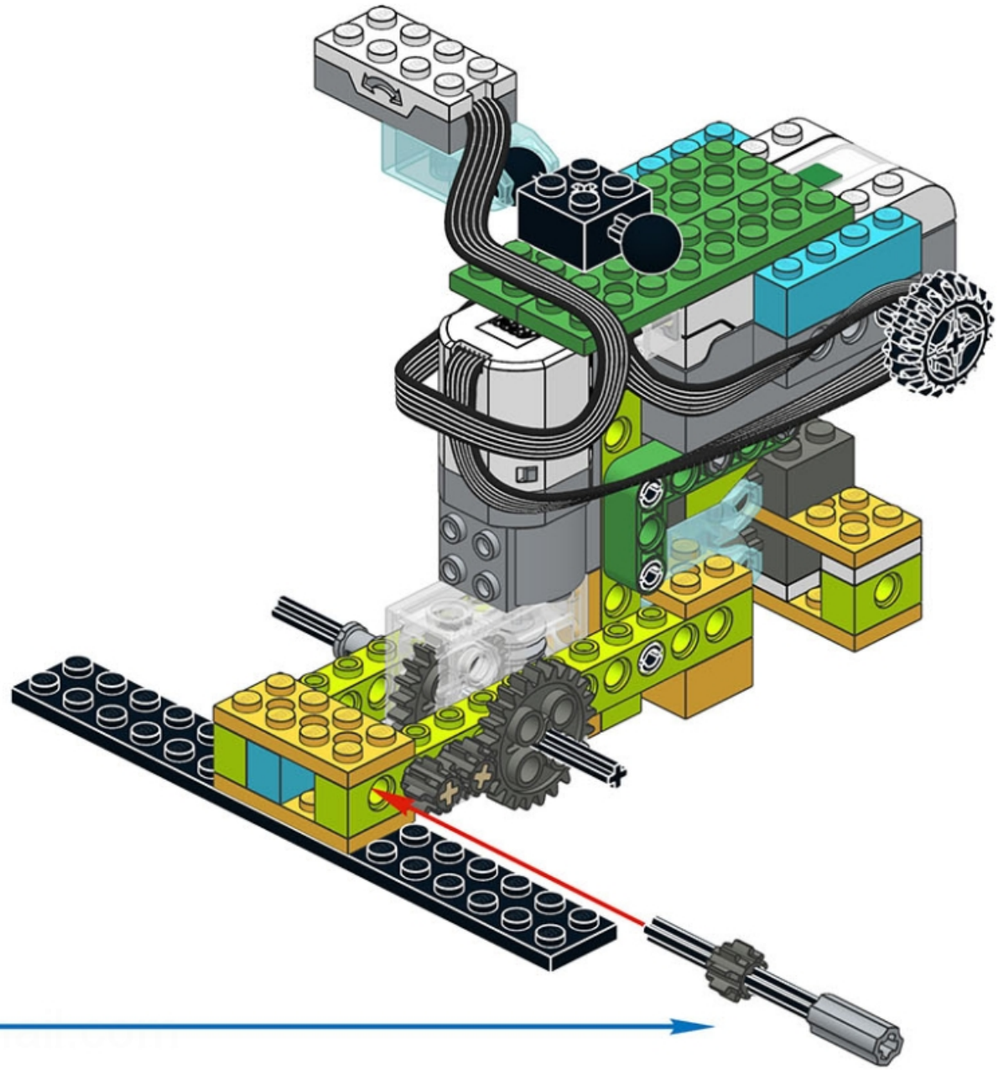

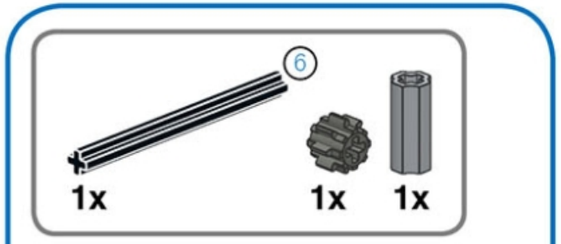

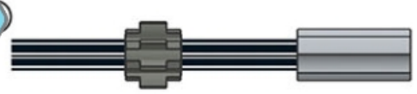

ROBORISE-IT!
ROBOTIC EDUCATION

31

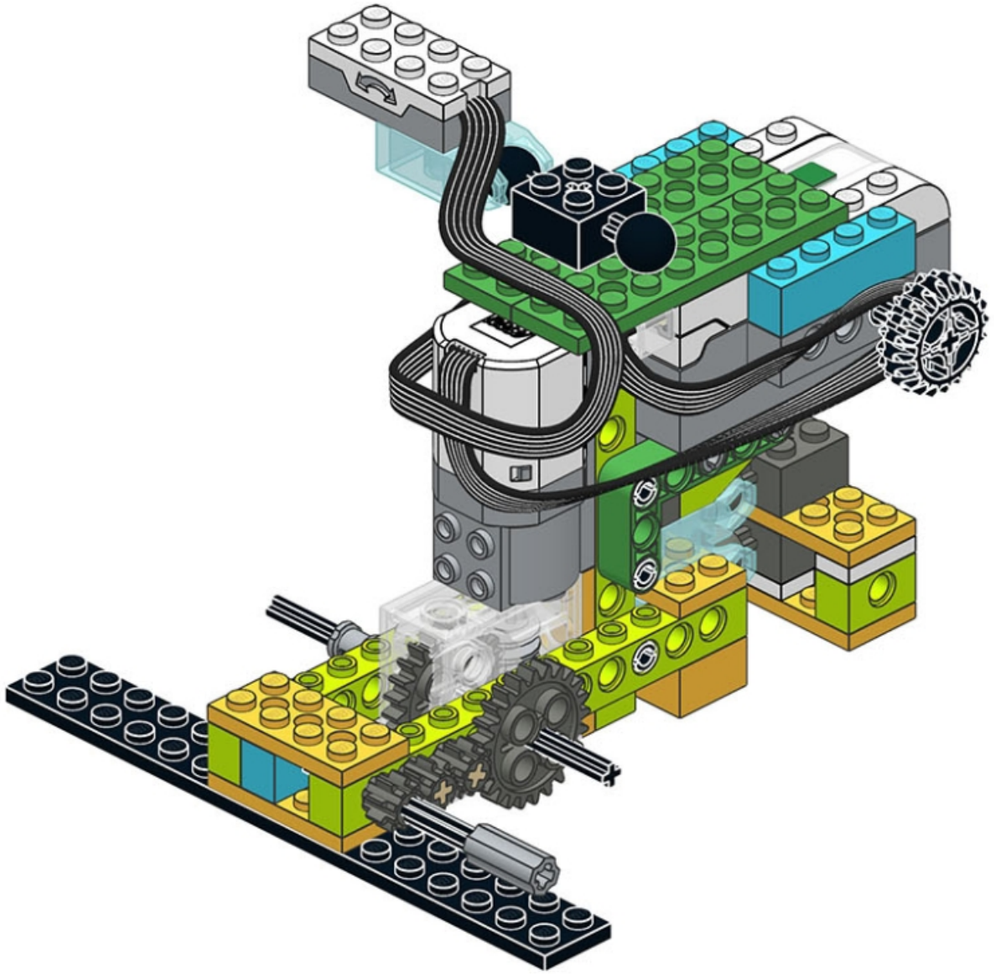

ROBORISE-IT!
ROBOTIC EDUCATION

1x

4
1x

4
1x

1

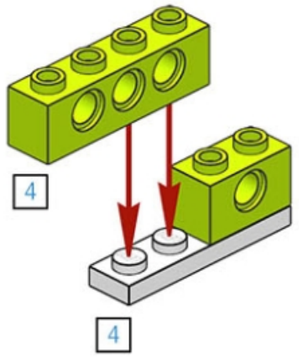

4
1x 1x

2

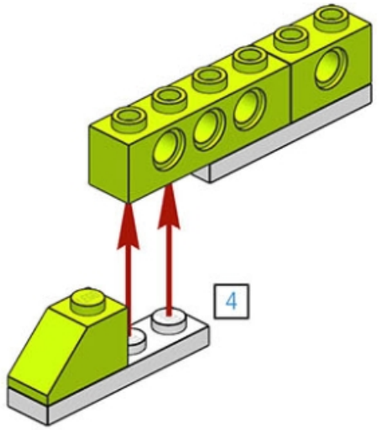

1x

3

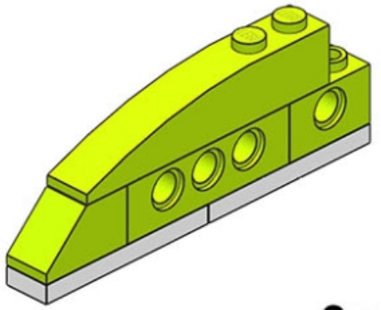

2x

ROBORISE-IT!
ROBOTIC EDUCATION

33

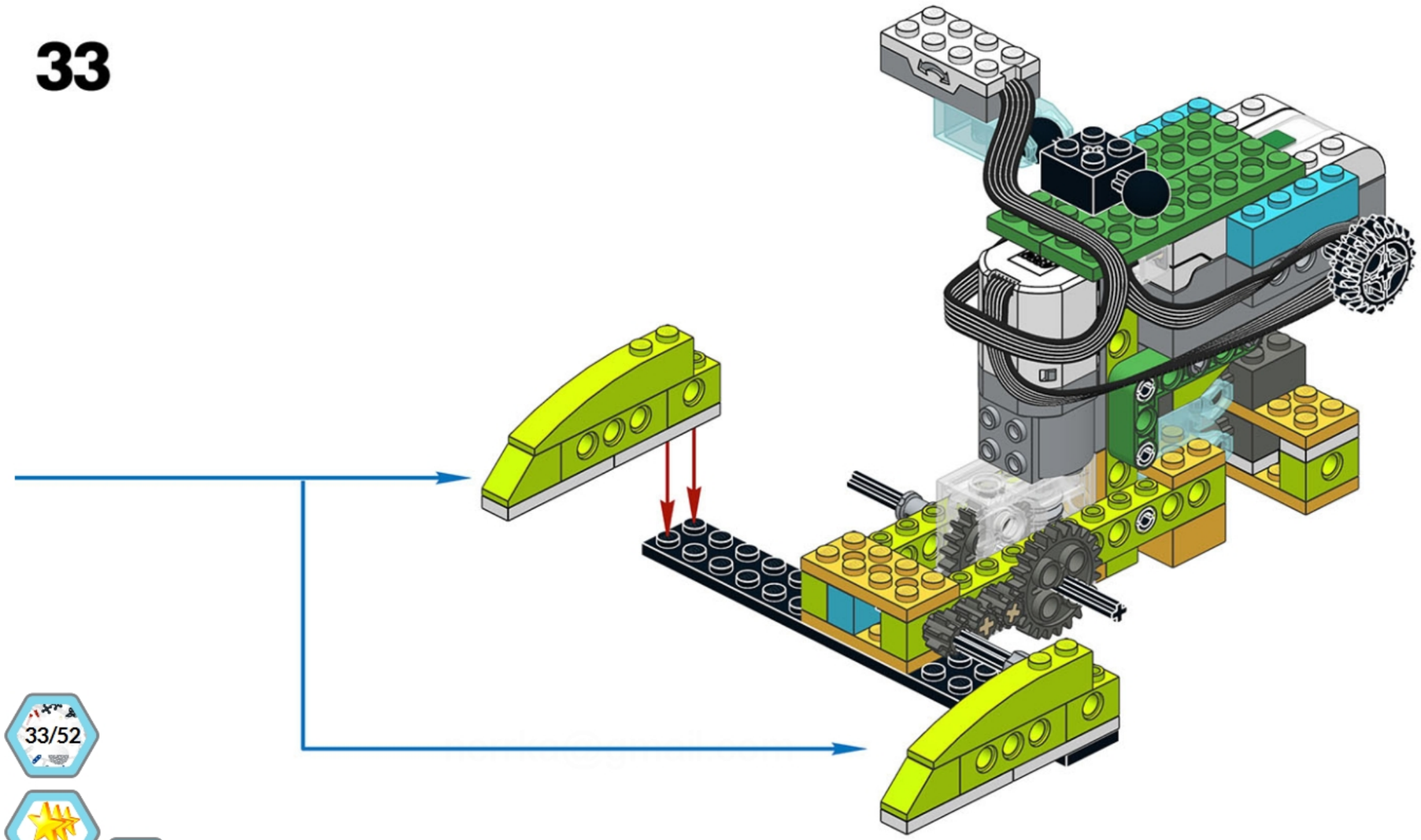

33/52

0

53

ROBORISE-IT!
ROBOTIC EDUCATION

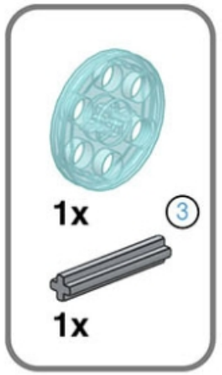

34

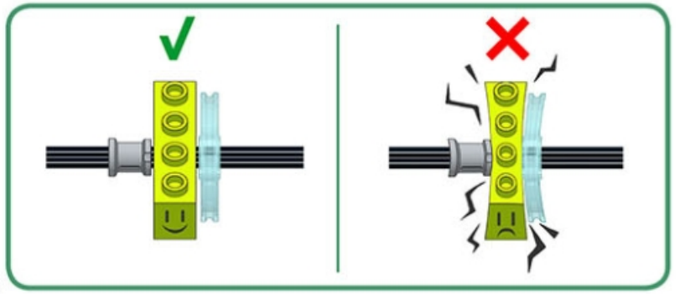

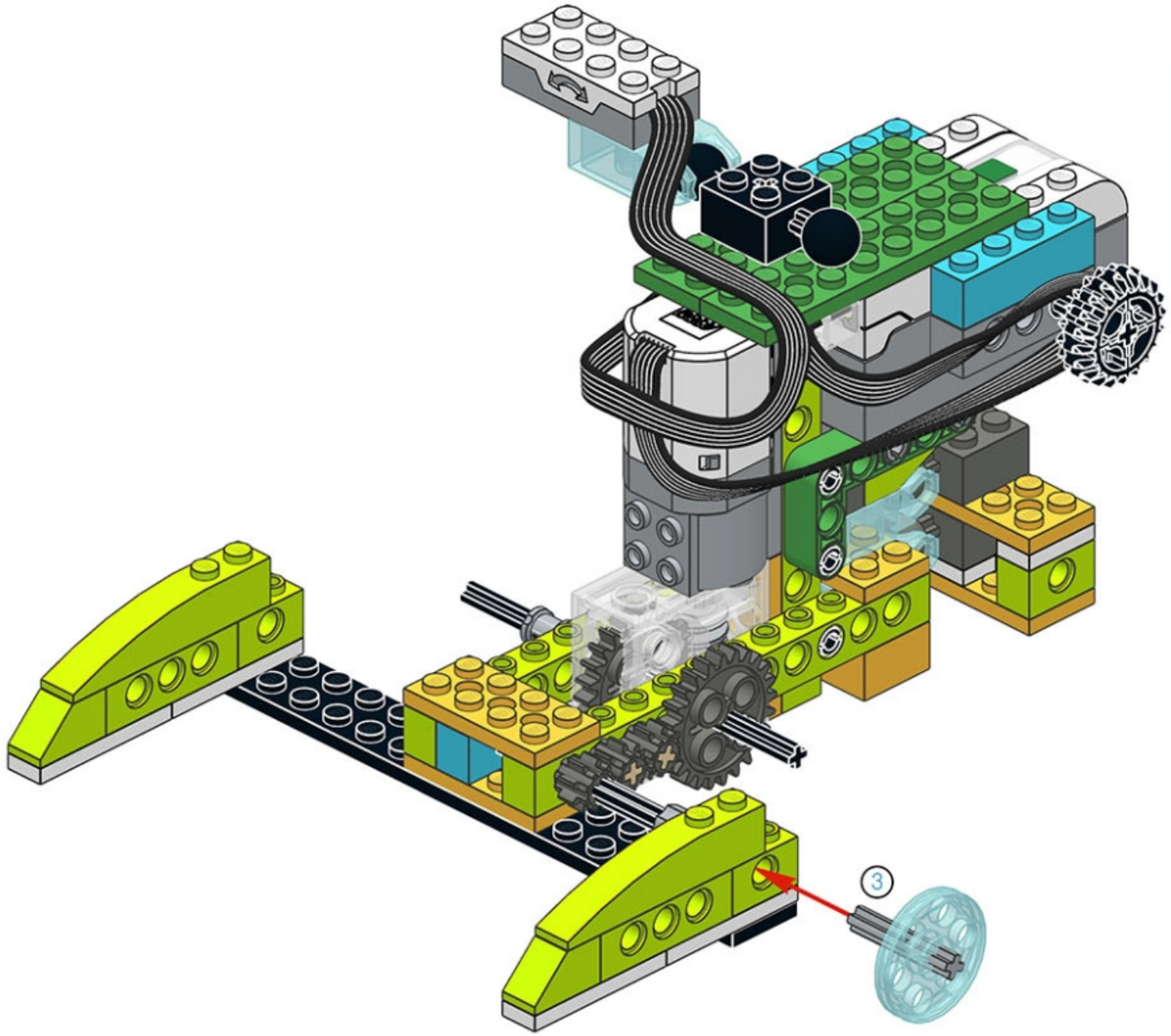

hanka@gmail.com

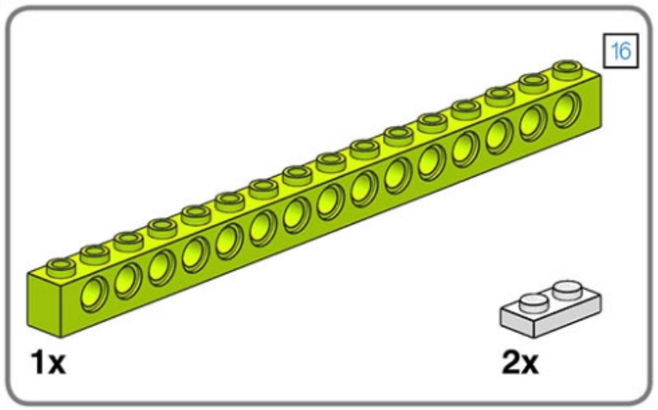

1

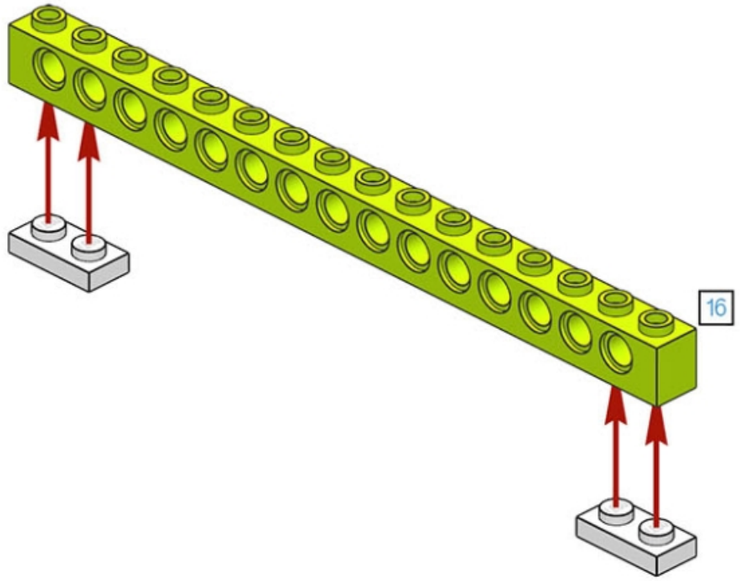

2

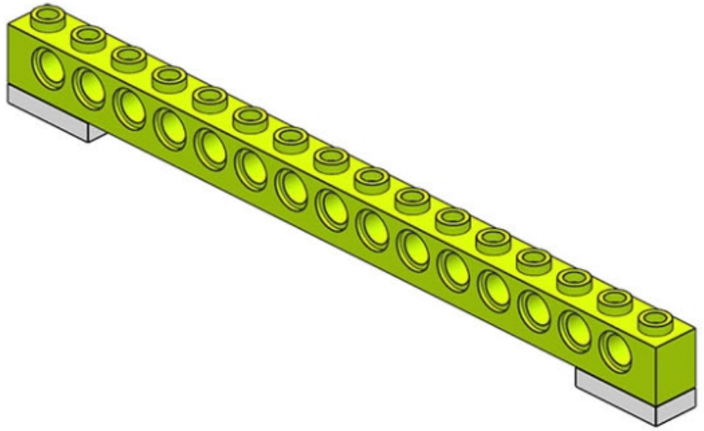

ROBORISE-IT!
ROBOTIC EDUCATION

36

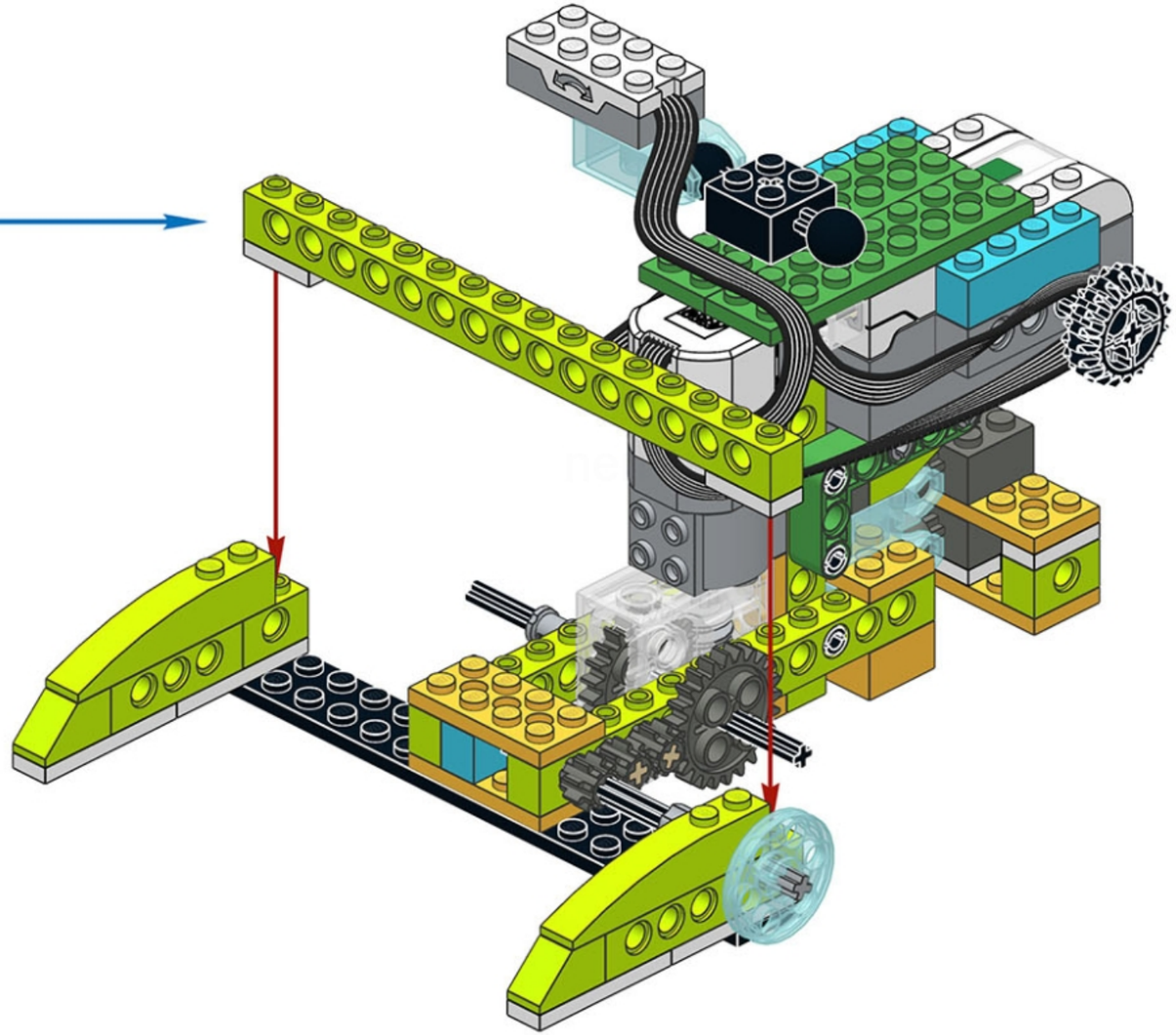

ROBORISE-IT!
ROBOTIC EDUCATION

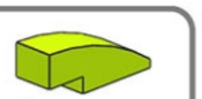

37

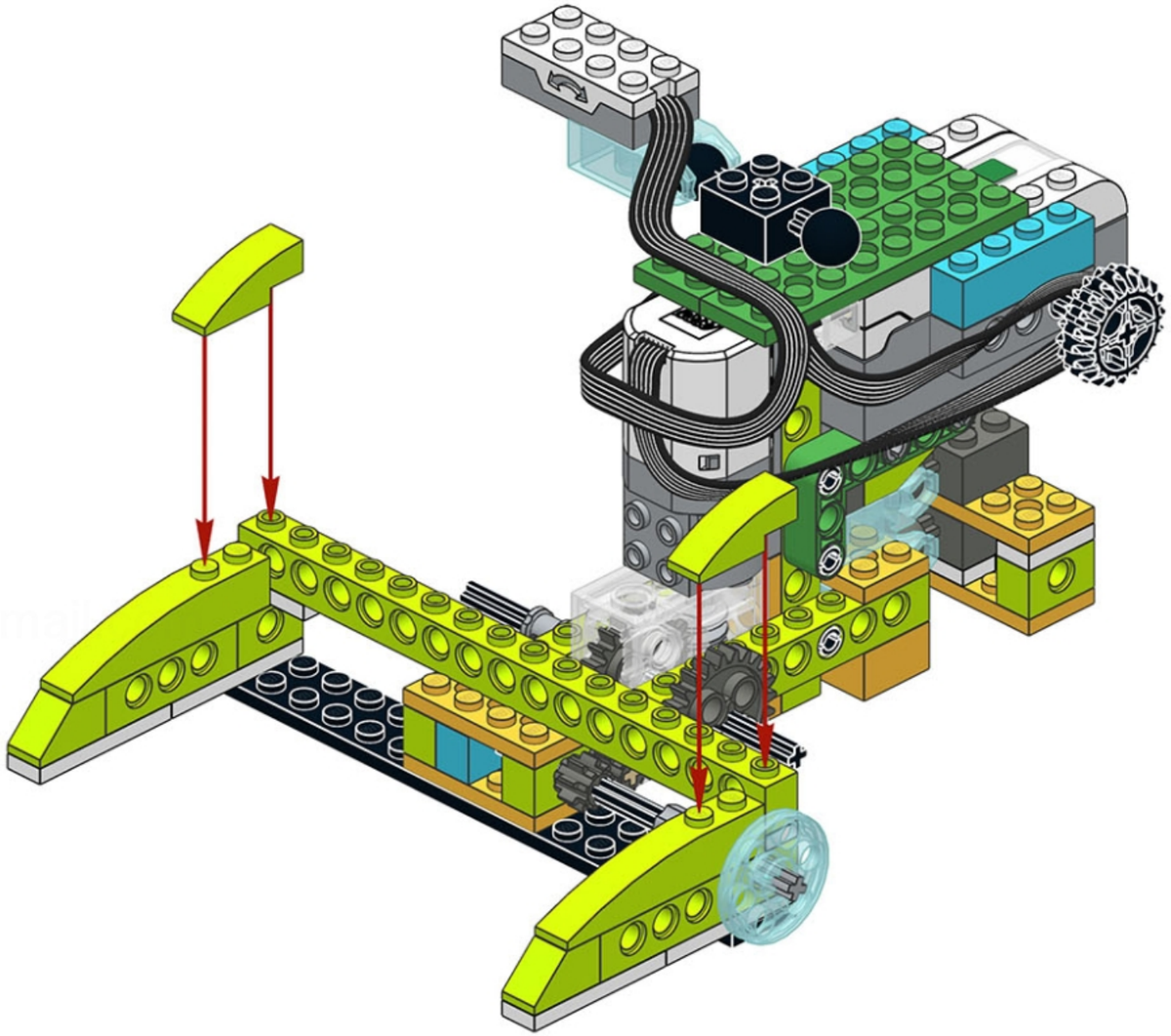

nanka@gmail

ROBORISE-IT!
ROBOTIC EDUCATION

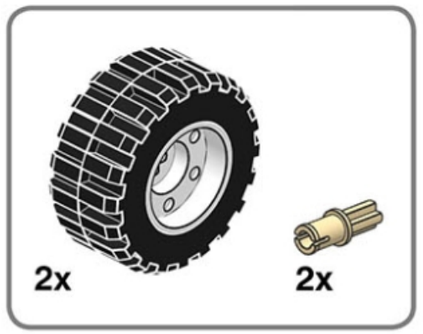

38

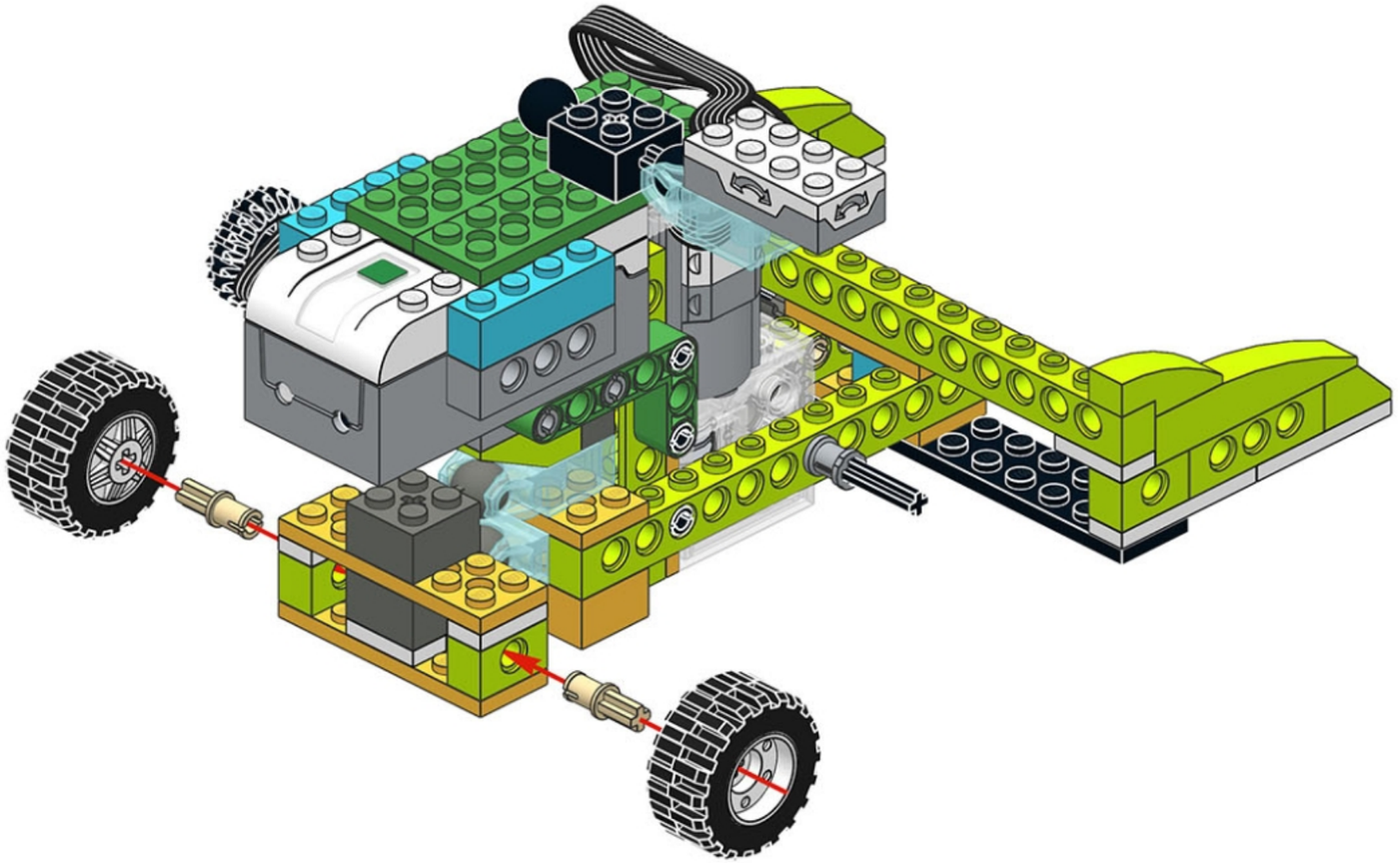

nenka@gmail

ROBORISE-IT!
ROBOTIC EDUCATION

39

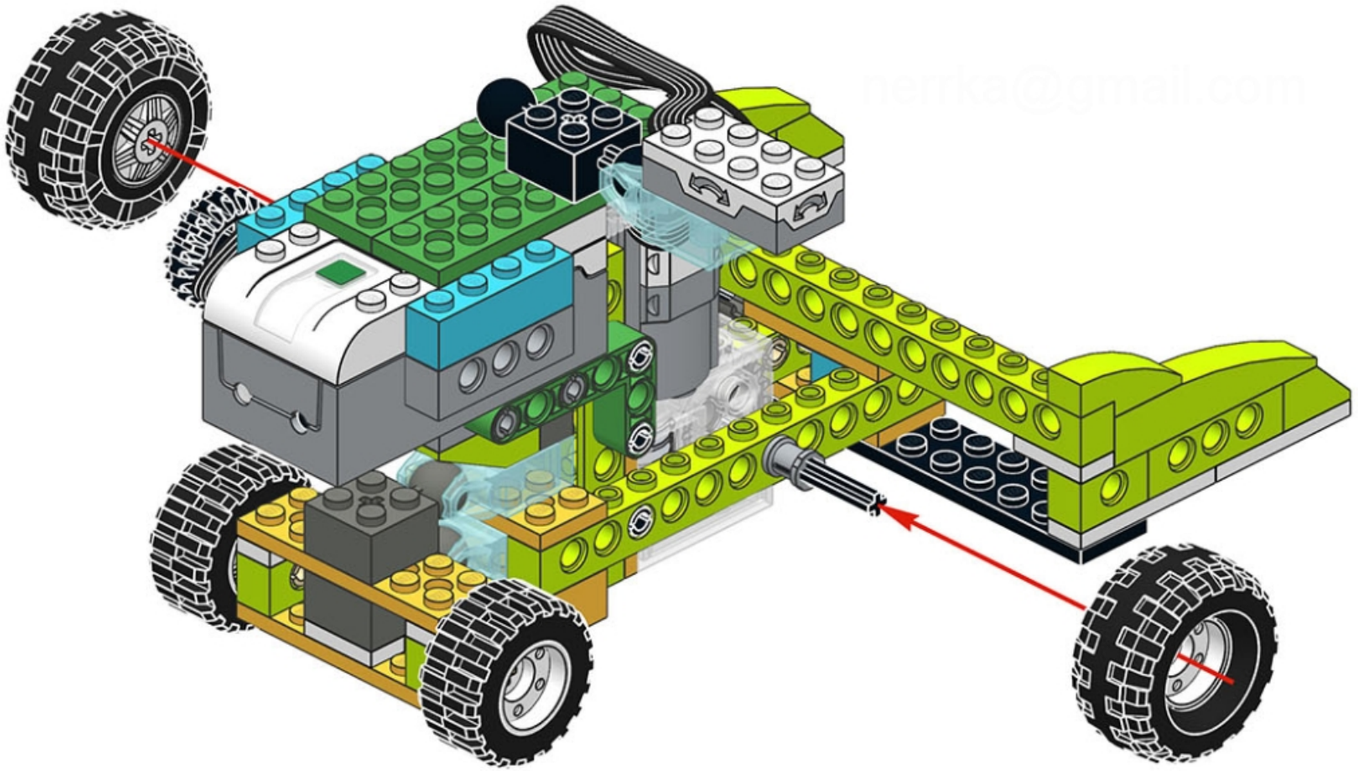

nerka@gmail.com

nerrka@gmail.com

ROBORISE-IT!
ROBOTIC EDUCATION

40

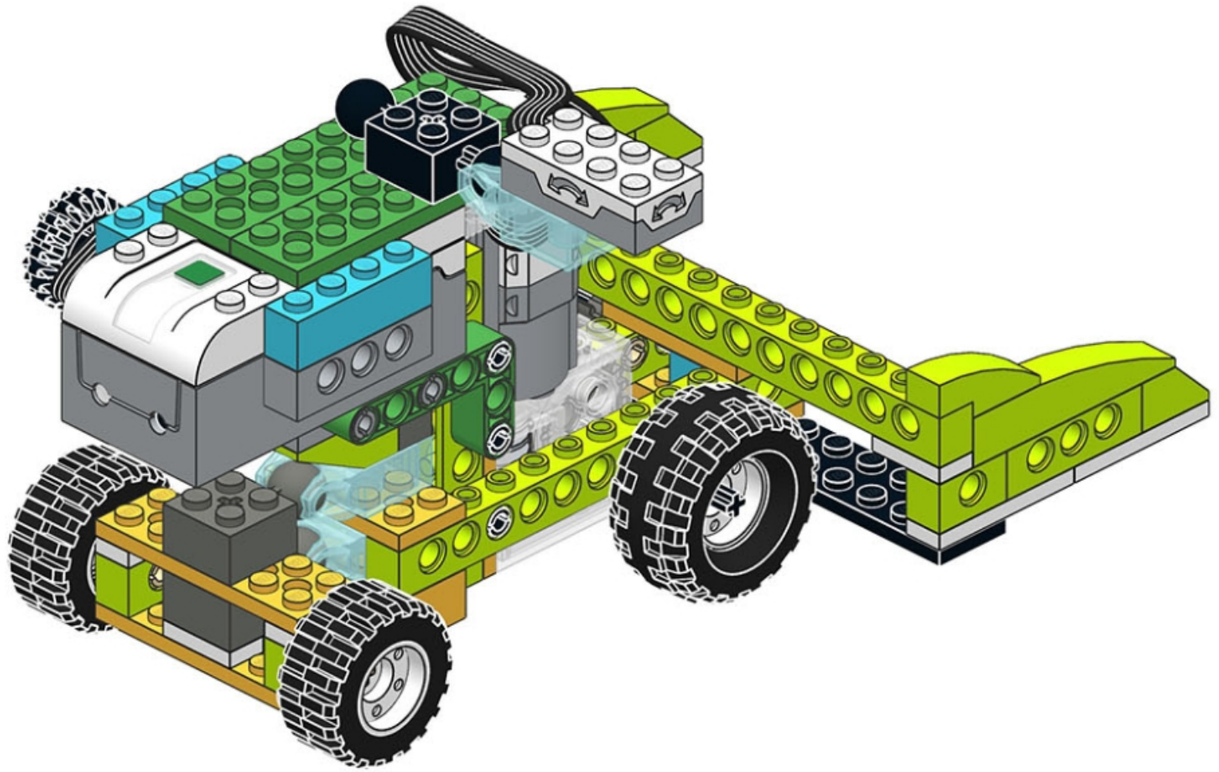

henrka@gmail.com

ROBORISE-IT!
ROBOTIC EDUCATION

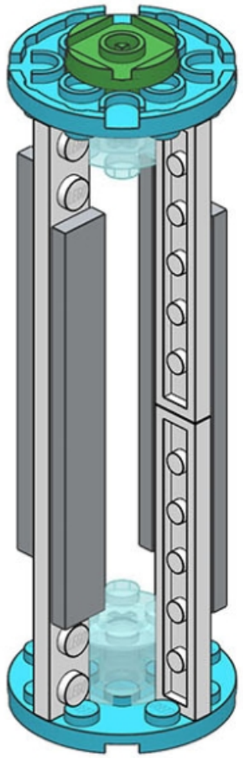

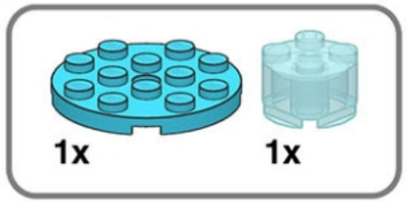

1

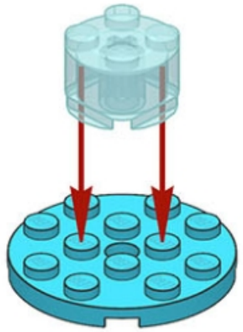

2

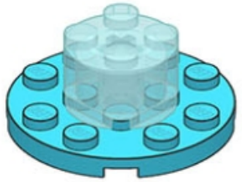

2x

ROBORISE-IT!
ROBOTIC EDUCATION

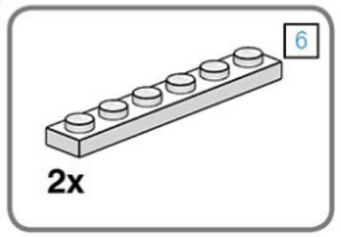

1

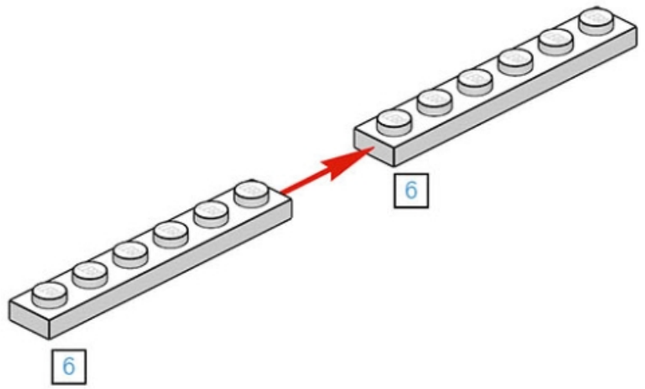

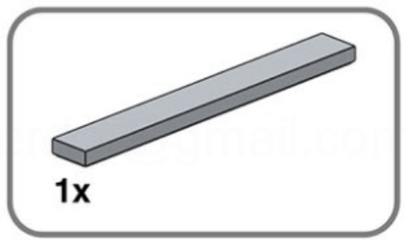

2

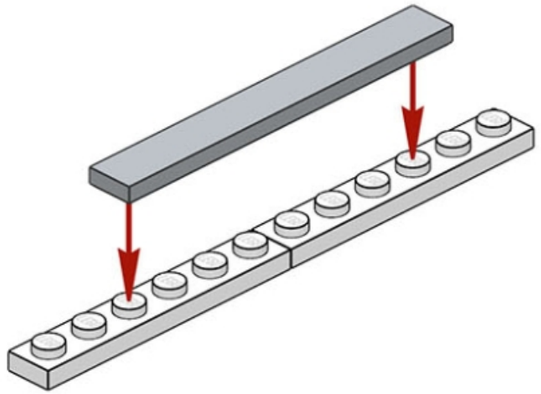

3

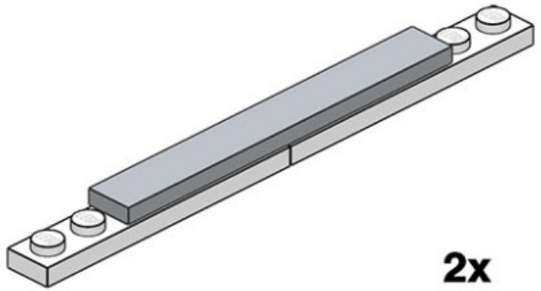

ROBORISE-IT!
ROBOTIC EDUCATION

43

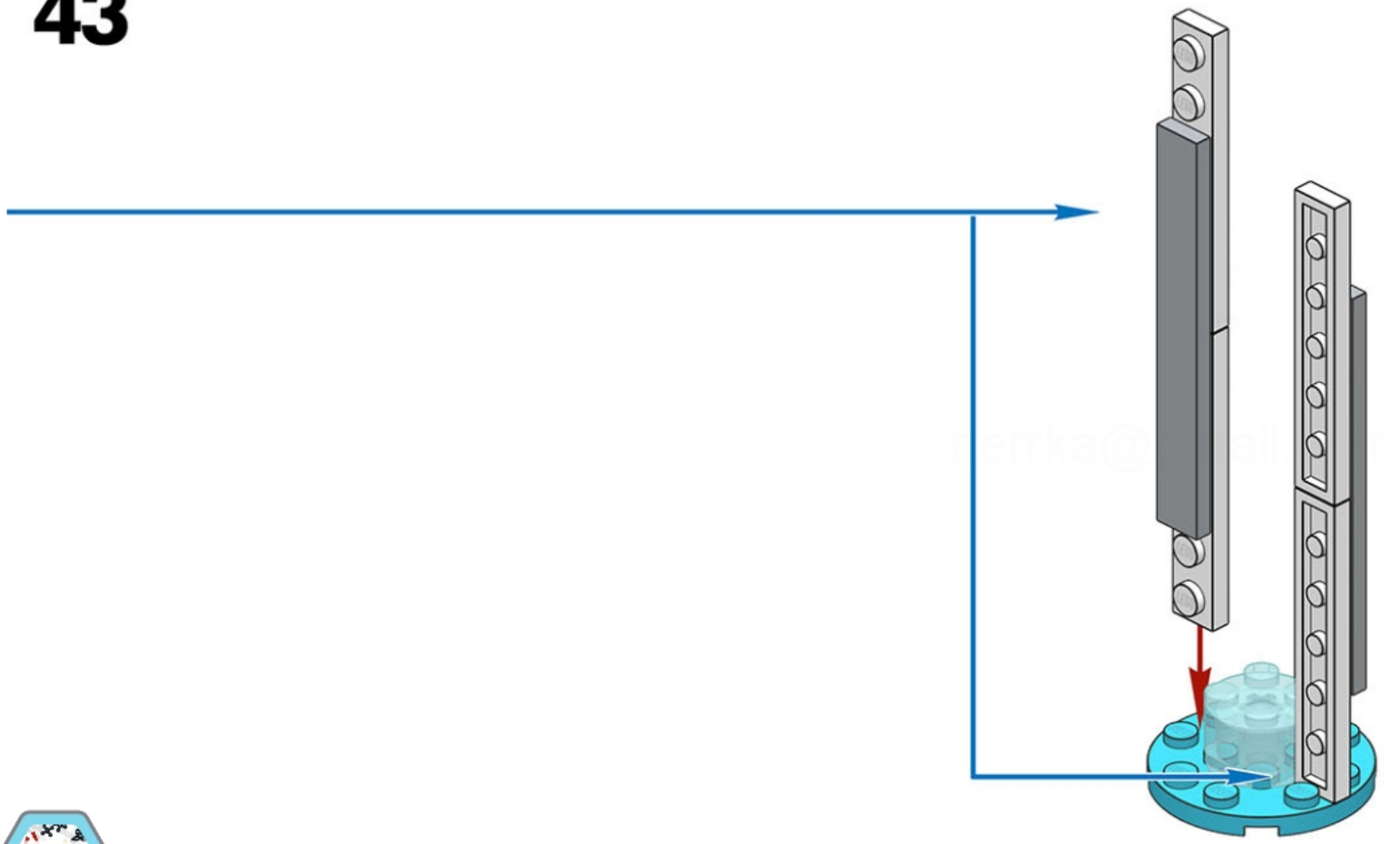

ROBORISE-IT!
ROBOTIC EDUCATION

44

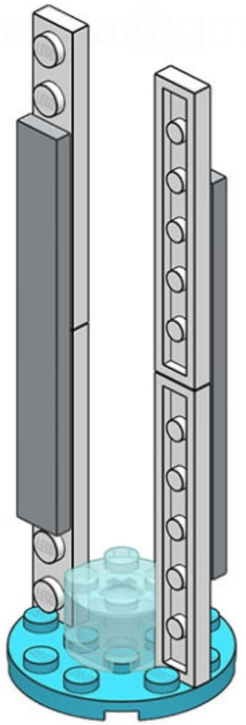

44/52

0

64

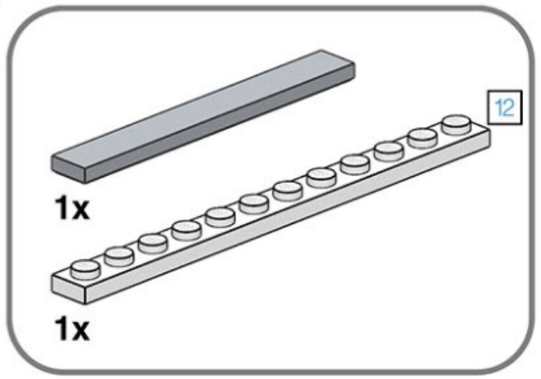

1

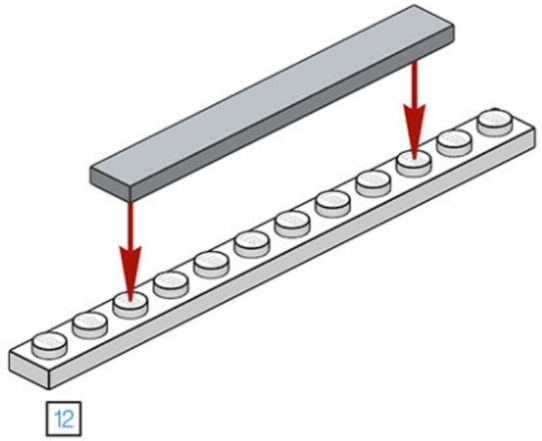

2

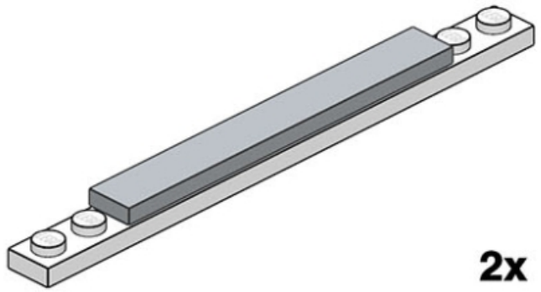

narrka@gmail.com

nerrka@gmail.com

ROBORISE-IT!
ROBOTIC EDUCATION

46

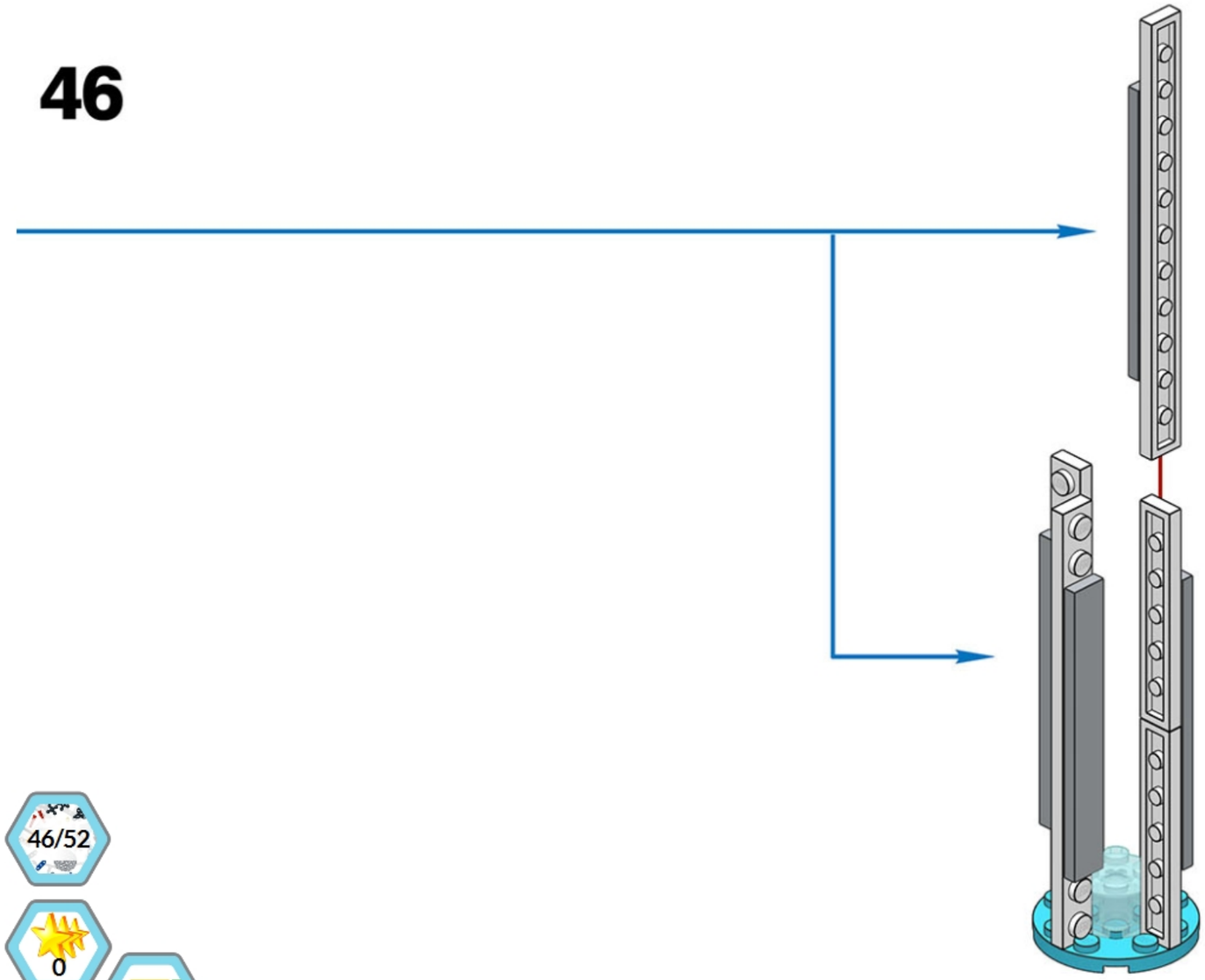

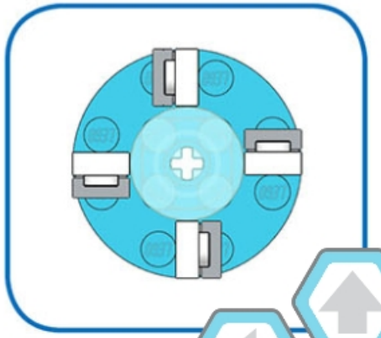

ROBORISE-IT!
ROBOTIC EDUCATION

47

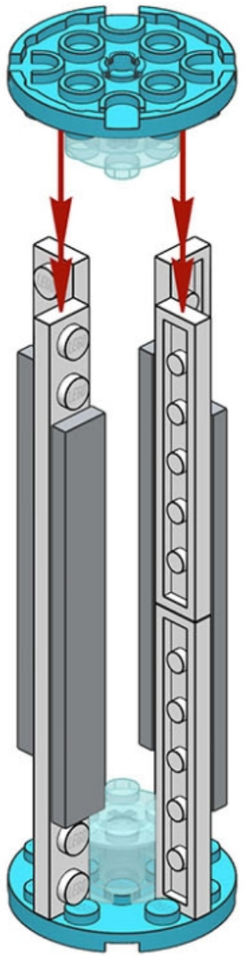

nerrka@gmail.com

ROBORISE-IT!
ROBOTIC EDUCATION

48

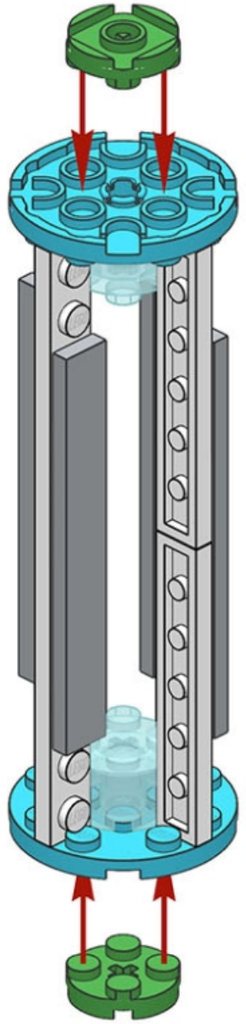

nerika@gmail.com

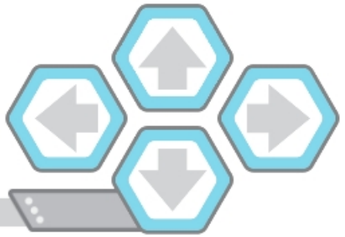

ROBORISE-IT!
ROBOTIC EDUCATION

49

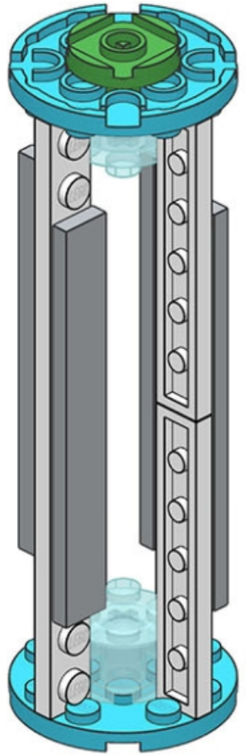

nerka@gmail.com

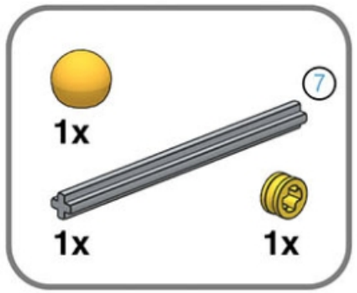

50

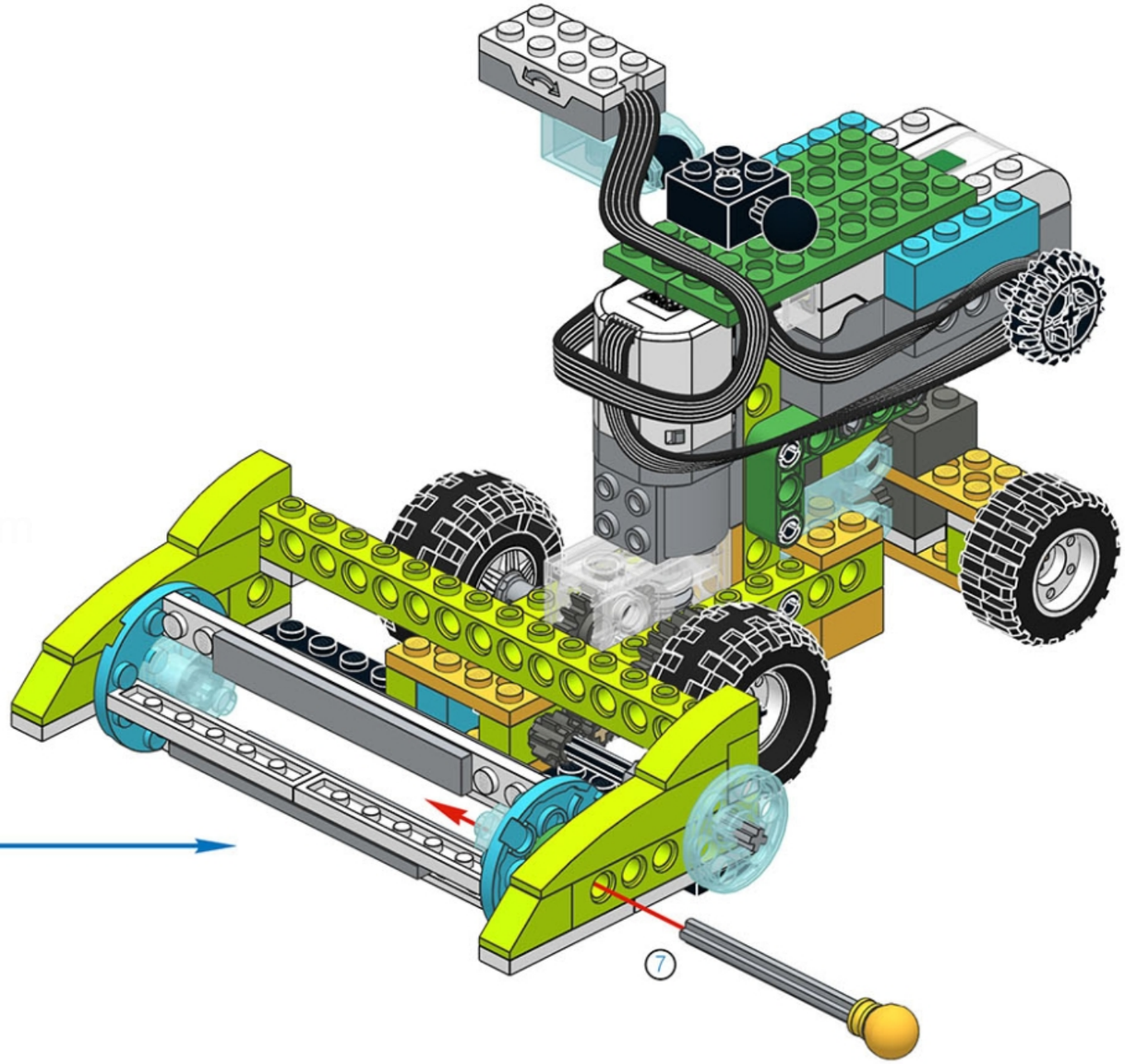

ROBORISE-IT!
ROBOTIC EDUCATION

50/52
0
70

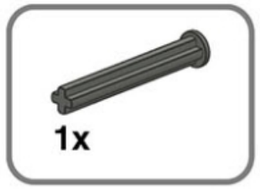

51

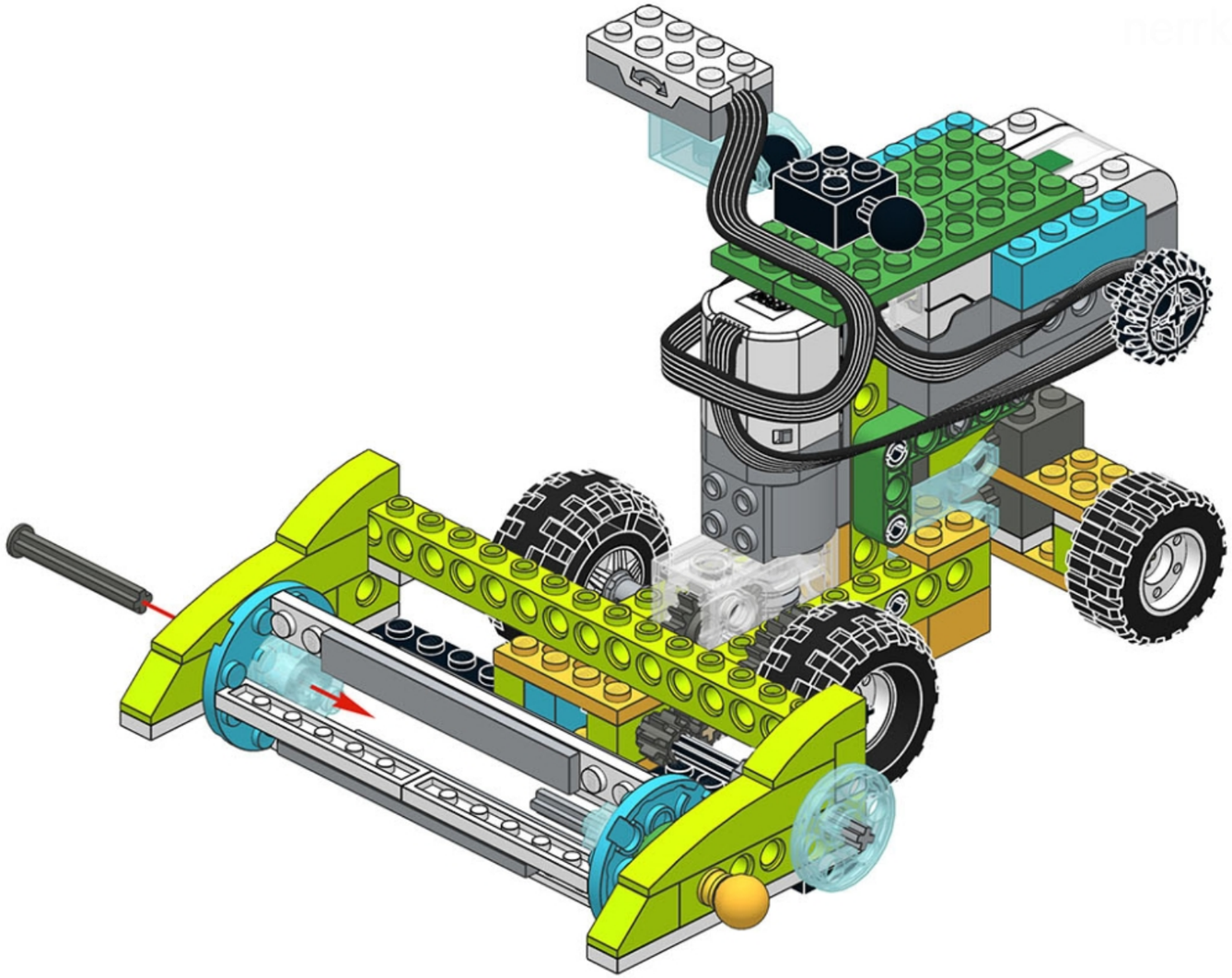

ROBORISE-IT!
ROBOTIC EDUCATION

ROBORISE-IT!
ROBOTIC EDUCATION

1x

52

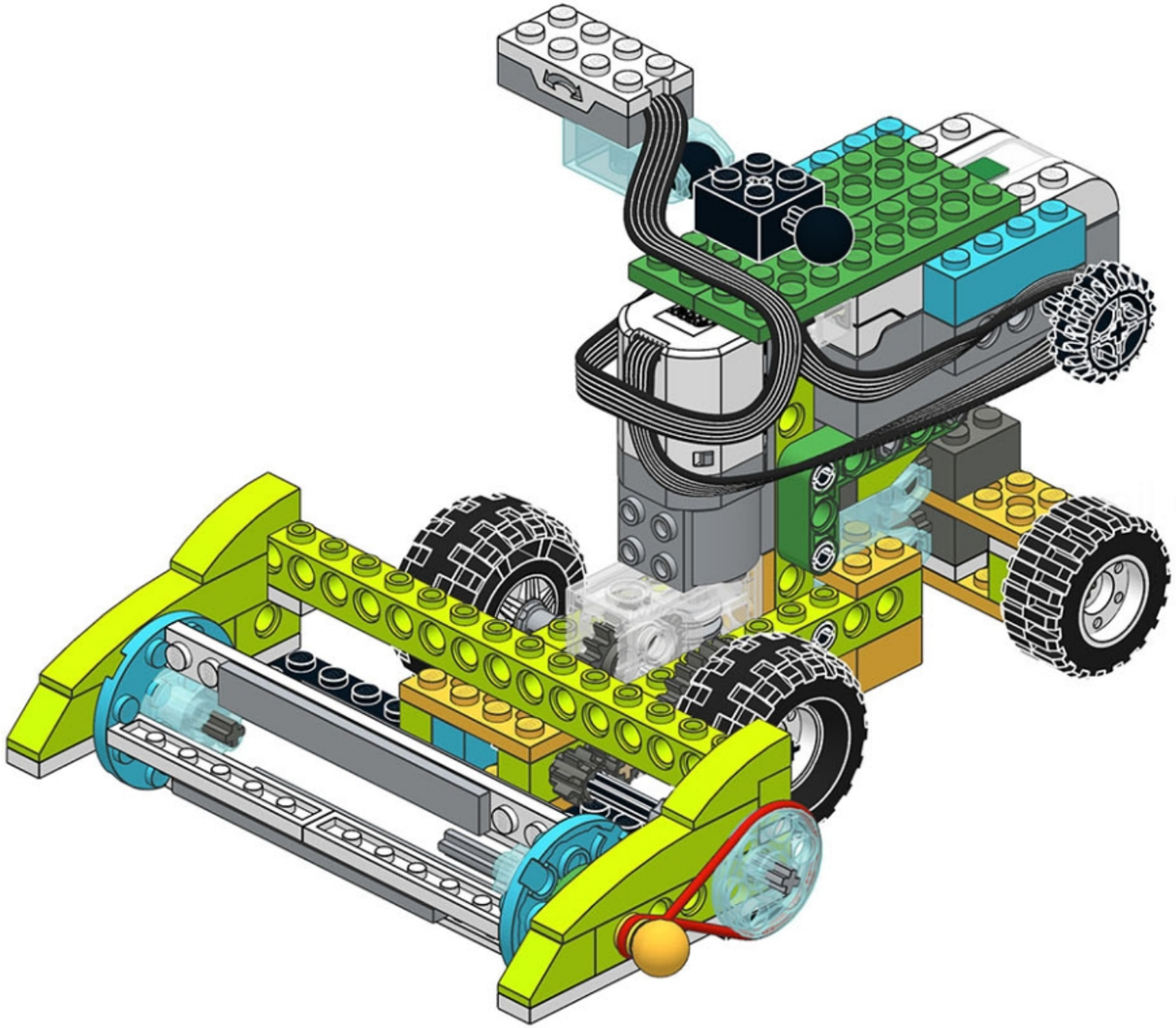

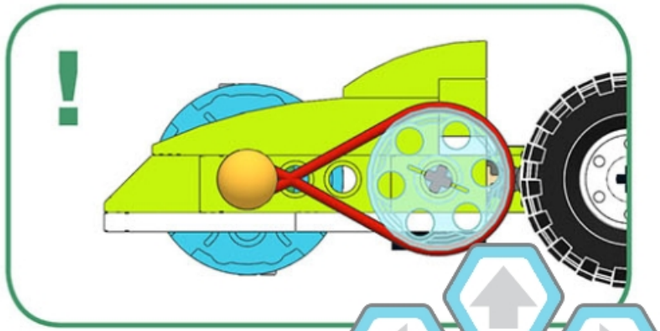

52/52

0

72

Enhanced version

ROBORISE-IT!
ROBOTIC EDUCATION

Add the cabin, unloading auger and some visual improvements to your robot!

0

73

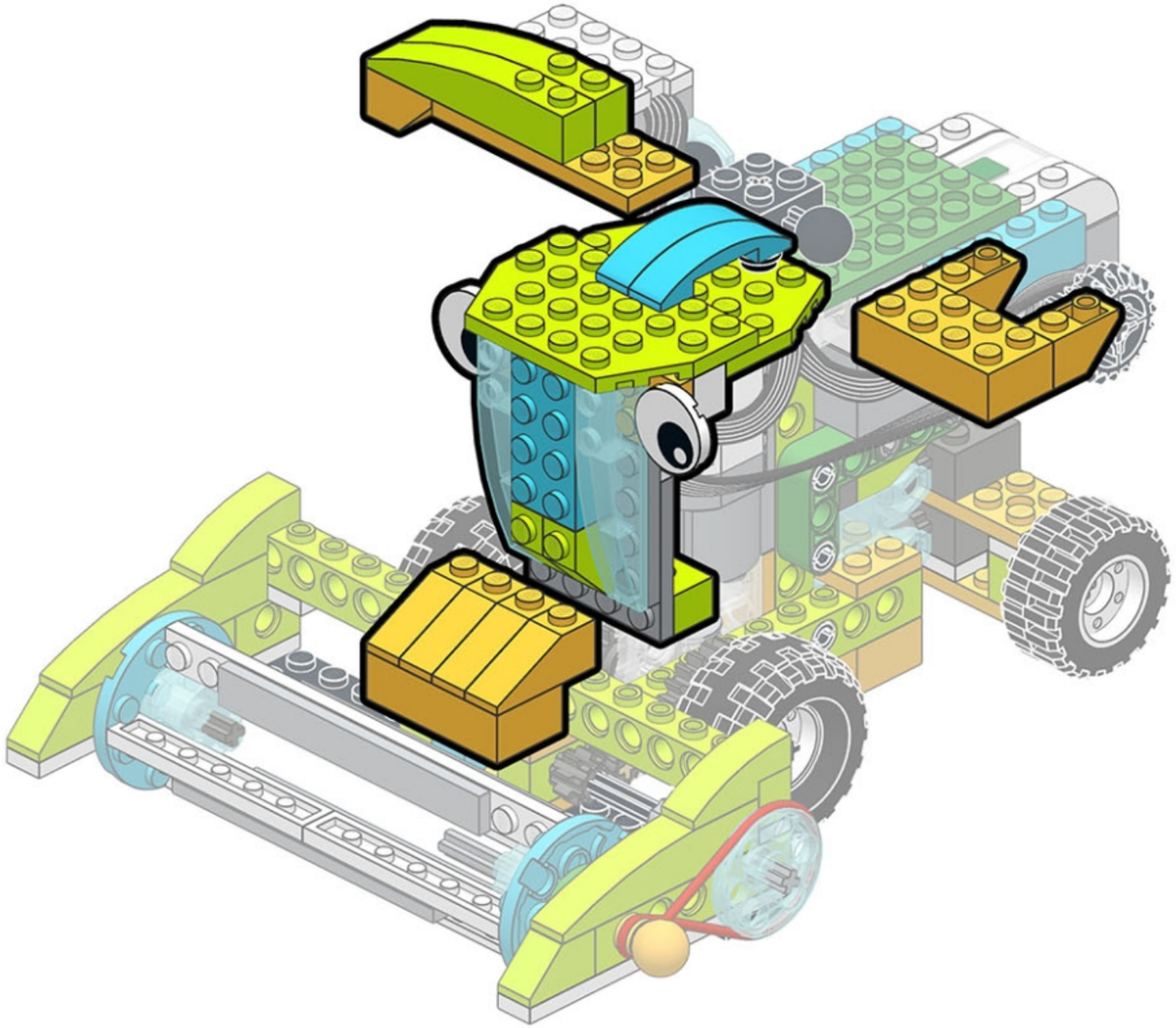

ROBORISE-IT!
ROBOTIC EDUCATION

1/13

0

74

ROBORISE-IT!
ROBOTIC EDUCATION

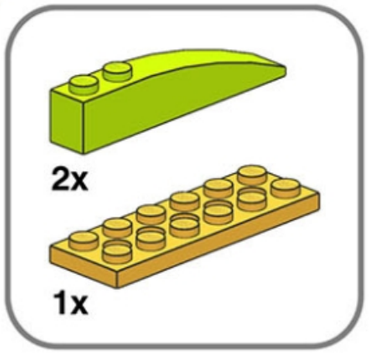

1

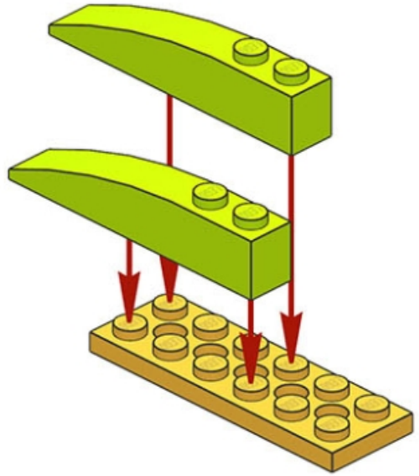

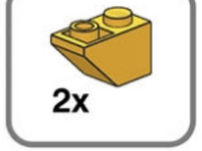

2

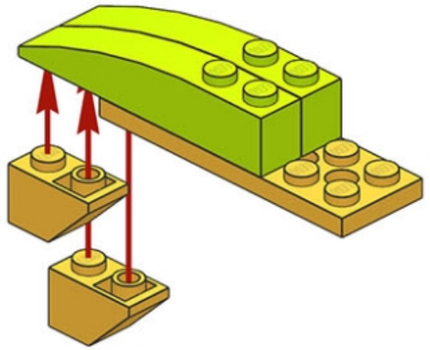

3

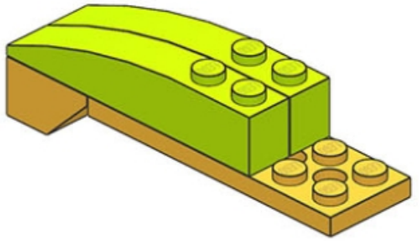

2/13

0

75

ROBORISE-IT!
ROBOTIC EDUCATION

54

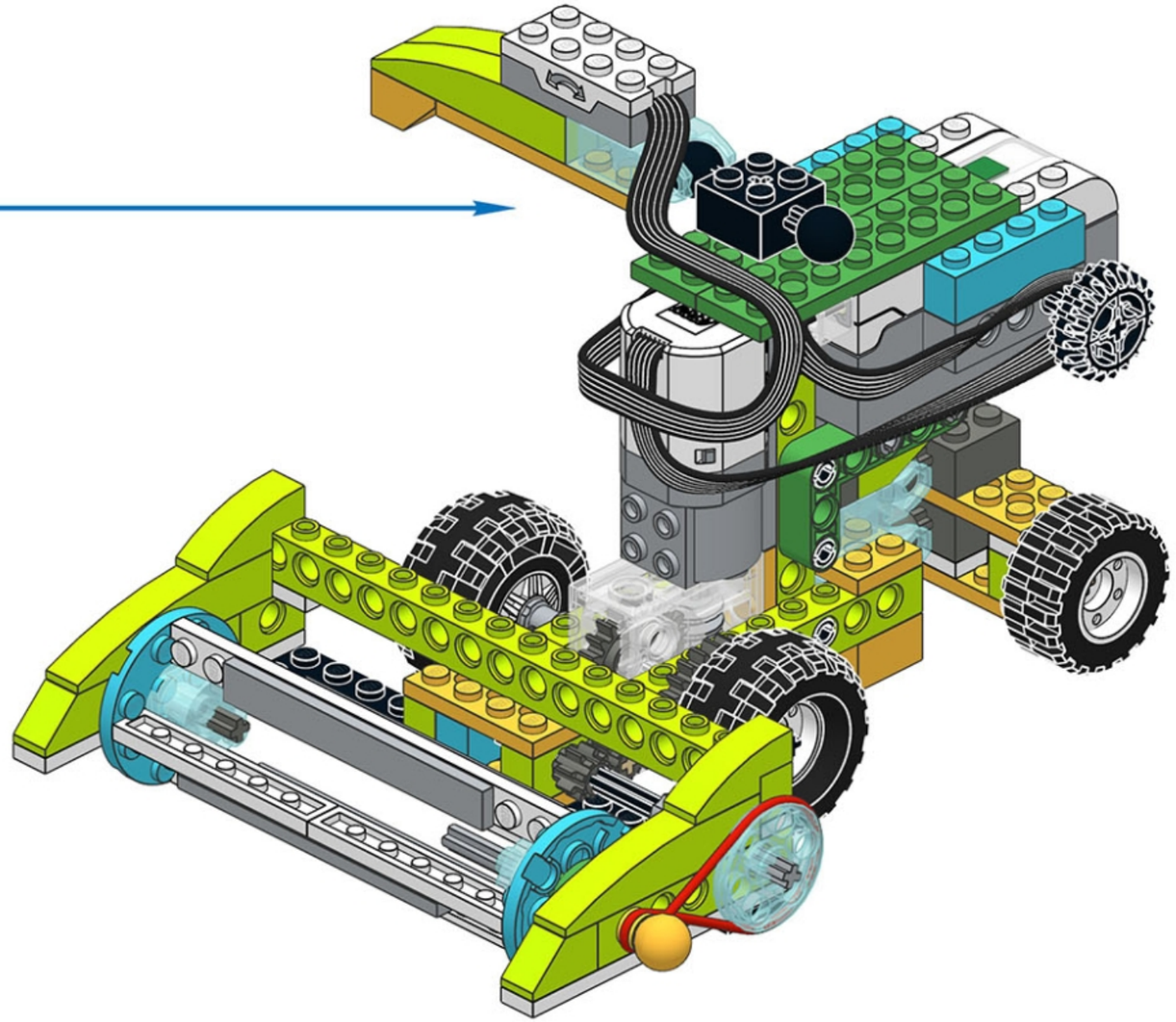

3/13

0

76

ROBORISE-IT!
ROBOTIC EDUCATION

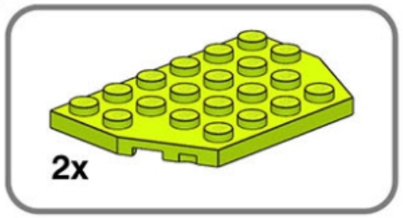

1

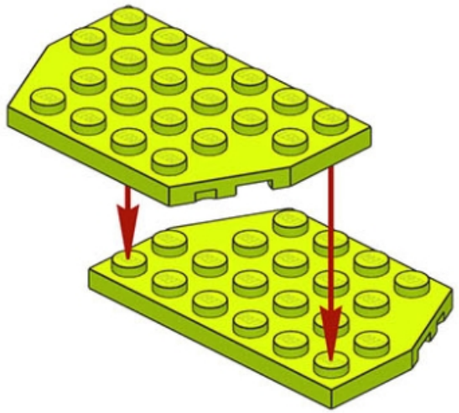

2

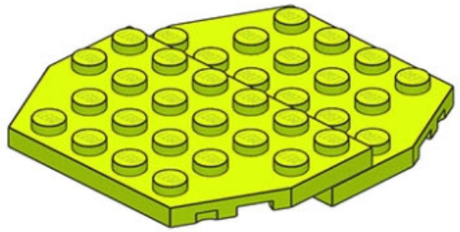

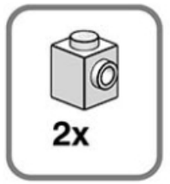

3

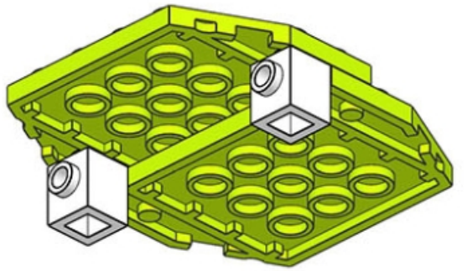

nerka@gmail.com

ROBORISE-IT!
ROBOTIC EDUCATION

4

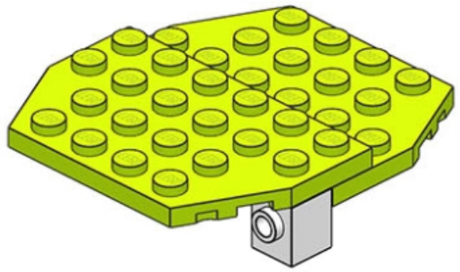

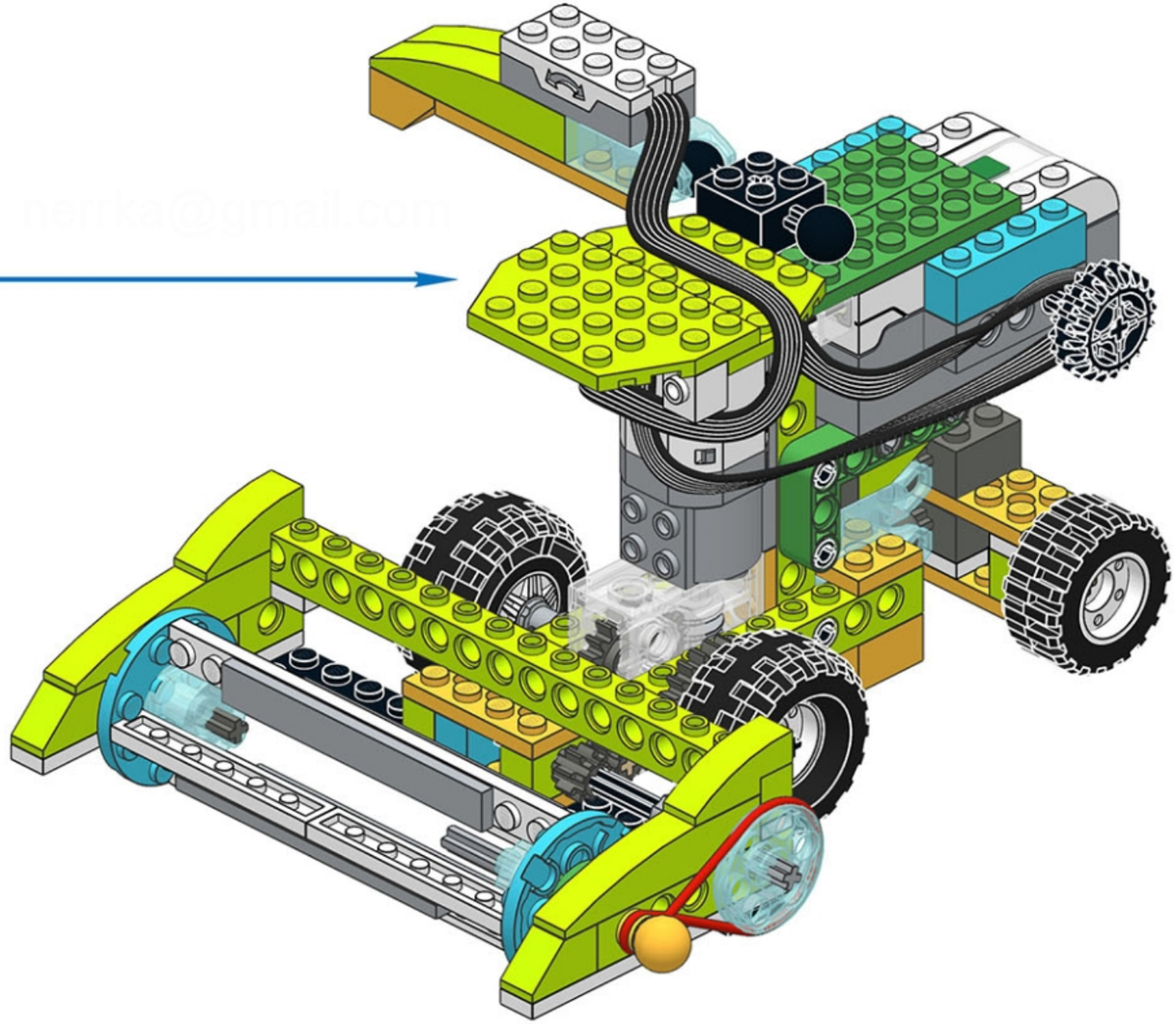

nerrka@gmail.com

5/13

0

78

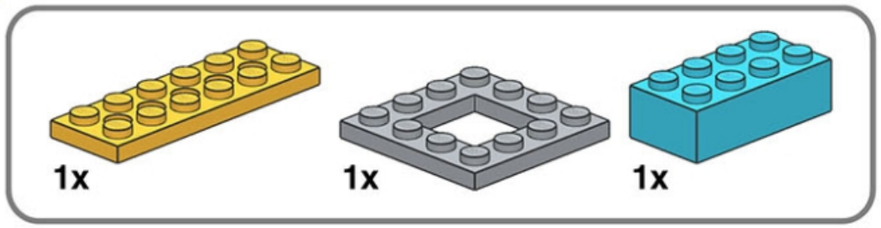

1

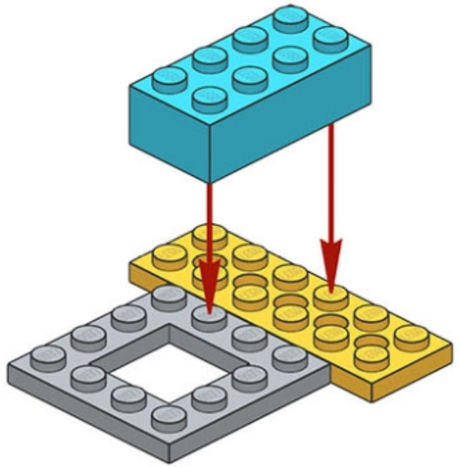

2

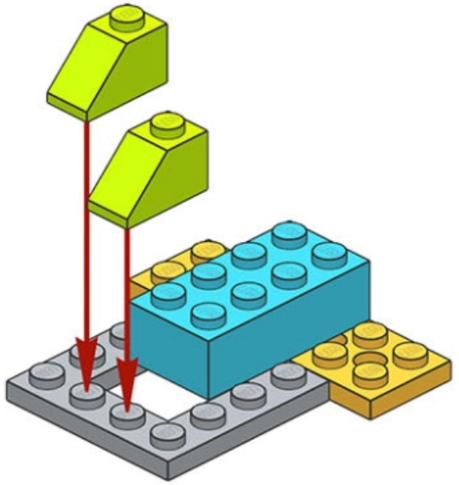

ROBORISE-IT!
ROBOTIC EDUCATION

2x

3

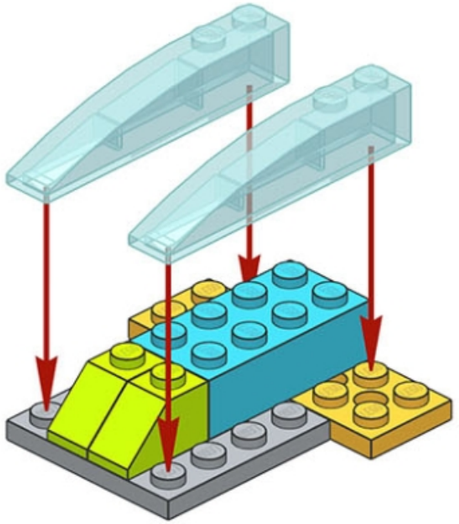

4

1x

1x

4

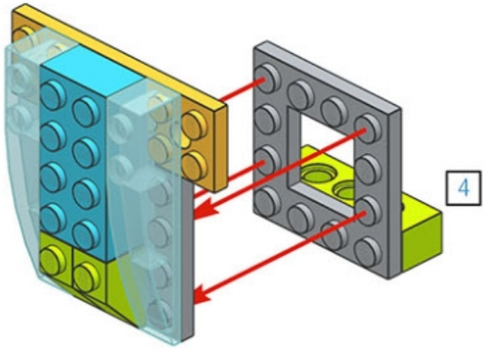

2x

5

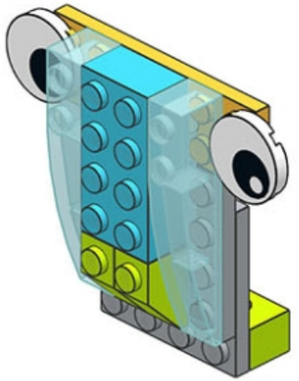

7/13

0

80

ROBORISE-IT!
ROBOTIC EDUCATION

nerrka@gmail.com

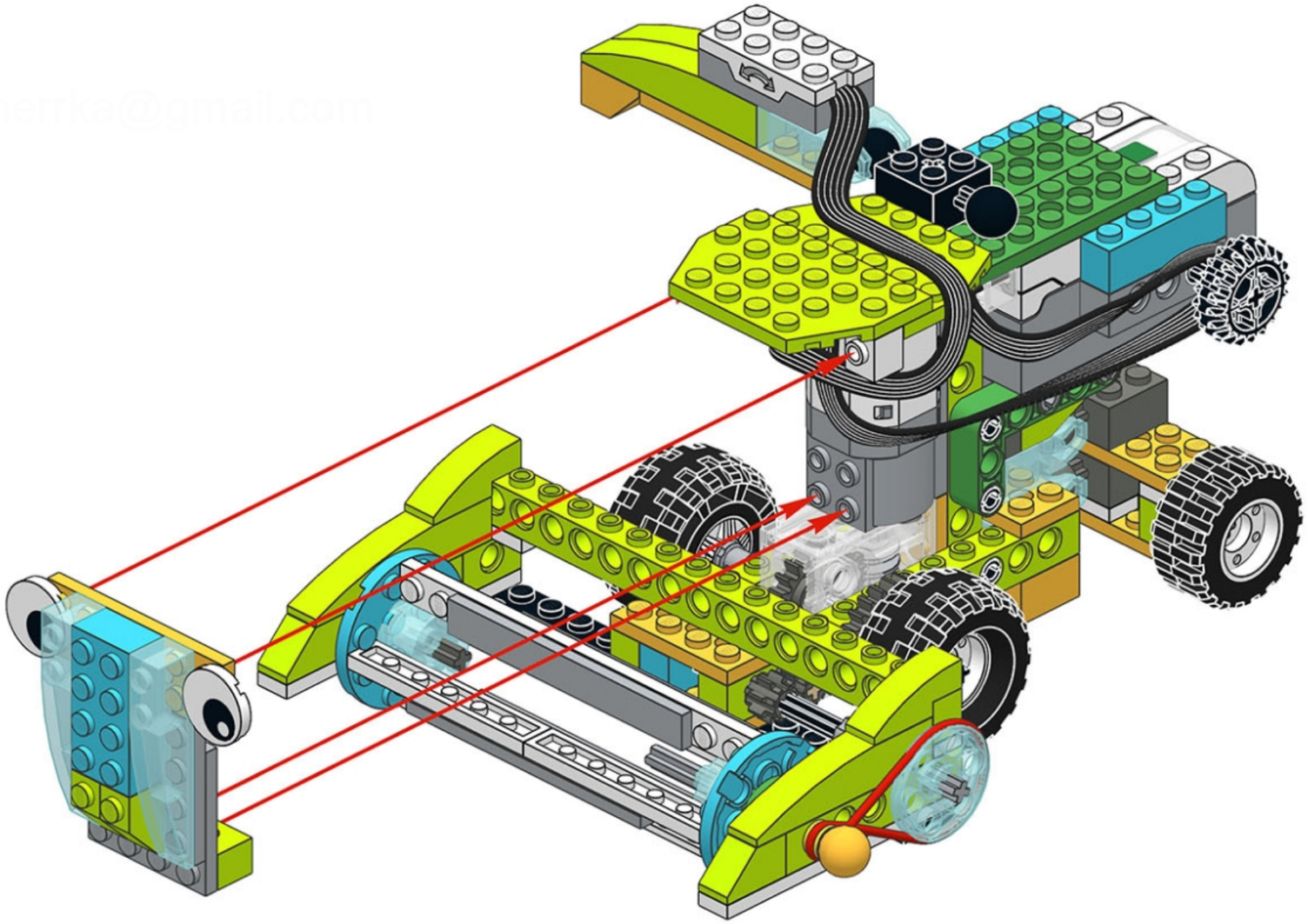

nerka@gmail.com

ROBORISE-IT!
ROBOTIC EDUCATION

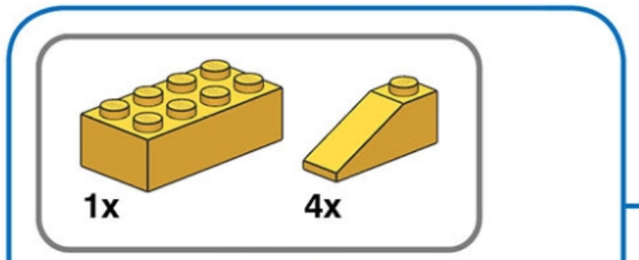

1

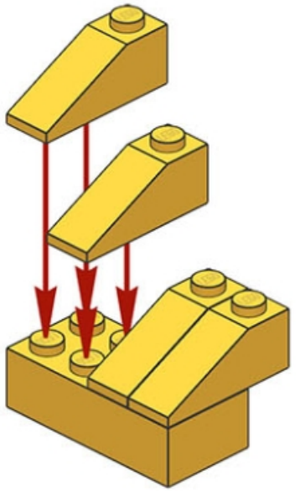

2

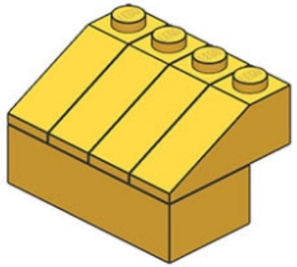

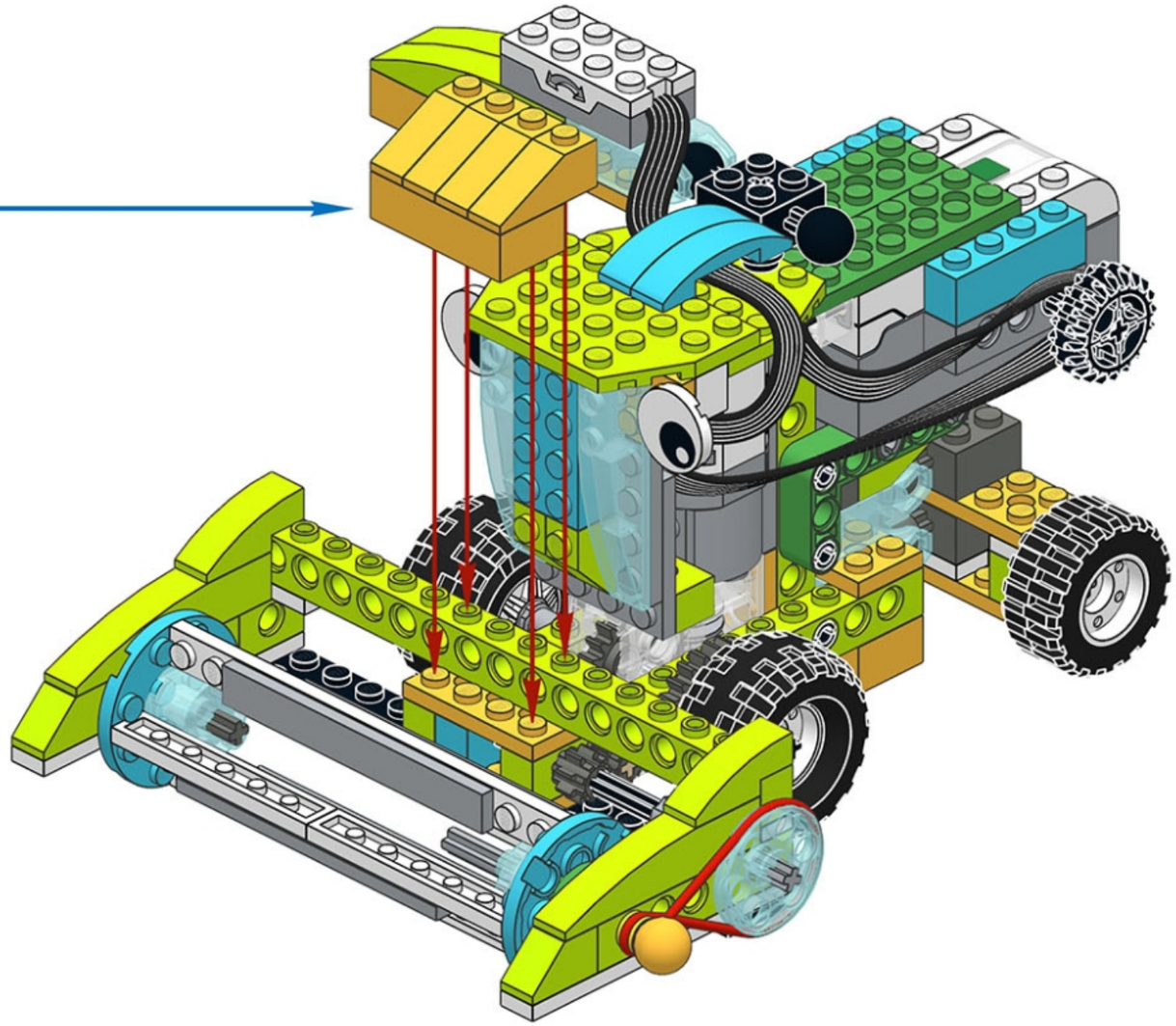

9/13

0

82

ROBORISE-IT!
ROBOTIC EDUCATION

61

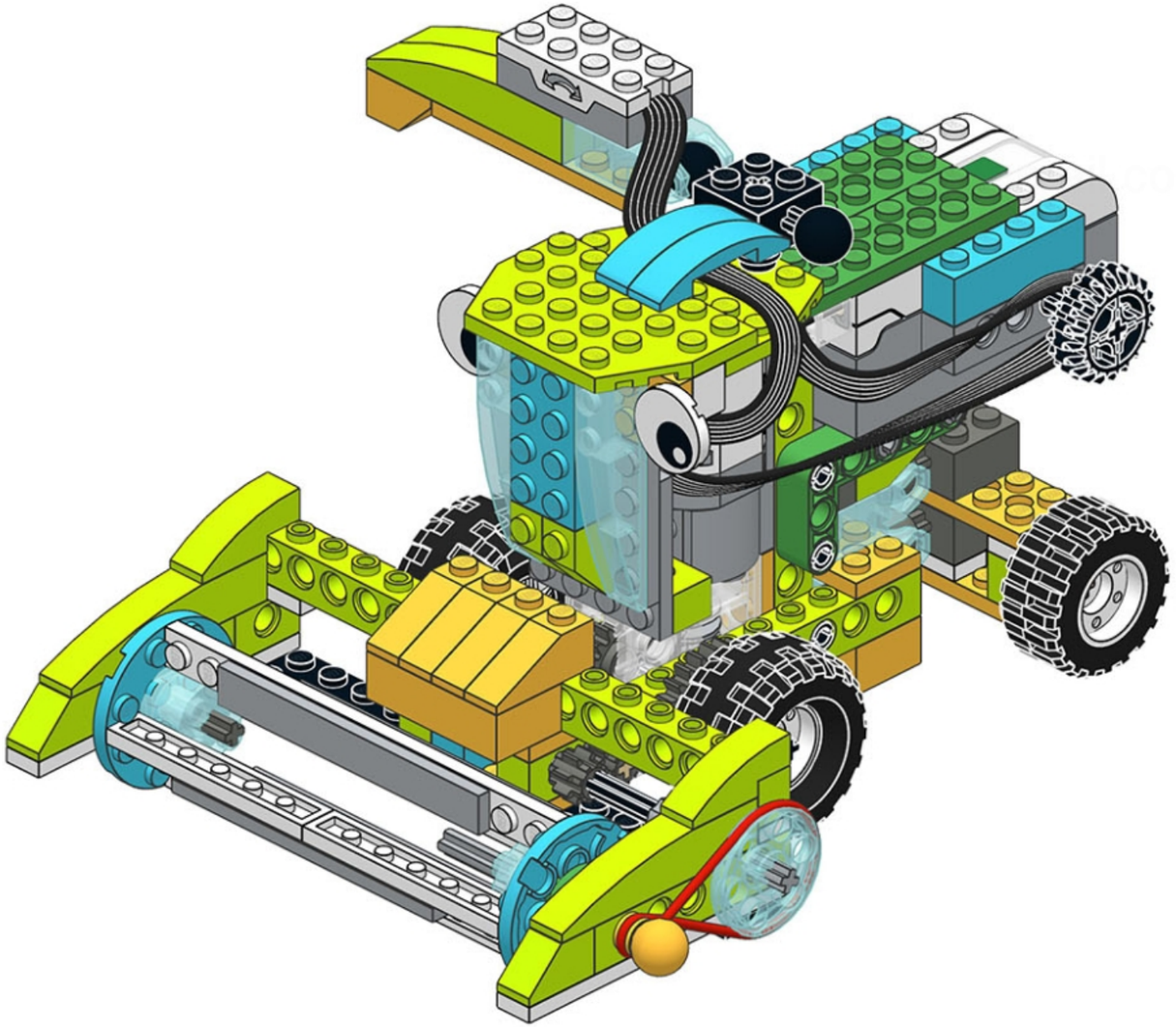

10/13

0

83

ROBORISE-IT!
ROBOTIC EDUCATION

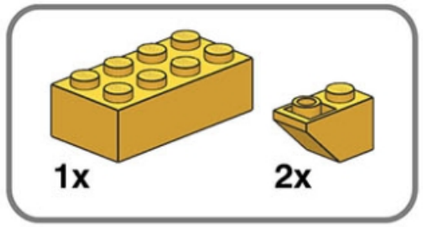

62

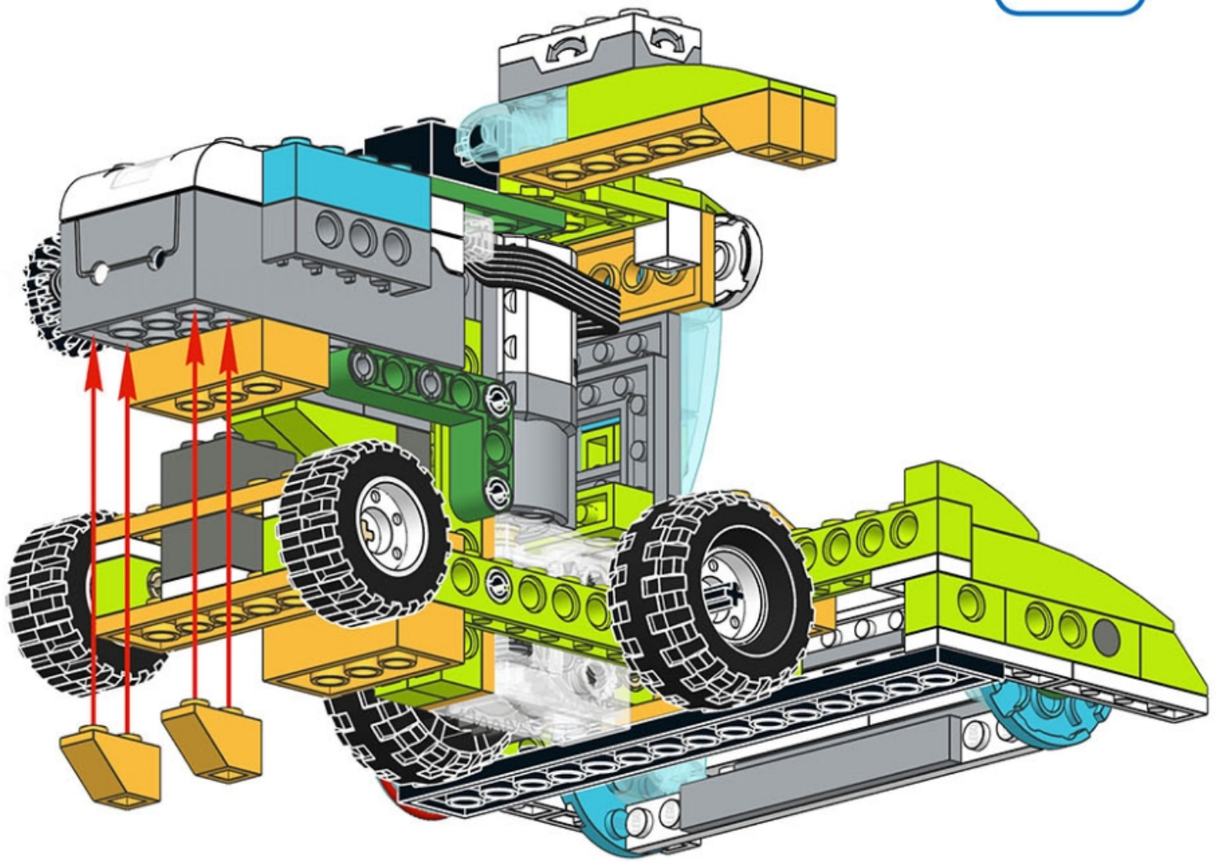

11/13

0

84

ROBORISE-IT!
ROBOTIC EDUCATION

63

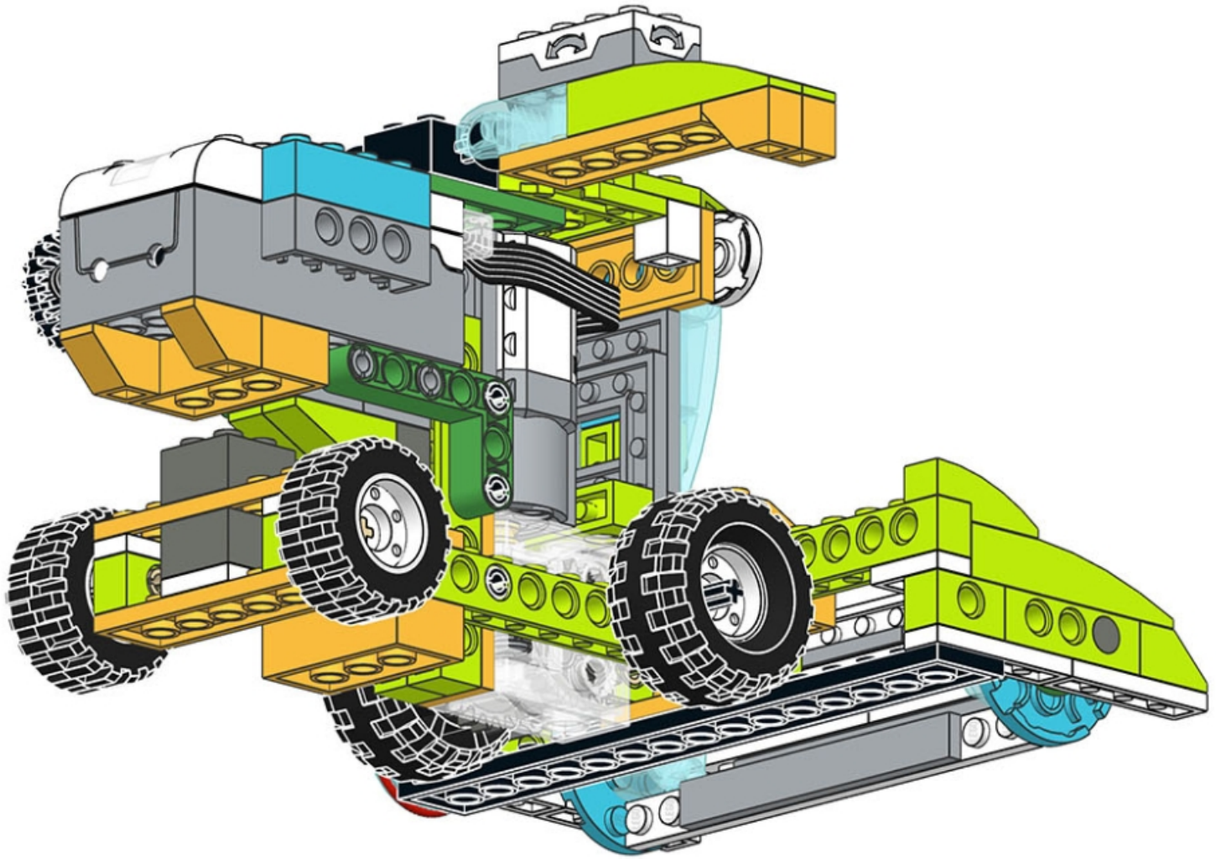

12/13

0

85

nerka@gmail.com

ROBORISE-IT!
ROBOTIC EDUCATION

64

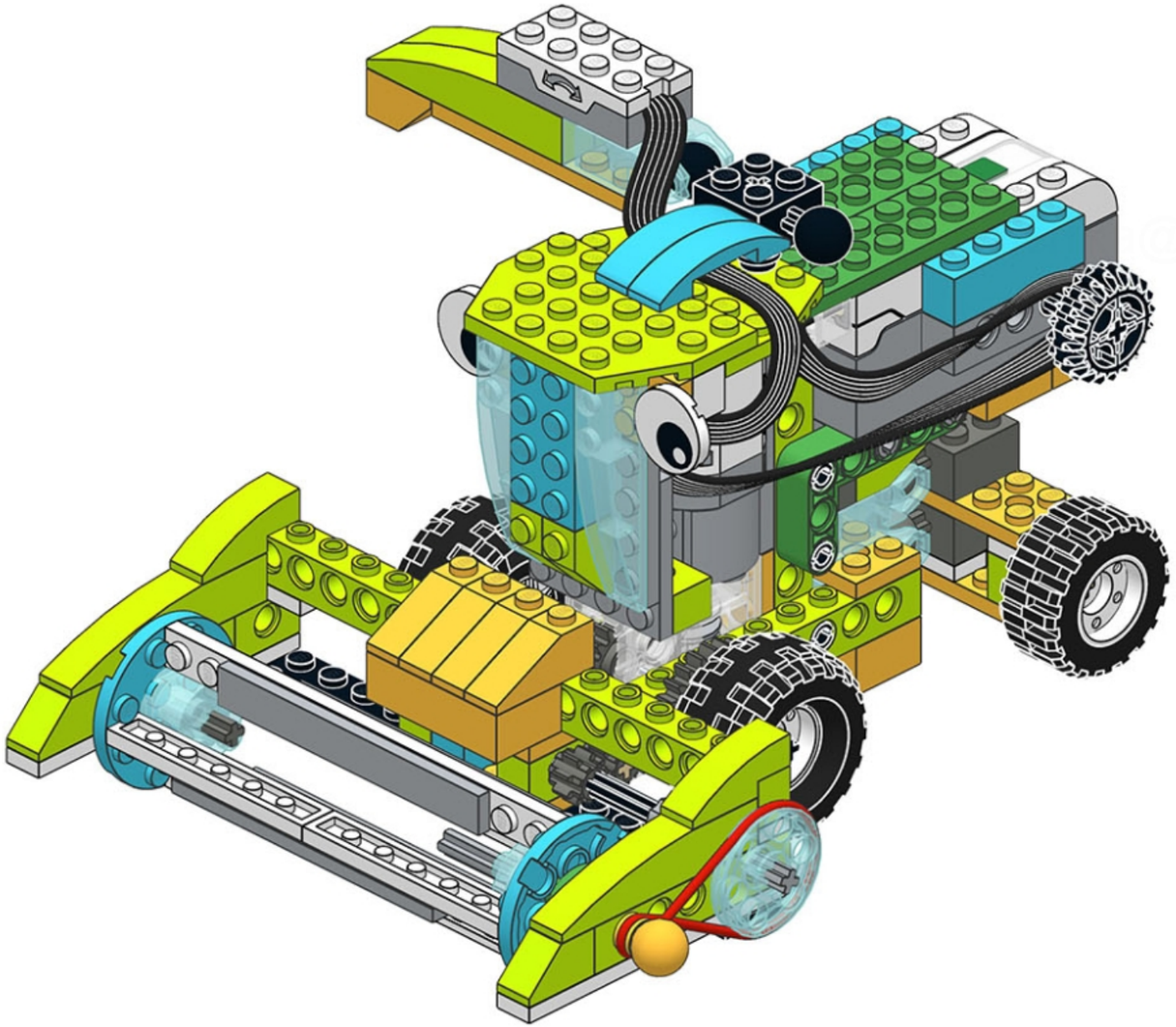

13/13

0

86

ROBORISE-IT!
ROBOTIC EDUCATION

1x

65

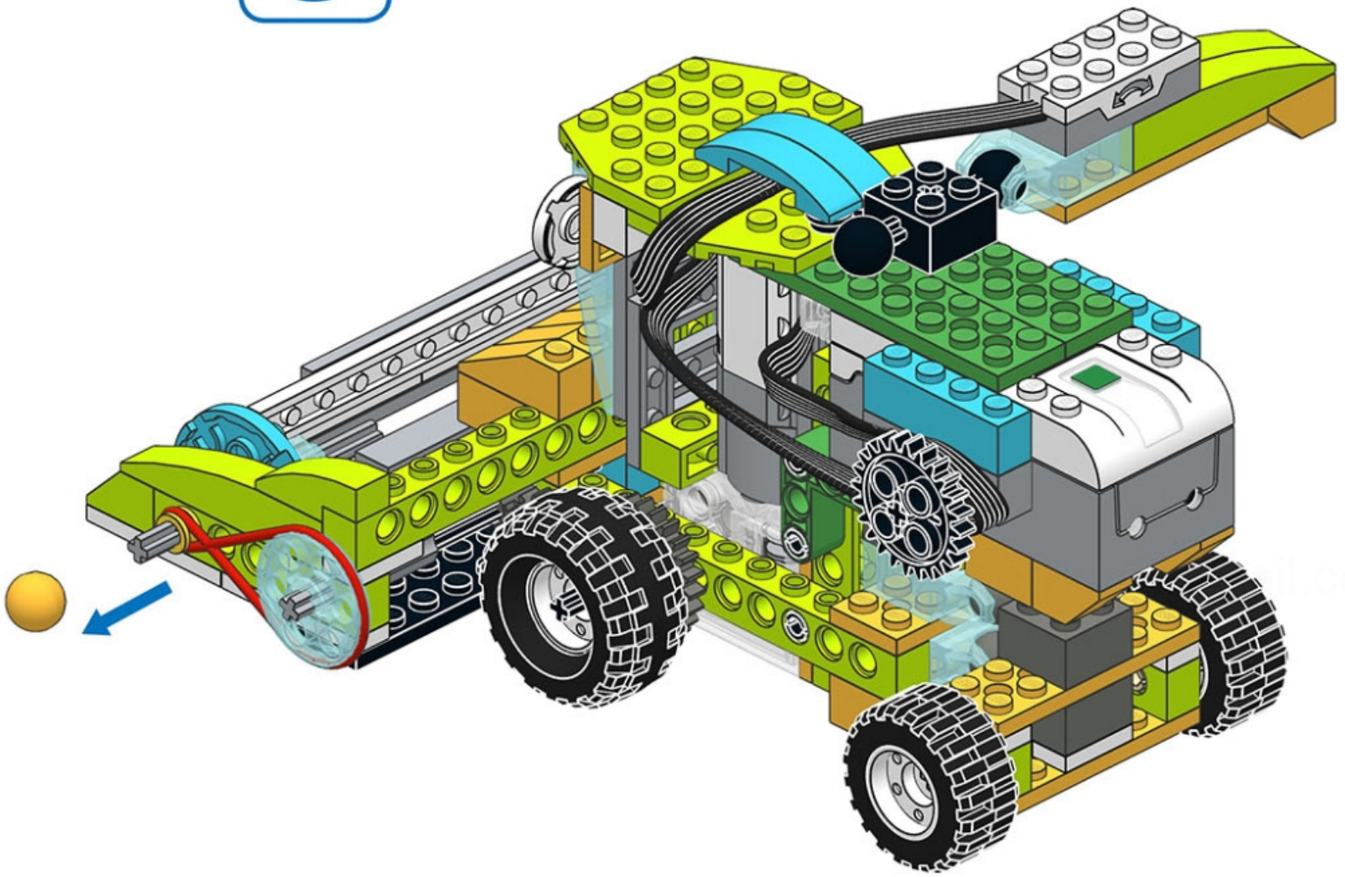

1/4

0

94

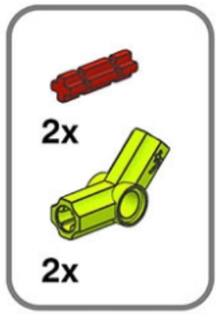

66

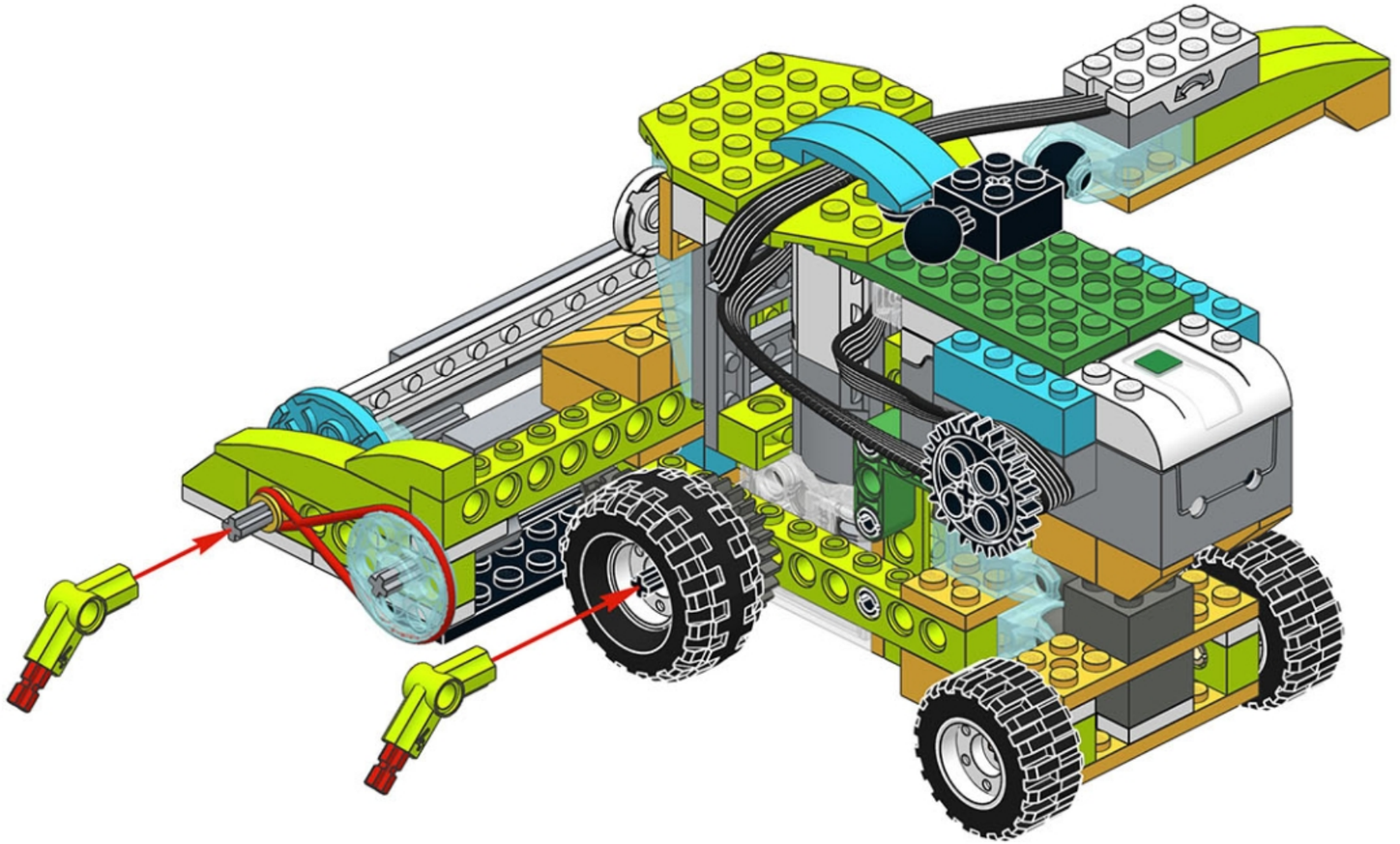

ROBORISE-IT!
ROBOTIC EDUCATION

67

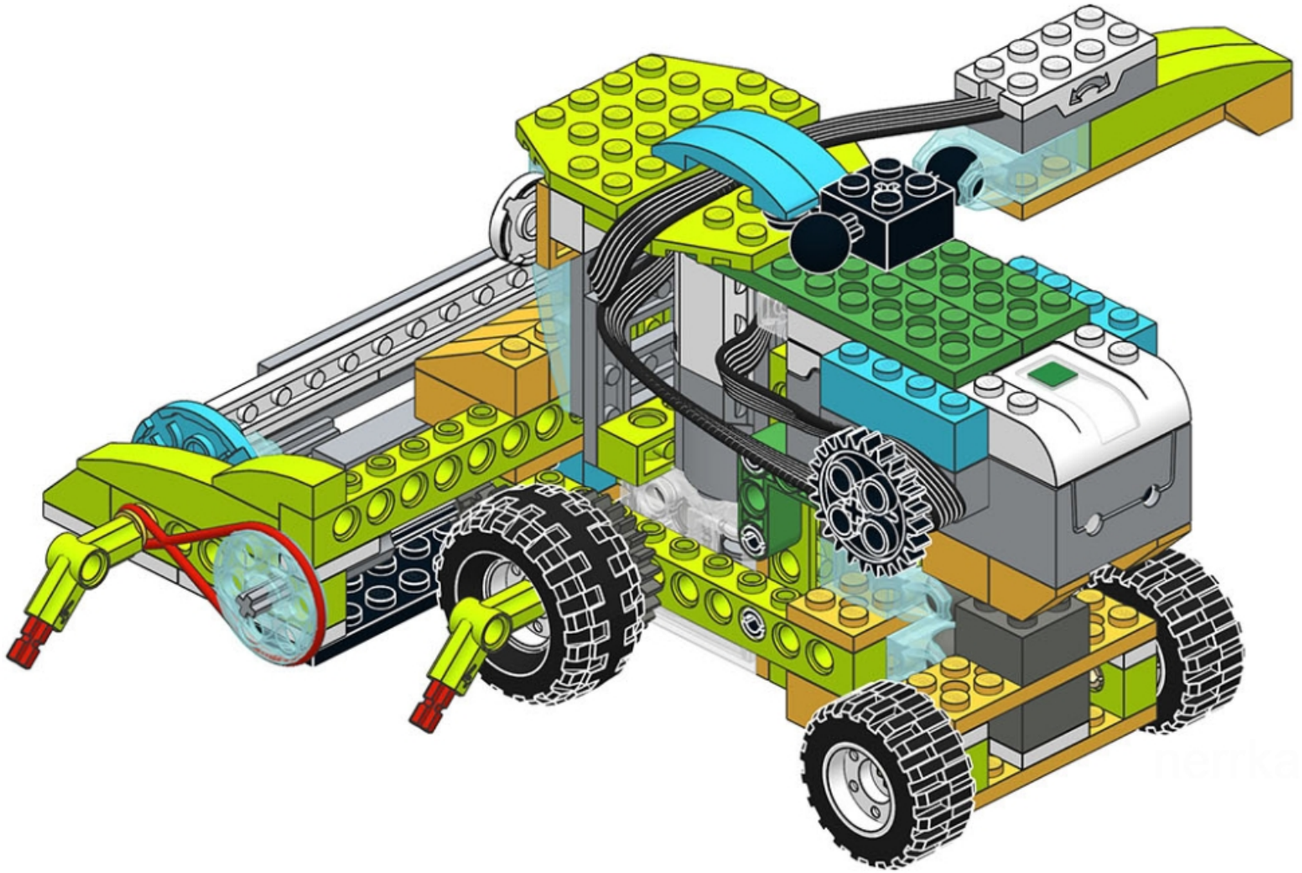

herrka@gmail.com

ROBORISE-IT!
ROBOTIC EDUCATION

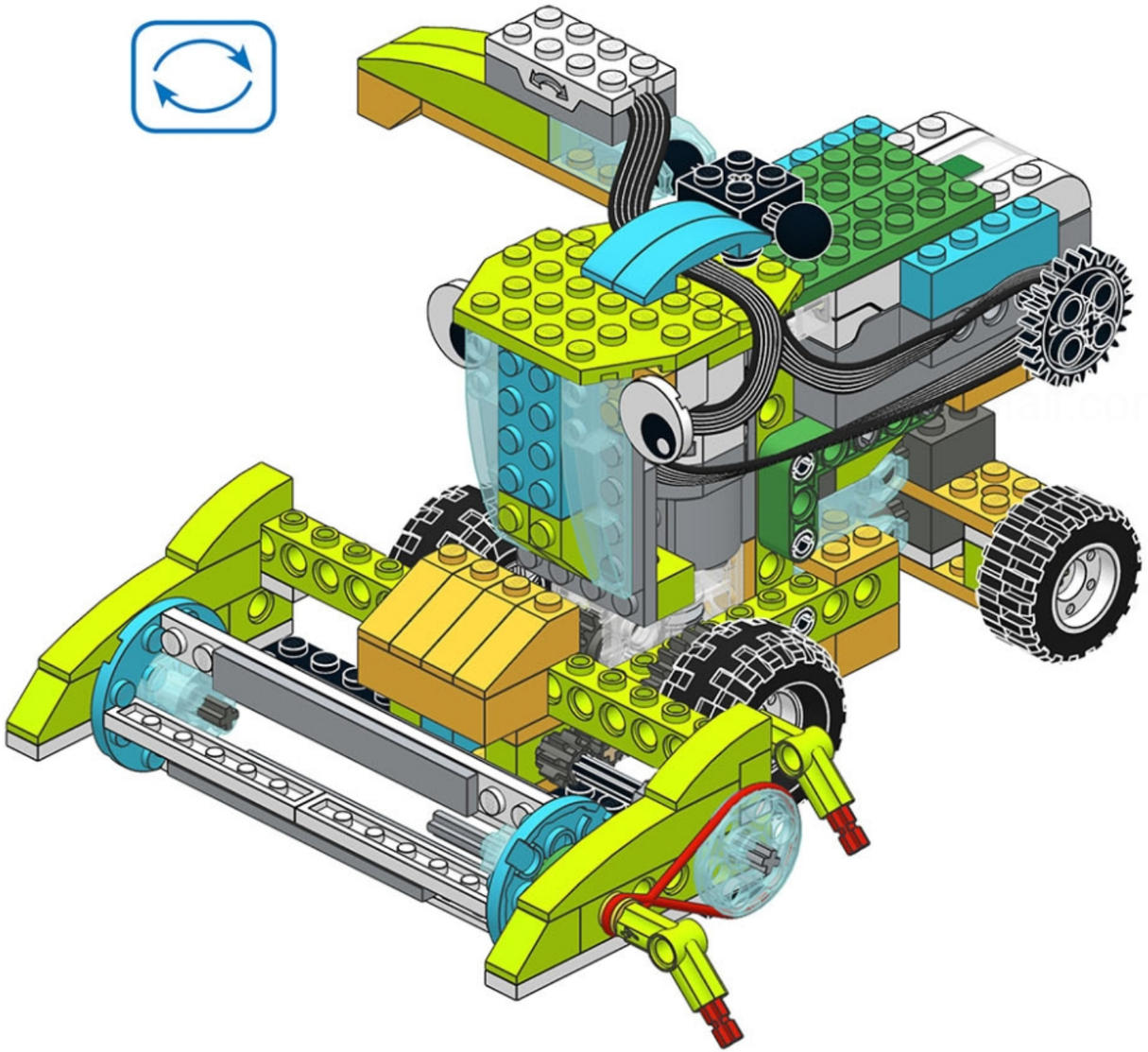

Harvester

ROBORISE-IT!
ROBOTIC EDUCATION

Harvester

0

1

New day at the robots` factory

ROBORISE-IT!
ROBOTIC EDUCATION

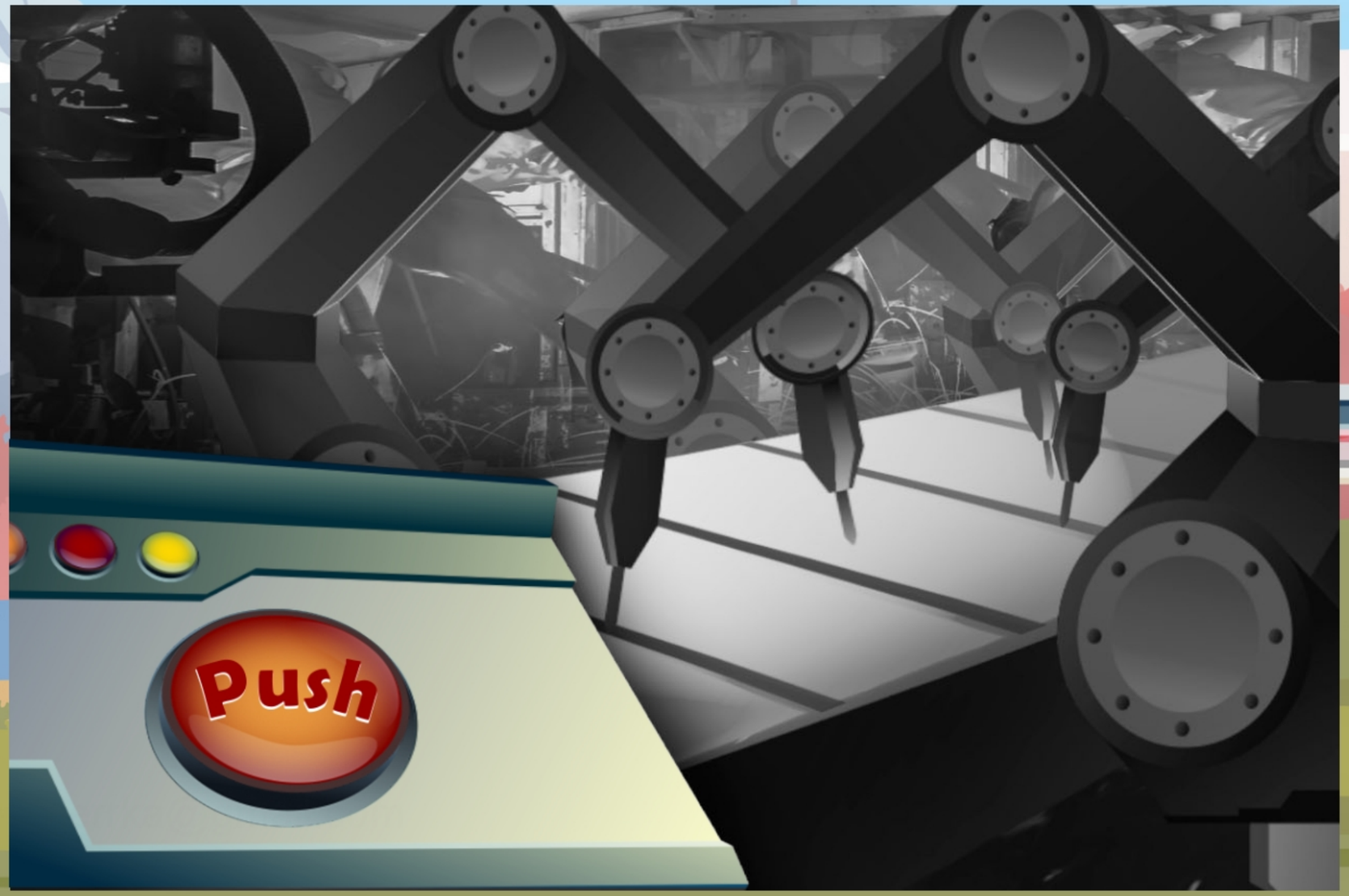

0

2

New day at the robots` factory

ROBORISE-IT!
ROBOTIC EDUCATION

Hello!
Agro makes good job! Now we must to harvest.This is very responsible task that must be done in strictly scheduled time. That's why autonomous harvesters that may work 24/7 is a perfect solution. Our next task is creating of such harvesters.

0

3

TASK

ROBORISE-IT!
ROBOTIC EDUCATION

TASK

- to develop the robotised harvester

Steps

- to know more about the robotised agriculture
- to define the main features of the harvester
- to build the robot and test it

0

4

Discussion of the task

Why the harvesting must be done in a strictly scheduled time? Why it is very important?

ROBORISE-IT!
ROBOTIC EDUCATION

0

5

Harvesting

ROBORISE-IT!
ROBOTIC EDUCATION

Most of the crops grown in the fields can't be leaved for a long time because the harvest will has simply spoiled.

0

6

Harvesting

ROBORISE-IT!
ROBOTIC EDUCATION

For the quick and quality harvesting the special combine harvesters has been designed. This is the complex machines that make many operations such as reaping, threshing, and winnowing.

0

7

Harvesting

ROBORISE-IT!
ROBOTIC EDUCATION

The operated by human harvester is great. But it is very rare practice to work around the clock. But robots may did this. The autonomous machines may work in 24/7 cycle without any troubles.

0

8

Robotised agriculture

ROBORISE-IT!
ROBOTIC EDUCATION

During the harvesting the many machines must to work together. For example, the tractors are used for the crops transportation. It allows the harvesters not to waste the time to the unloading.

0

9

Robotised agriculture

ROBORISE-IT!
ROBOTIC EDUCATION

By connecting all agro-machines to the network all processes may be adjusted to the obtaining the most effective work. Just imagine the dron that provides data about the field state to the all ground machines.

0

10

Harvesters

ROBORISE-IT!
ROBOTIC EDUCATION

Coordinated work of all the team members is very important. No one minute should not be wasted!

0

11

Let's summaries

ROBORISE-IT!
ROBOTIC EDUCATION

We must to create the robotised harvester that:

- May to work with other robots and with a human-operated machines.
- May to work around the clock.

0

12

Meet Harvester!

ROBORISE-IT!
ROBOTIC EDUCATION

The highly-effective autonomous combine harvester.

Harvester

0

13

Features

ROBORISE-IT!
ROBOTIC EDUCATION

The vertically mounted motor is used for movement and for drive the Reel. That's why Harvester must to move to operate. The Tilt sensor may be used for controlling the robot.

Find:

- smarthub
- motor
- sensor

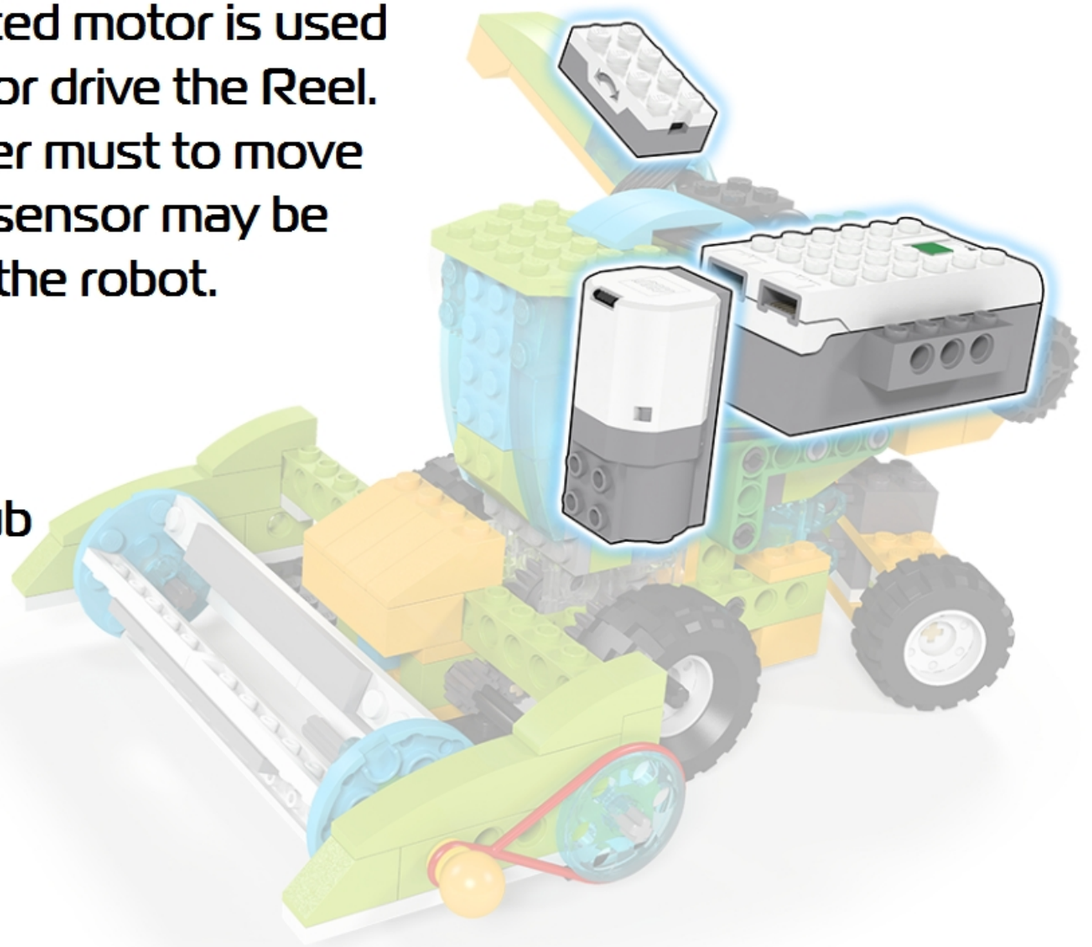

0

14

Features

Harvester has been builded on the articulated chassis. It increases the maneuverability of the robot. Also it has the adjustable Tilt sensor.

ROBORISE-IT!
ROBOTIC EDUCATION

0

15

Features

ROBORISE-IT!
ROBOTIC EDUCATION

The Worm gear used in the transmission makes the harvester 24 times slower. It allows more carefully harvest a variety of grain crops.

Find:

- Motor
- Worm gear
- Wheels

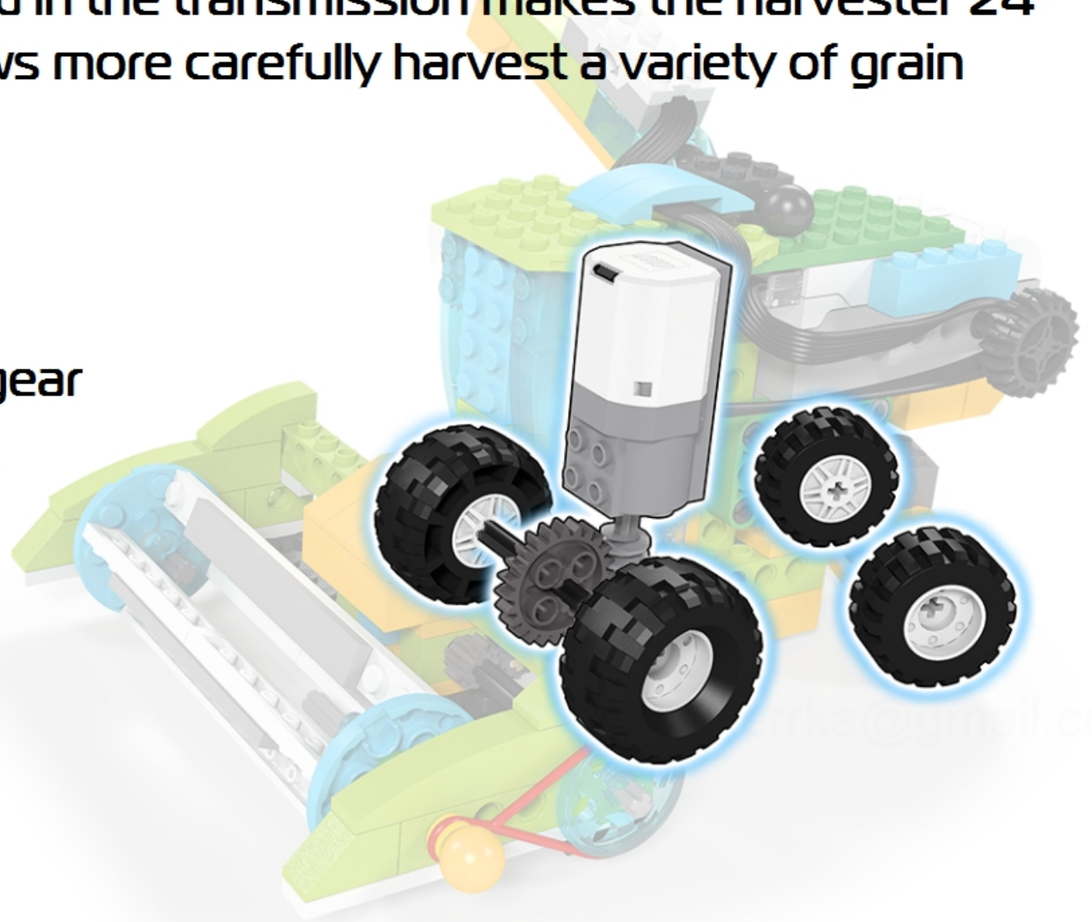

Features

ROBORISE-IT!
ROBOTIC EDUCATION

The Drive wheels are rotated in 24 times slower than the motor. As you may remember, the gear ratio for the LEGO worm gear is calculated as "number of gear tooth" divided "one".

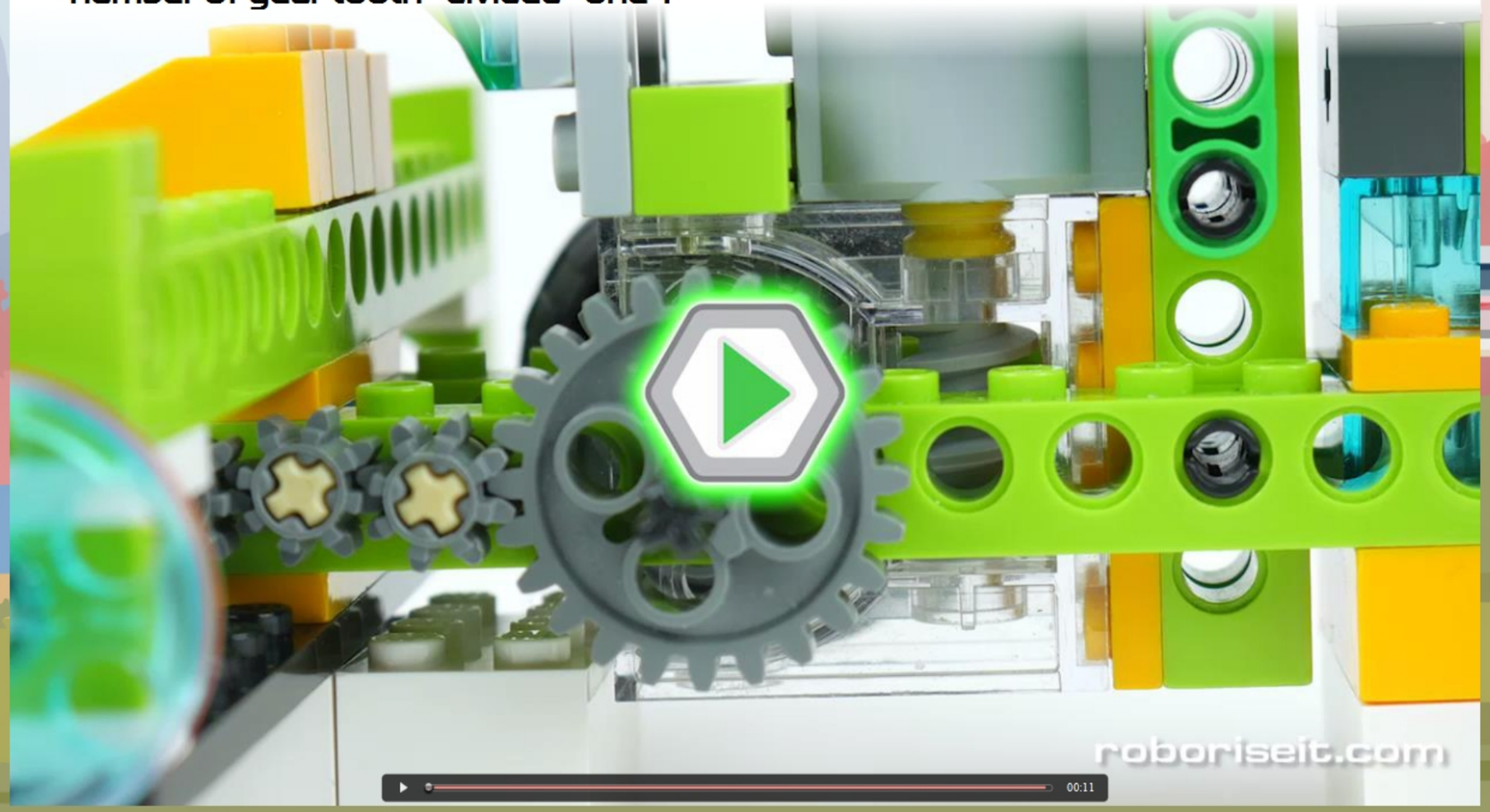

0

17

Features

The Reel rotates 9 times faster due to the spur gear and the belt drive using.

Find:

- Motor
- Transmission
- Reel

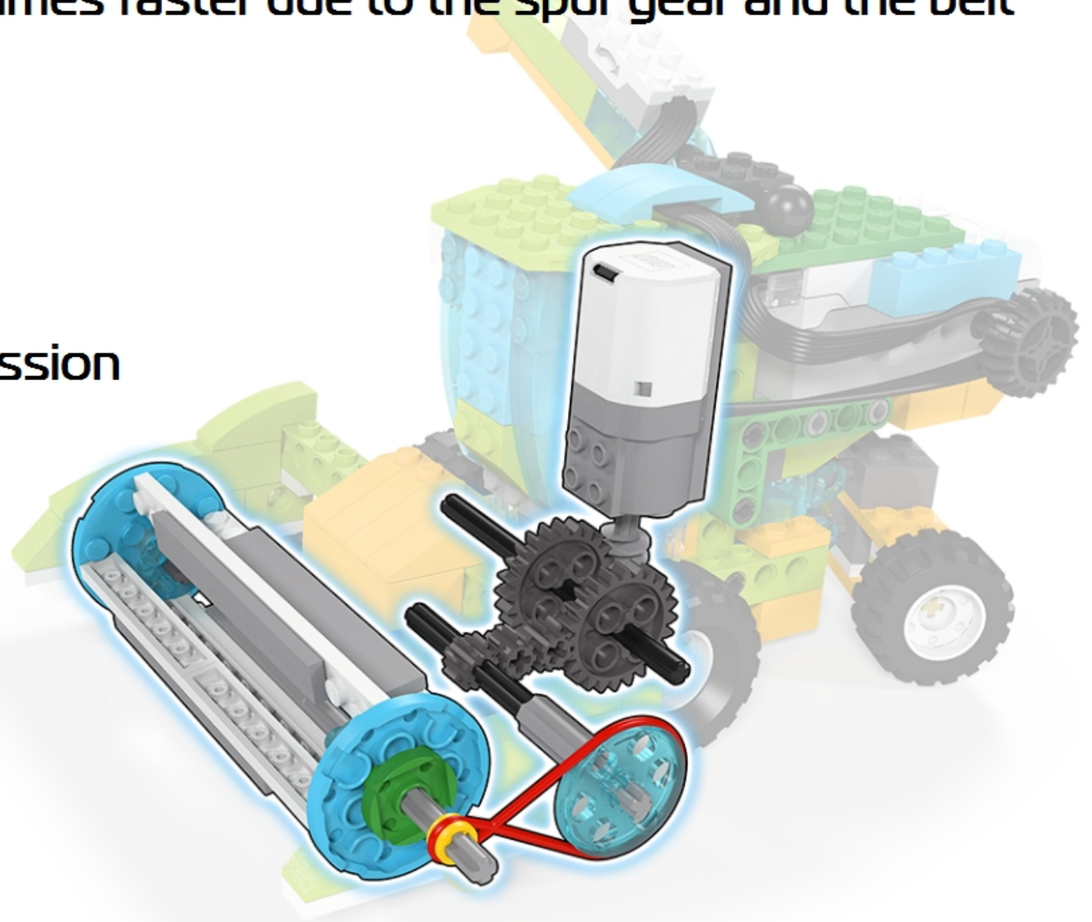

ROBORISE-IT!
ROBOTIC EDUCATION

0

18

Features

The Gear train that drive the Reel includes Worm gear, two idler gears that transmit rotation among distant shafts, and Belt Drive.

ROBORISE-IT!
ROBOTIC EDUCATION

0

19

Build the robot!

ROBORISE-IT!
ROBOTIC EDUCATION

0

20

ROBORISE-IT!
ROBOTIC EDUCATION

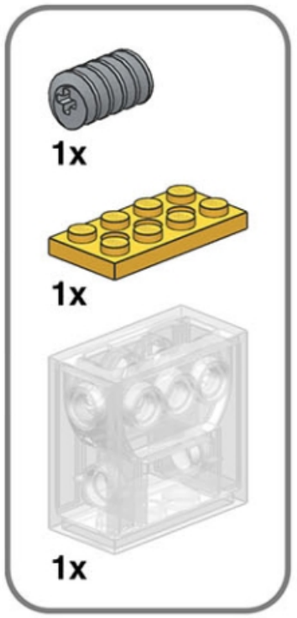

1

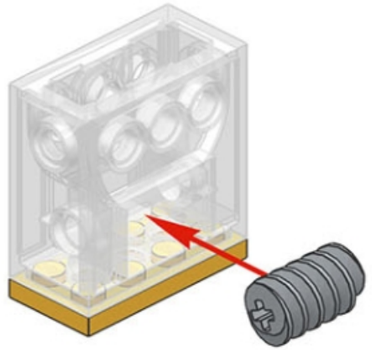

nerka@gmail.com

Enhanced version

ROBORISE-IT!
ROBOTIC EDUCATION

Add the cabin, unloading auger and some visual improvements to your robot!

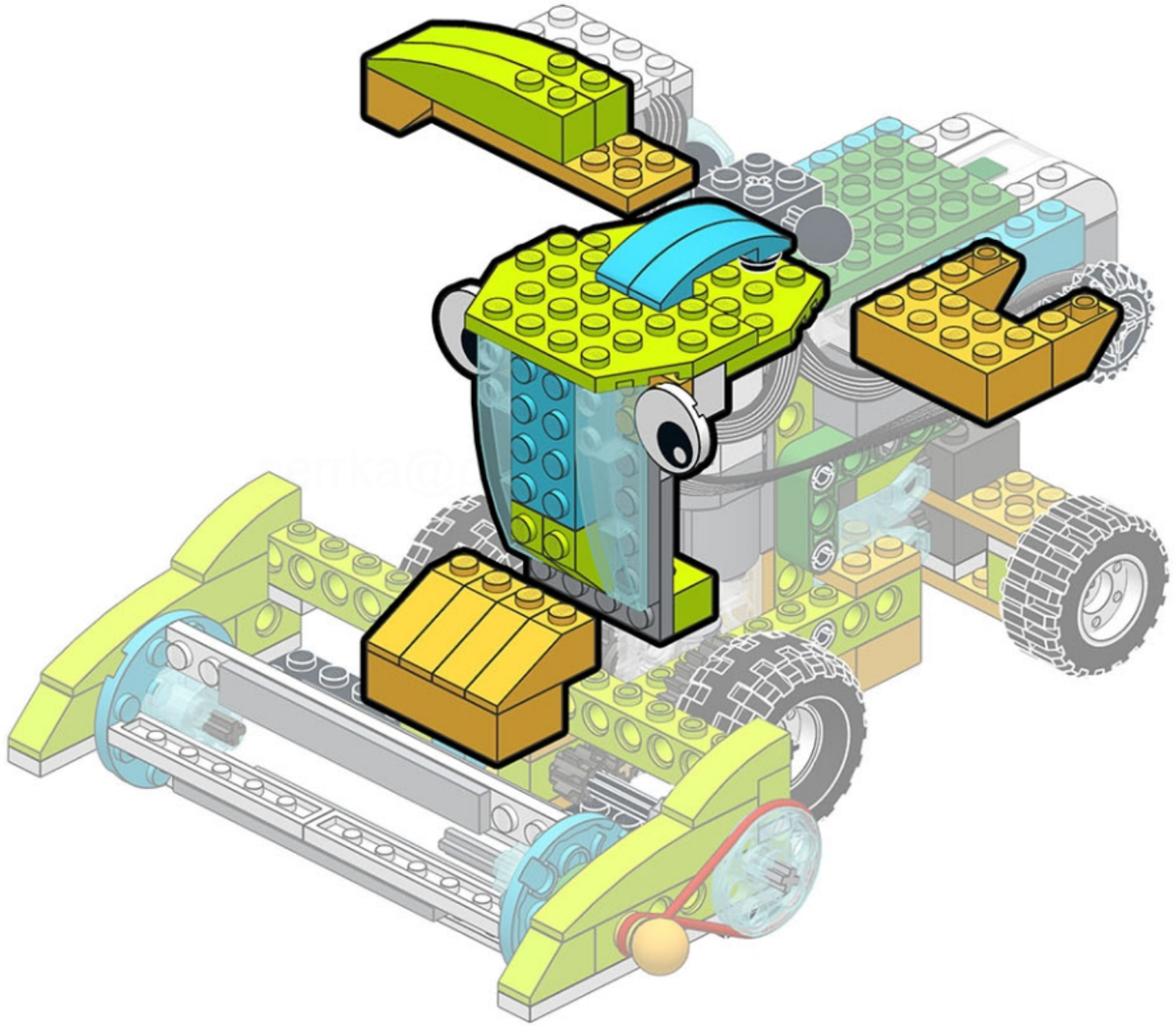

1/13

0

74

Check it out!

ROBORISE-IT!
ROBOTIC EDUCATION

Avoid any friction between the cables while robot is moving.

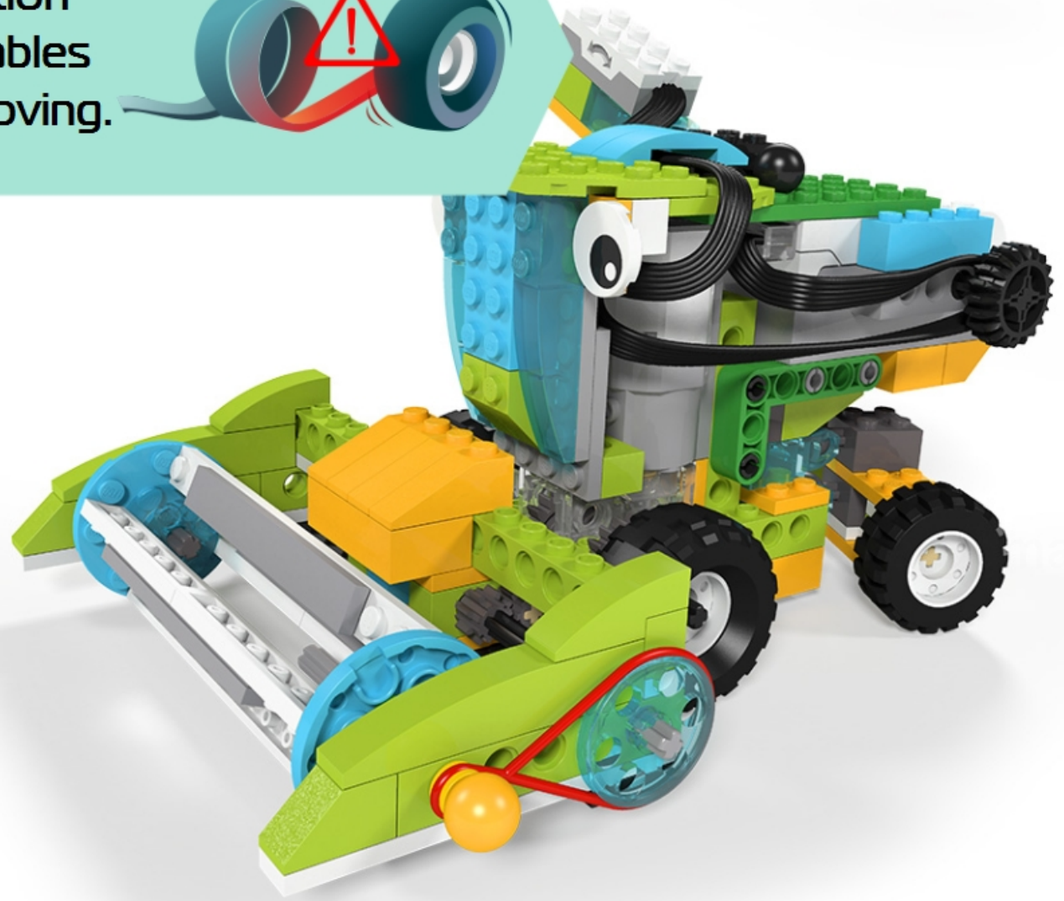

0

87

TASK

ROBORISE-IT!
ROBOTIC EDUCATION

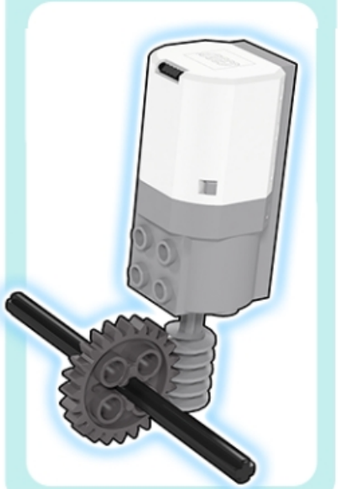

Place parts of the robot in the right places.

erka@gmail.com

0

88

Task

ROBORISE-IT!
ROBOTIC EDUCATION

Prepare the farm field for harvesting the grain.

0

89

Task 1

ROBORISE-IT!
ROBOTIC EDUCATION

Check the mechanism. The Harvester must drive slowly while the reel rotates fast.

0

90

Discuss the result!

Why the Reel rotates much faster than the Drive wheels?

Task 2

ROBORISE-IT!
ROBOTIC EDUCATION

Let's calculate expected differences in the rotation speeds.
The first gear includes two idlers, input 24-tooth gear and output 8-tooth gear. It gives the increasing of the rotation speed in 3 times. Then speed has been incresed one more time in threefold. Multiply this values to know the total increasin of the rotation speed!

	Counted	Calculated
Number of the wheel rotations	1	1
Number of the reel rotations		

nerrka@gmail.com

Task 3

ROBORISE-IT!
ROBOTIC EDUCATION

Place the markers on the wheel axle and on the Reel axle. Program the duration of the rotation that will leads to the one full rotation of the wheel. Count the number of the rotation of the Reel during one rotation of the wheel.

0

93

ROBORISE-IT!
ROBOTIC EDUCATION

1x

65

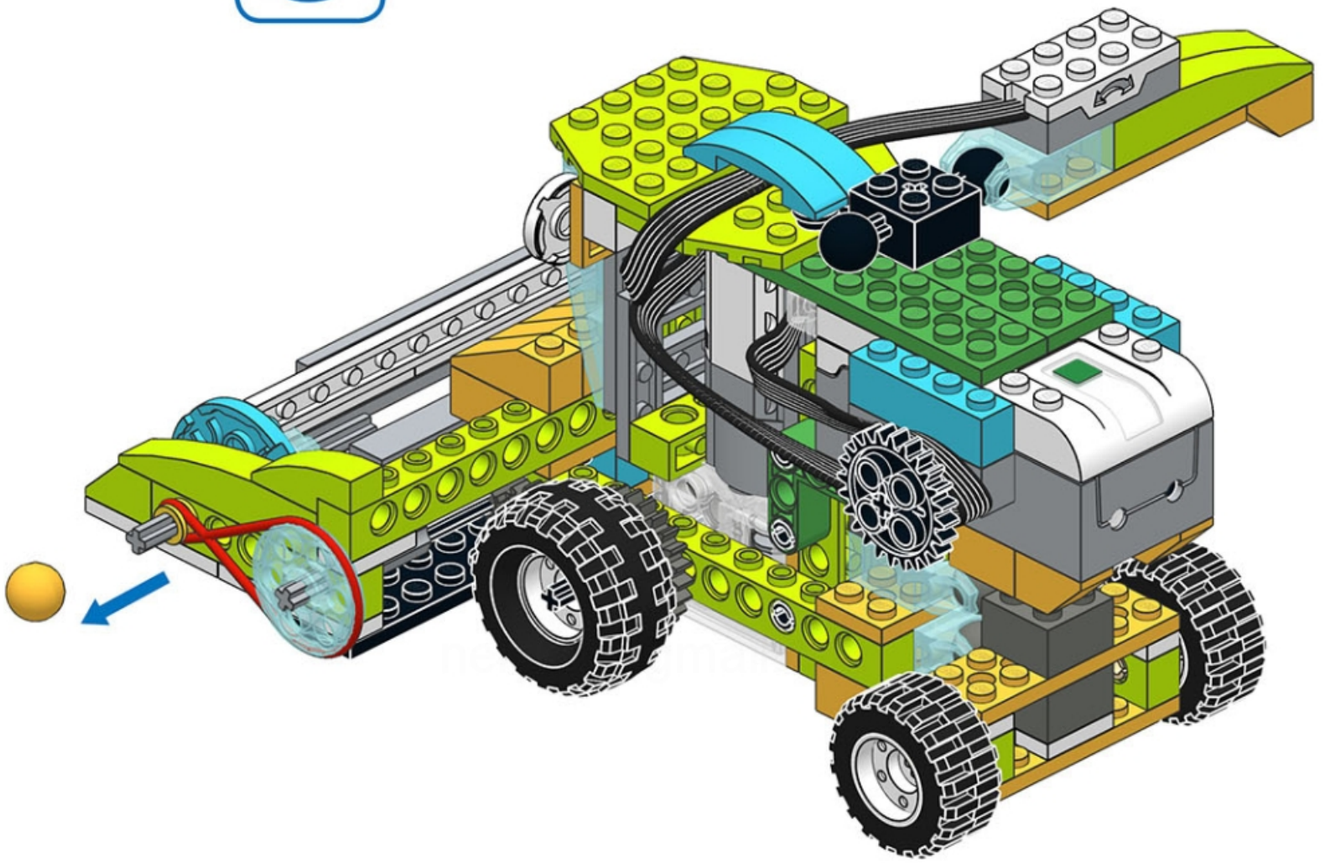

1/4

0

94

Task 3

ROBORISE-IT!
ROBOTIC EDUCATION

Fill the marked cell of the table:

	Counted	Calculated
Number of the wheel rotations	1	1
Number of the reel rotations		

Discuss the result!

Compare counted number of the rotations with your friends. Why calculated and counted values are differ?

ROBORISE-IT!
ROBOTIC EDUCATION

Belt drive

ROBORISE-IT!
ROBOTIC EDUCATION

The one of the main features of the belt drive in the design of the LEGO robots is a possibility to slip. This allows to build the transmissions that not stuck the motor. But the other part of this feature is that the output shaft may rotates not as you expect.

0

100

Task 4

ROBORISE-IT!
ROBOTIC EDUCATION

Program the manual control of the Robot's movements by Tilt sensor.

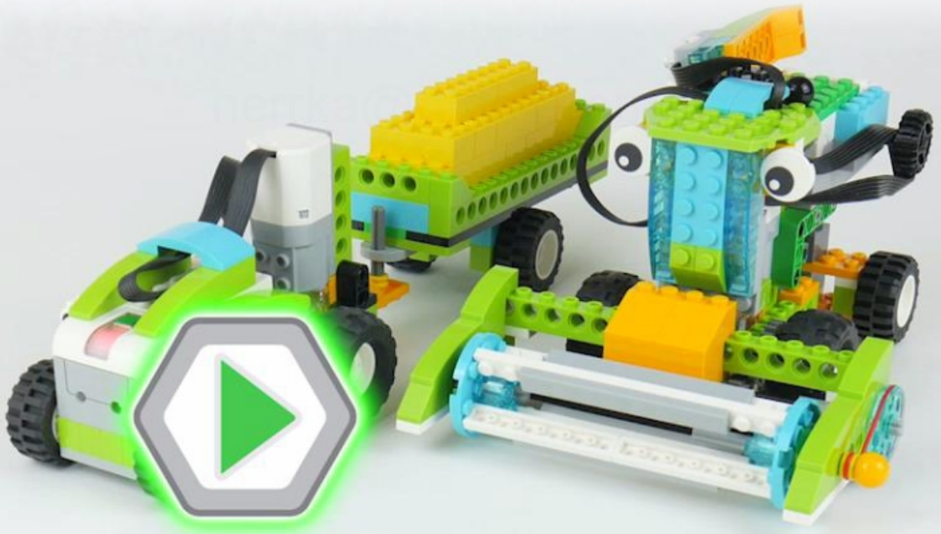

roboriseit.com

00:25

0

101

Task 4. Program

Program may be written as follows.
Note, the motor's speed is setted up at the beginning of the program.

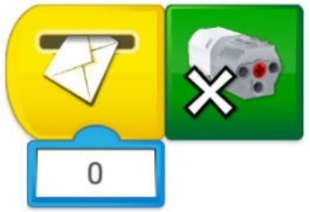

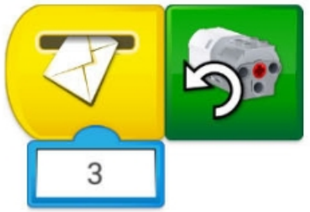

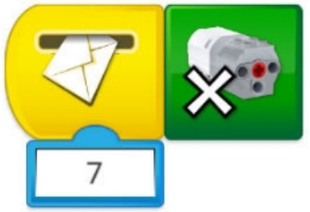

Task 5

ROBORISE-IT!
ROBOTIC EDUCATION

Add the revers to the program and test it!

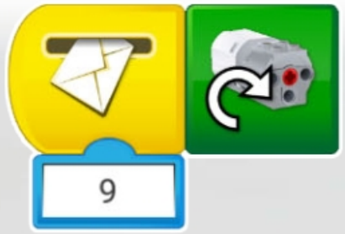

roboriseit.com

00:37

0

103

Task 6*

ROBORISE-IT!
ROBOTIC EDUCATION

Add the color indication of the robot's operating modes.

nerrka@gmail.com

Discuss!

- How automated field robots may increase the productivity of the farms?
- How to make the harvesting uninterrupted?
- Why the calculated and real rotation speeds of reel are differ?

ROBORISE-IT!
ROBOTIC EDUCATION

Your achievements

ROBORISE-IT!
ROBOTIC EDUCATION

Total count: 0

1

2

3

4

0

106

Mission complete!

ROBORISE-IT!
ROBOTIC EDUCATION

0

107