# Build the robot!

ROBORISE-IT!
ROBOTIC EDUCATION

0

27

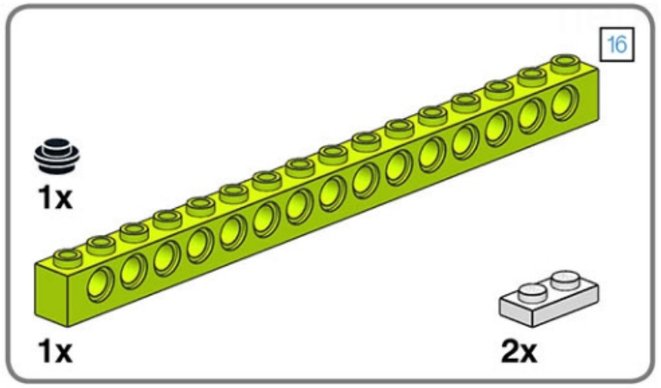


**1**

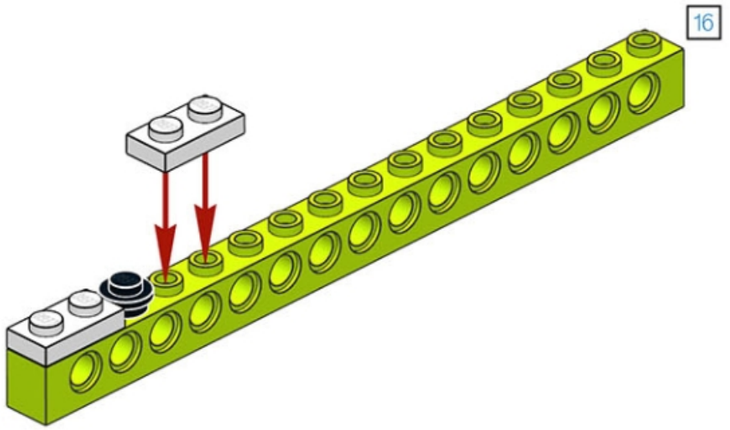


ROBORISE-IT!
ROBOTIC EDUCATION

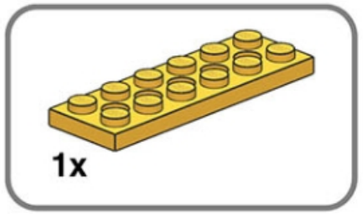


# 2

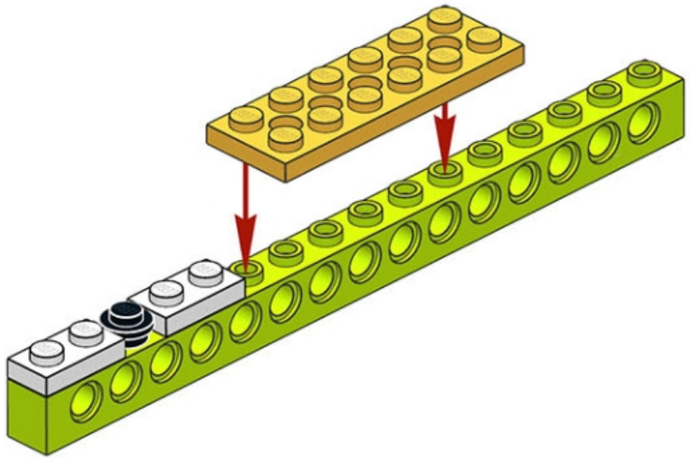

nerrka@gmail.com

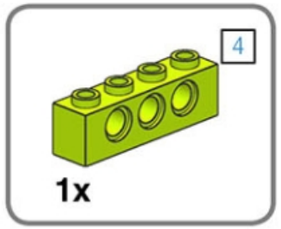


# 3

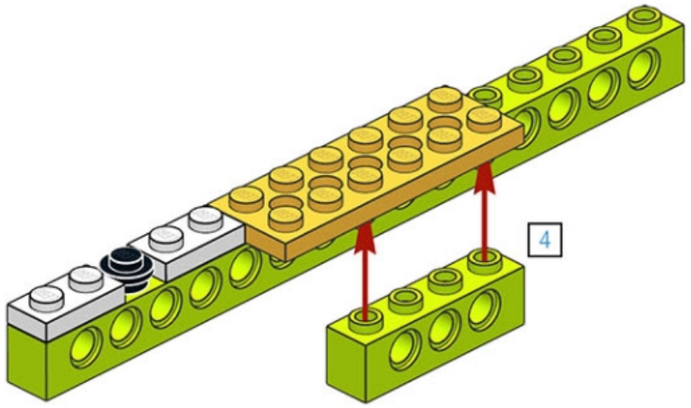


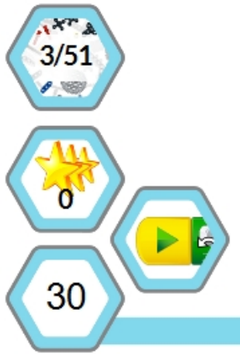


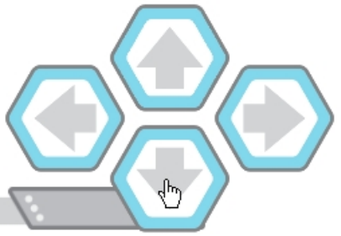

ROBORISE-IT!
ROBOTIC EDUCATION

# 4

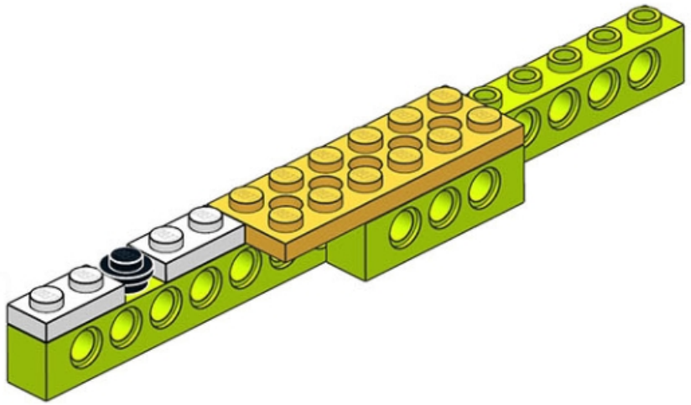

nerrka@gmail.com

4/51

0

31

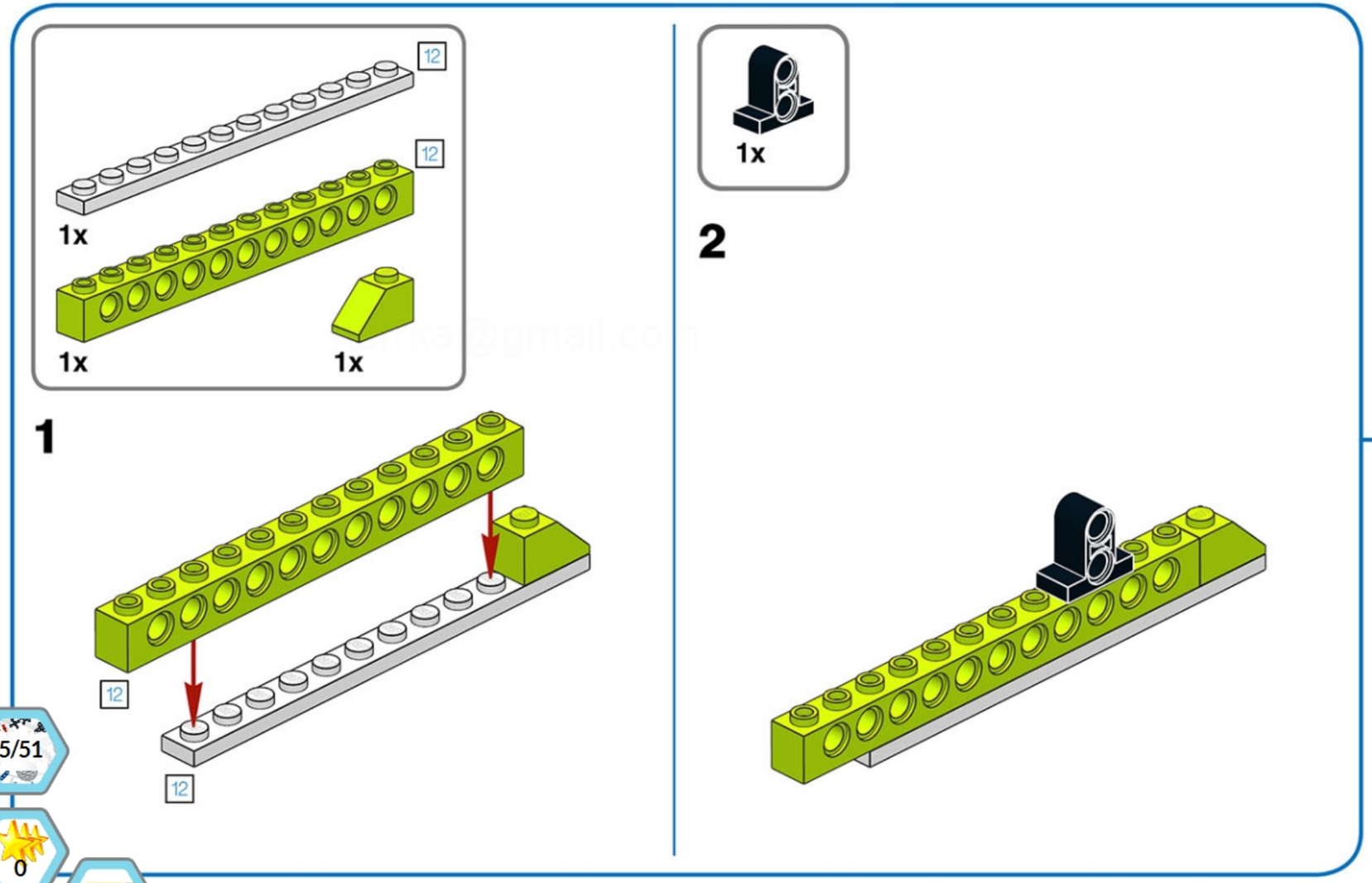
12
12
1x
1x
1x
1
12
12
1x
2

ROBORISE-IT!
ROBOTIC EDUCATION

# 6

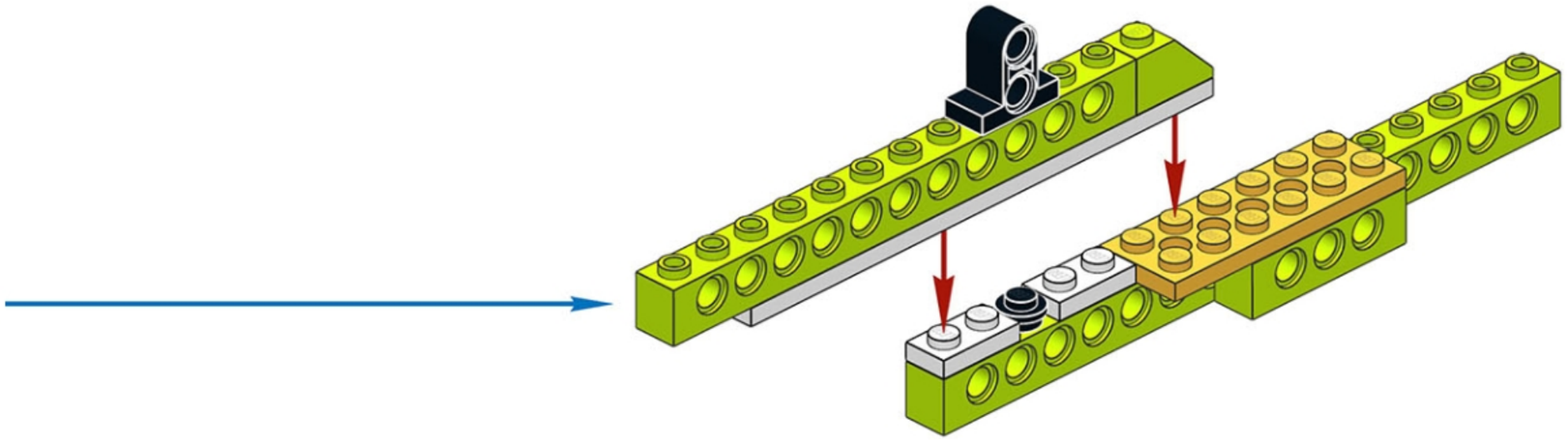

6/51

0

33

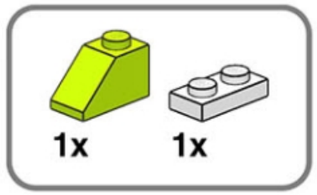


# 7

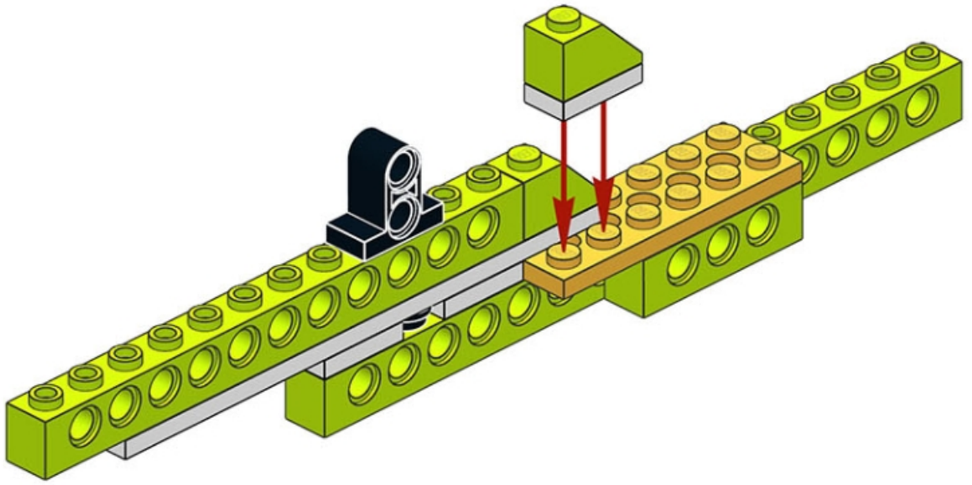

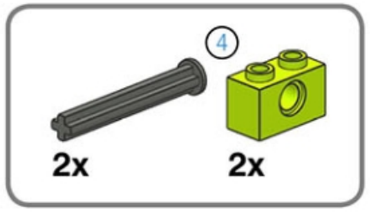


# 8

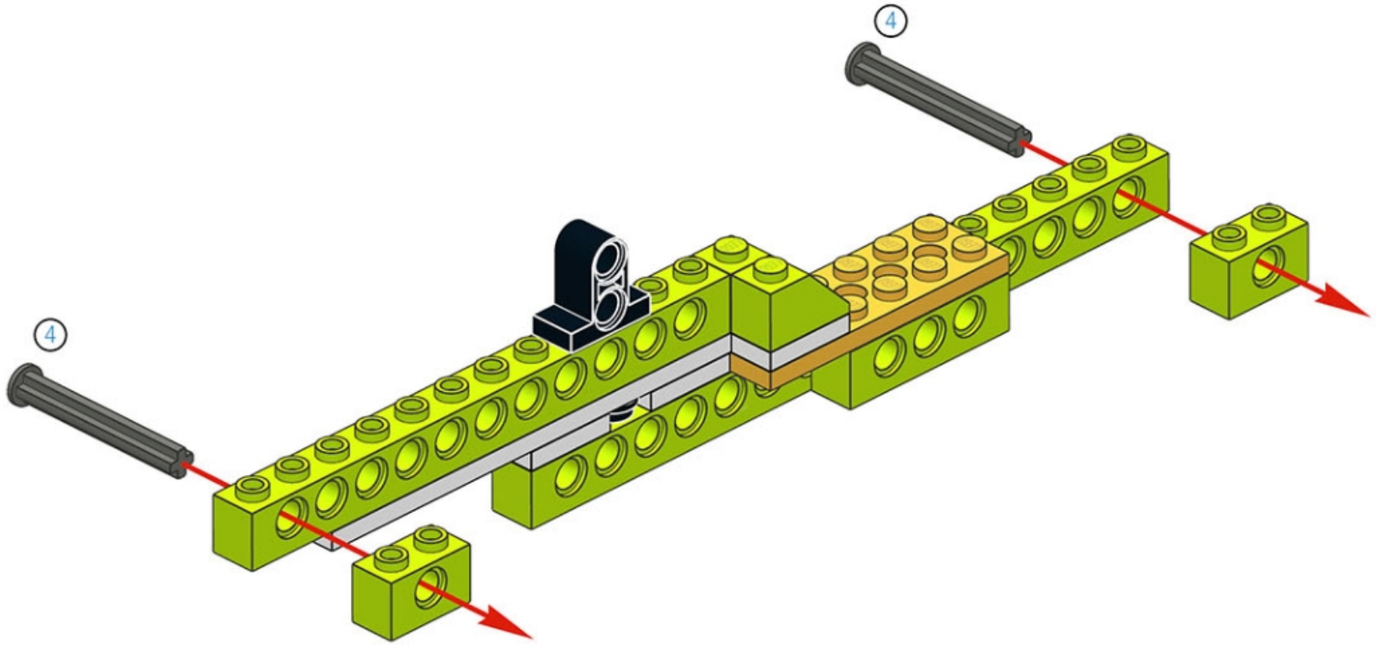


ROBORISE-IT!
ROBOTIC EDUCATION

nerka@gmail.com

ROBORISE-IT!
ROBOTIC EDUCATION

2x

9

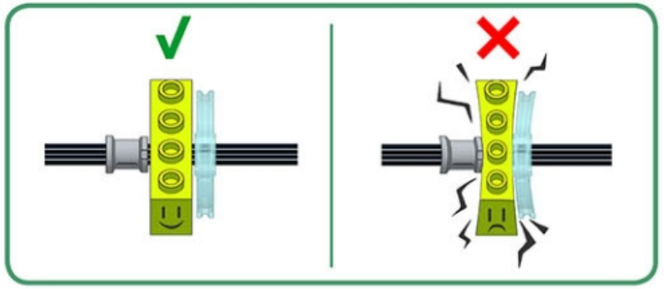

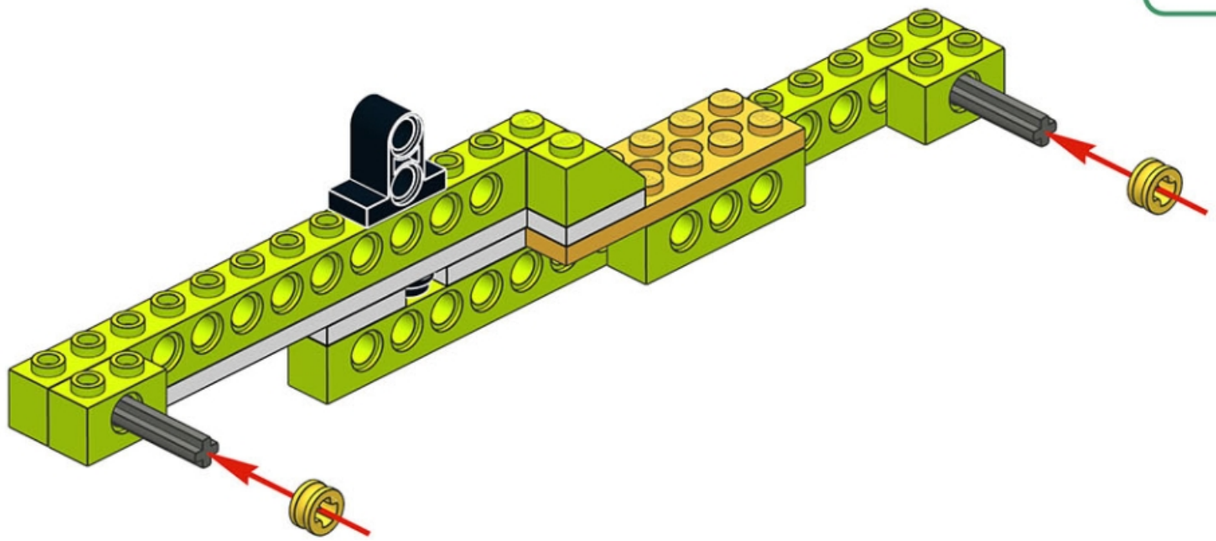

9/51

0

36

ROBORISE-IT!
ROBOTIC EDUCATION

2x

# 10

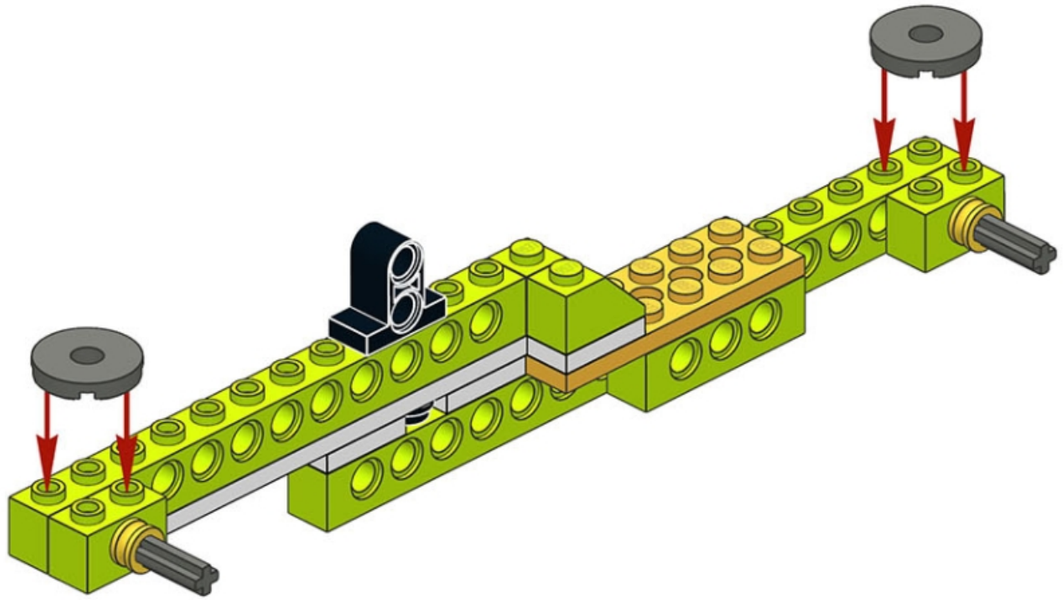

10/51

0

37

# 11

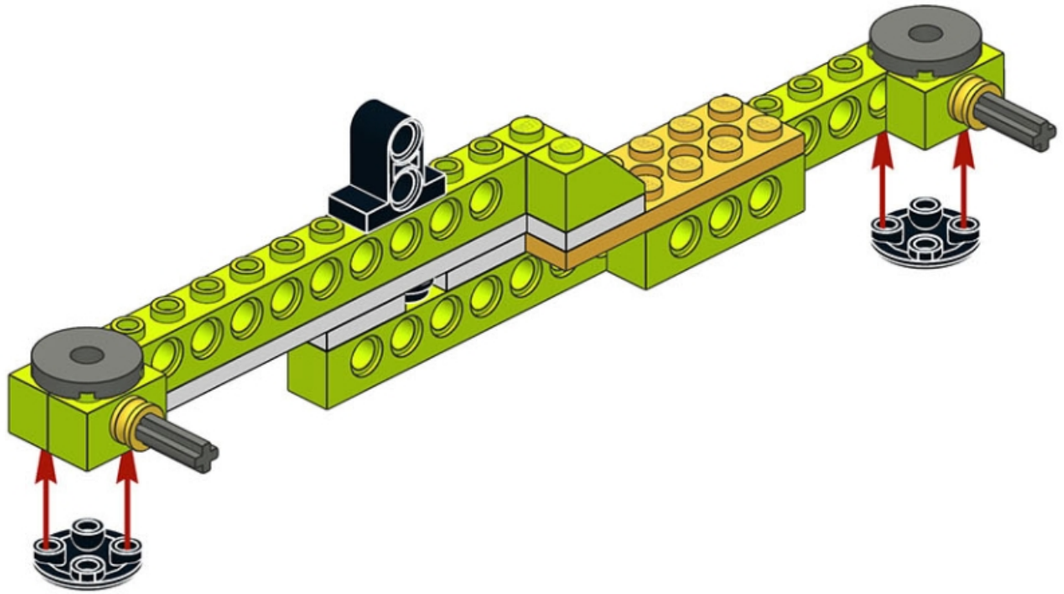

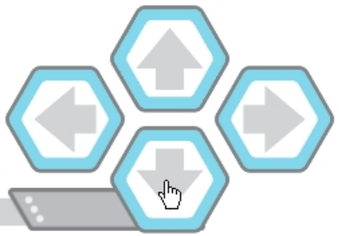

ROBORISE-IT!
ROBOTIC EDUCATION

3x

12

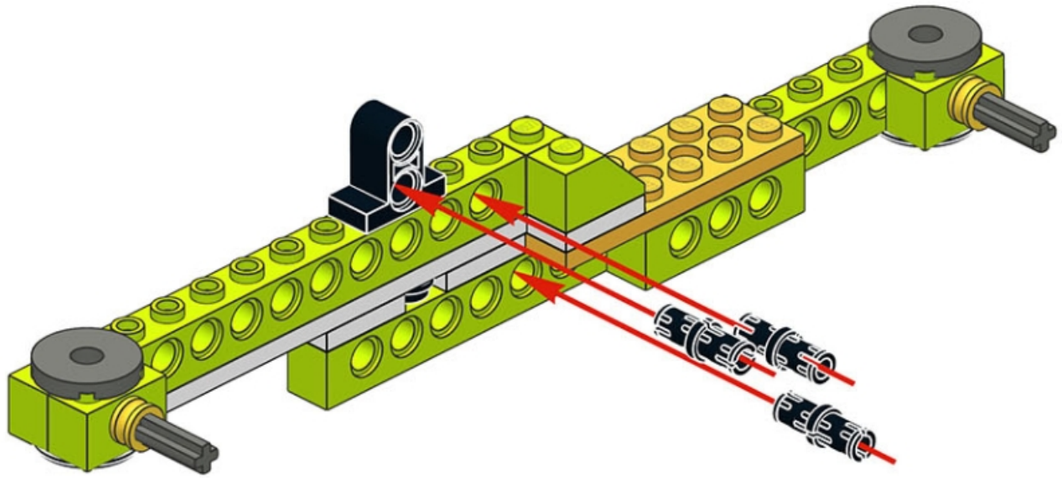

12/51

0

39

ROBORISE-IT!
ROBOTIC EDUCATION

# 13

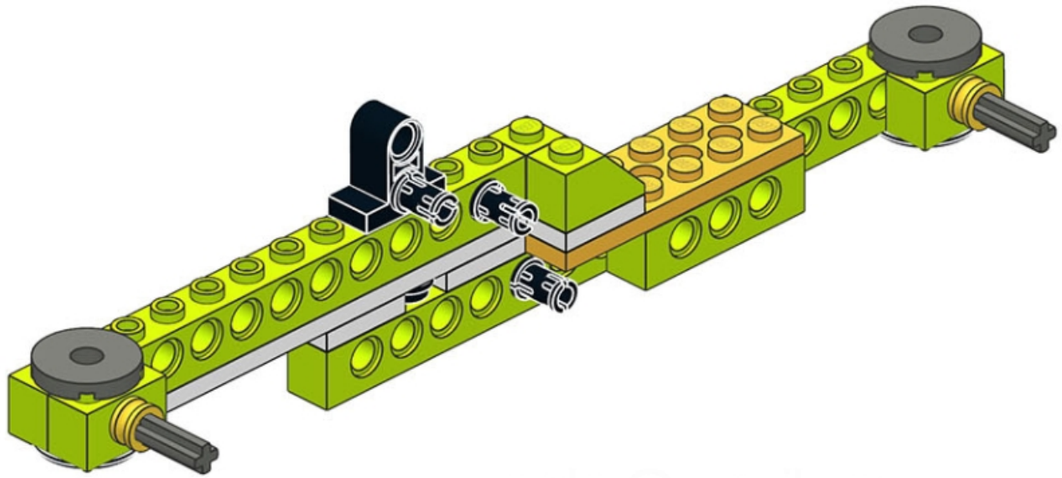

nerrka@gmail.com

13/51

0

40

nerka@gmail.com

ROBORISE-IT!
ROBOTIC EDUCATION

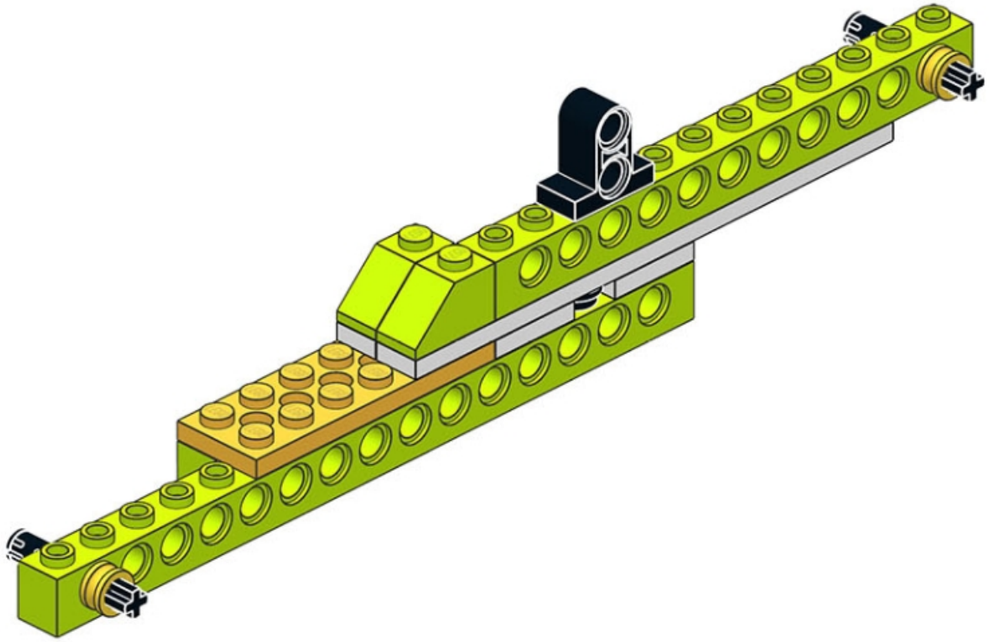

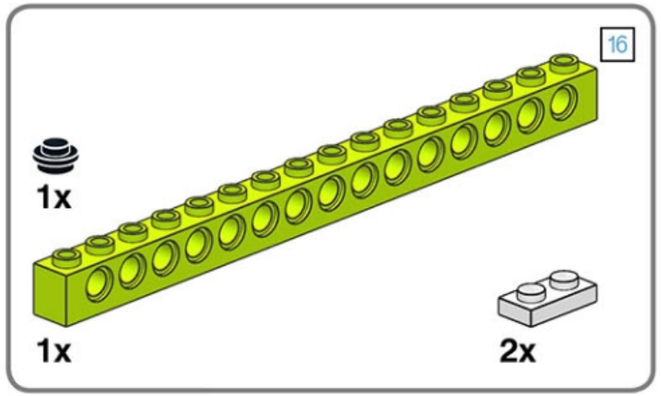


# 14

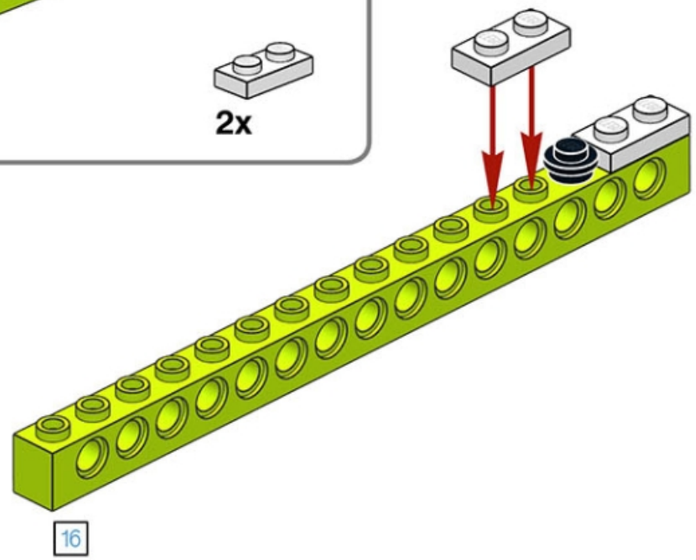


14/51

0

41

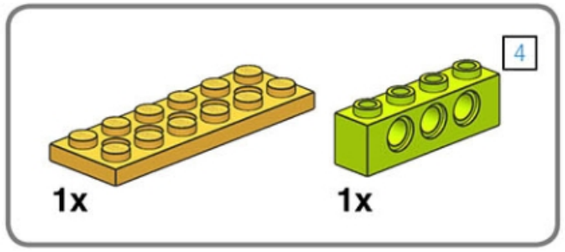


# 15

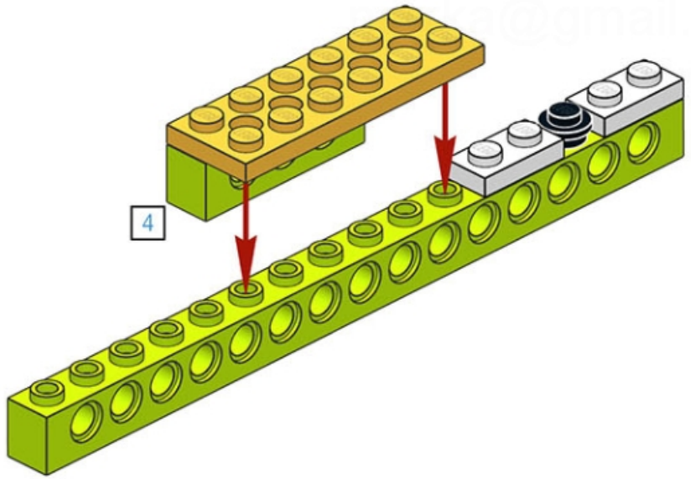

ROBORISE-IT!
ROBOTIC EDUCATION

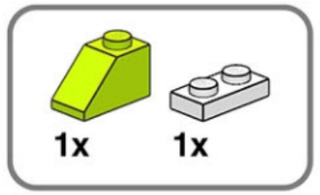


# 16

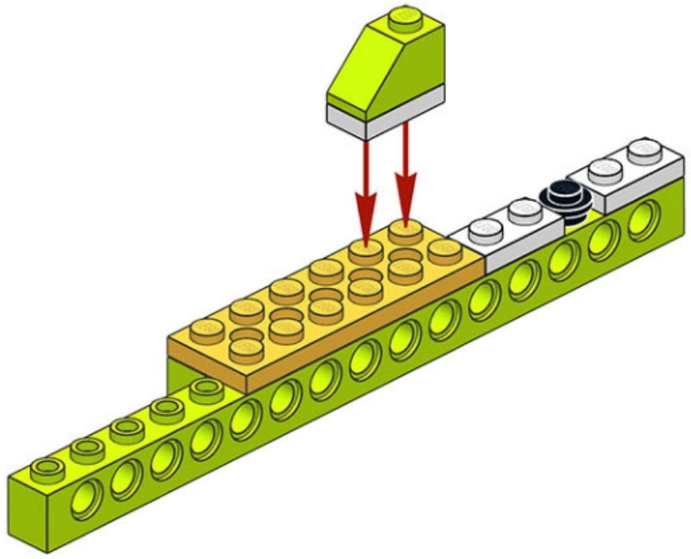

16/51

0

43

ROBORISE-IT!
ROBOTIC EDUCATION

# 17

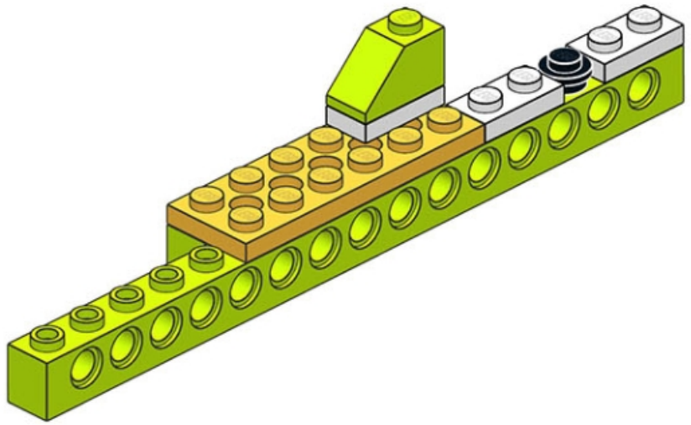

17/51

0

44

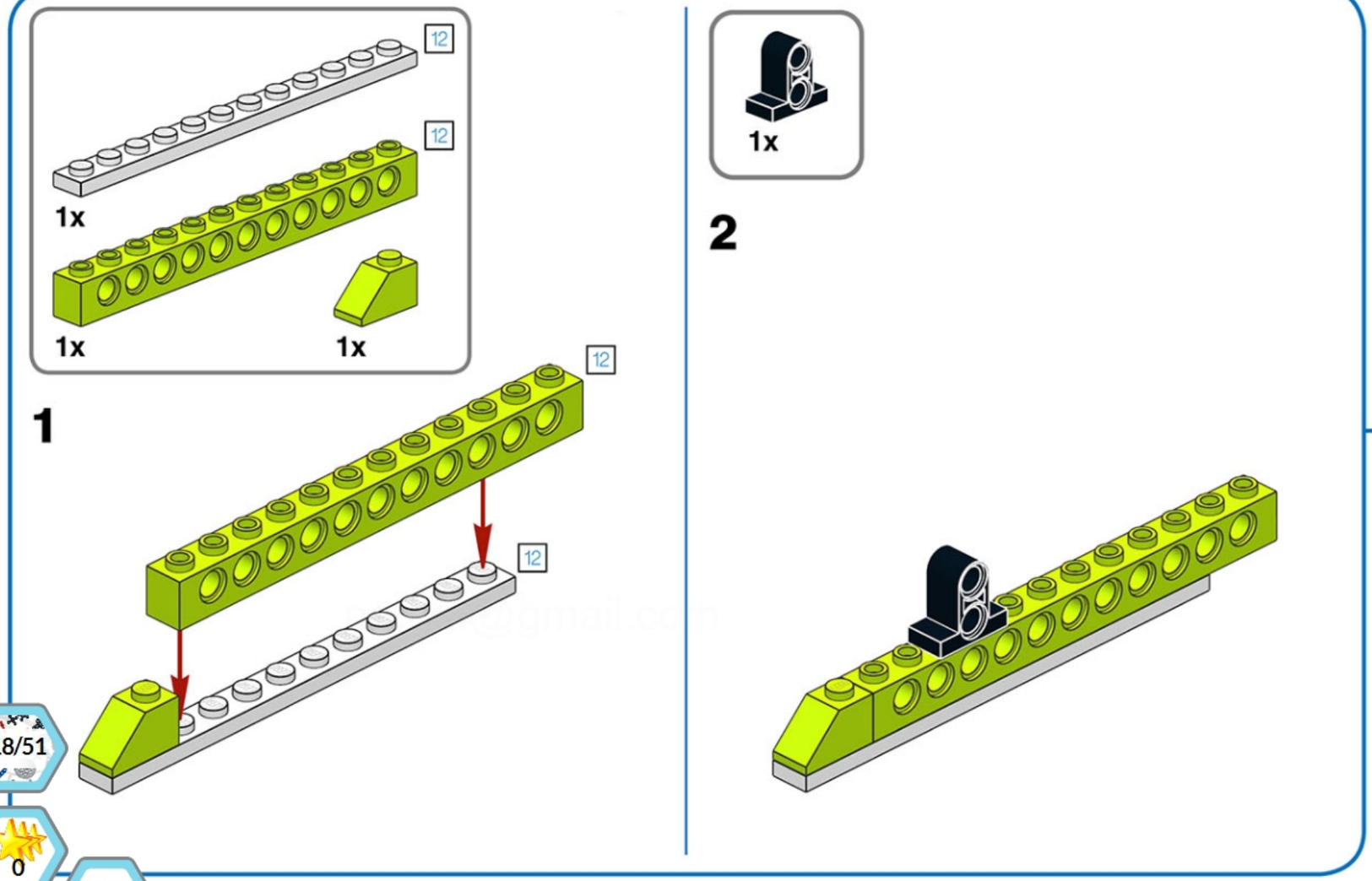


ROBORISE-IT!
ROBOTIC EDUCATION

18/51

0

45

ROBORISE-IT!
ROBOTIC EDUCATION

# 19

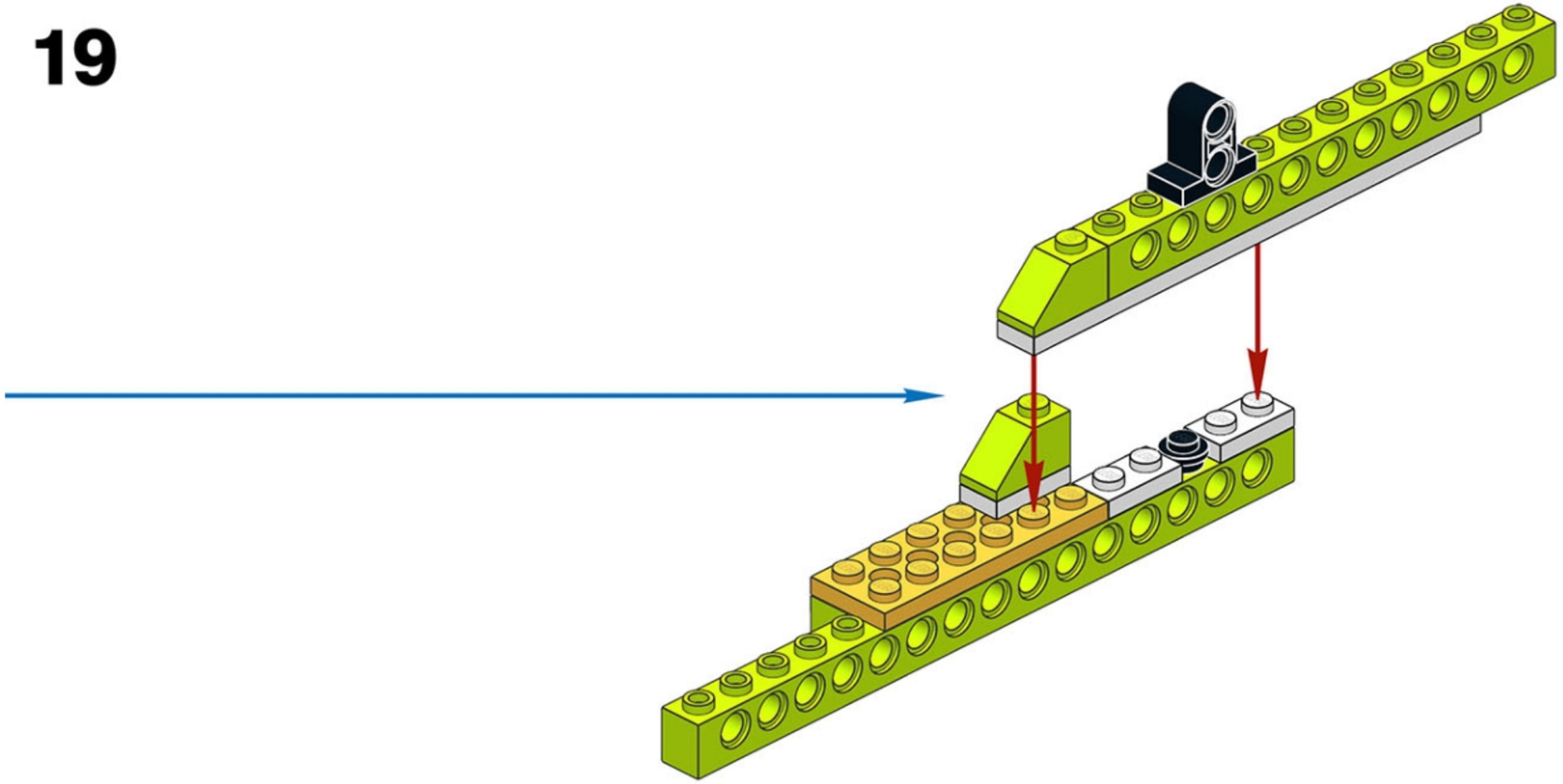

19/51

0

46

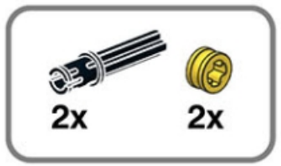


# 20

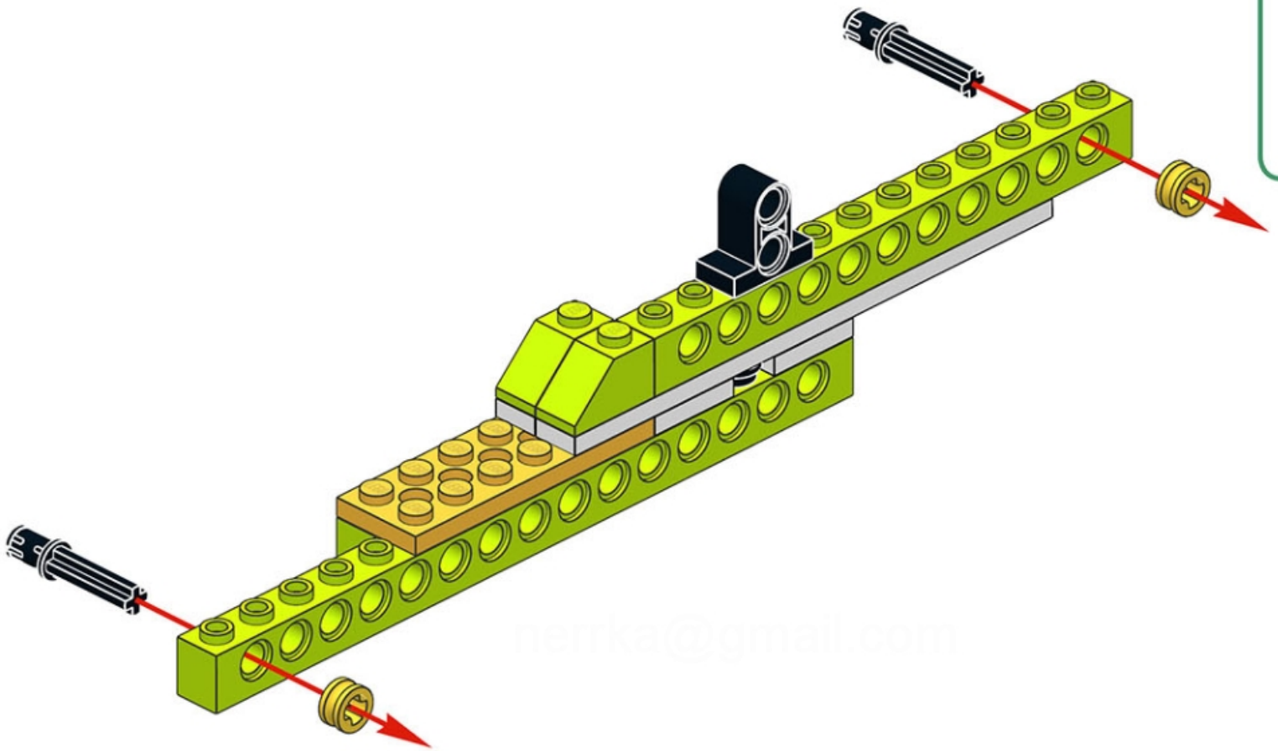

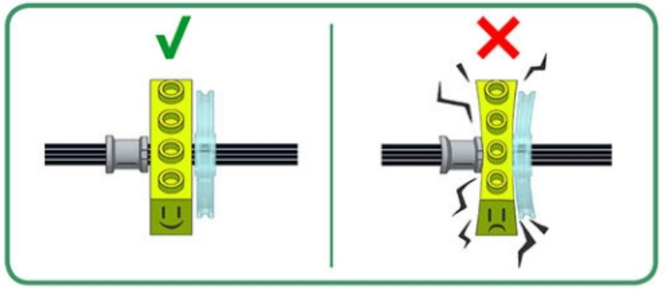

ROBORISE-IT!
ROBOTIC EDUCATION

nerka@gmail.com

ROBORISE-IT!
ROBOTIC EDUCATION

# 21

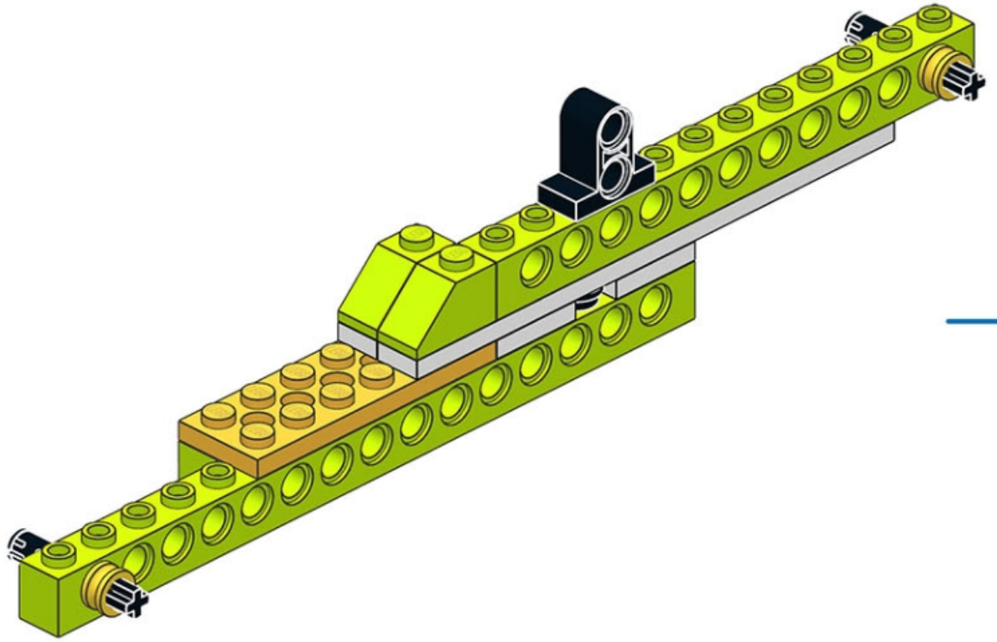

22

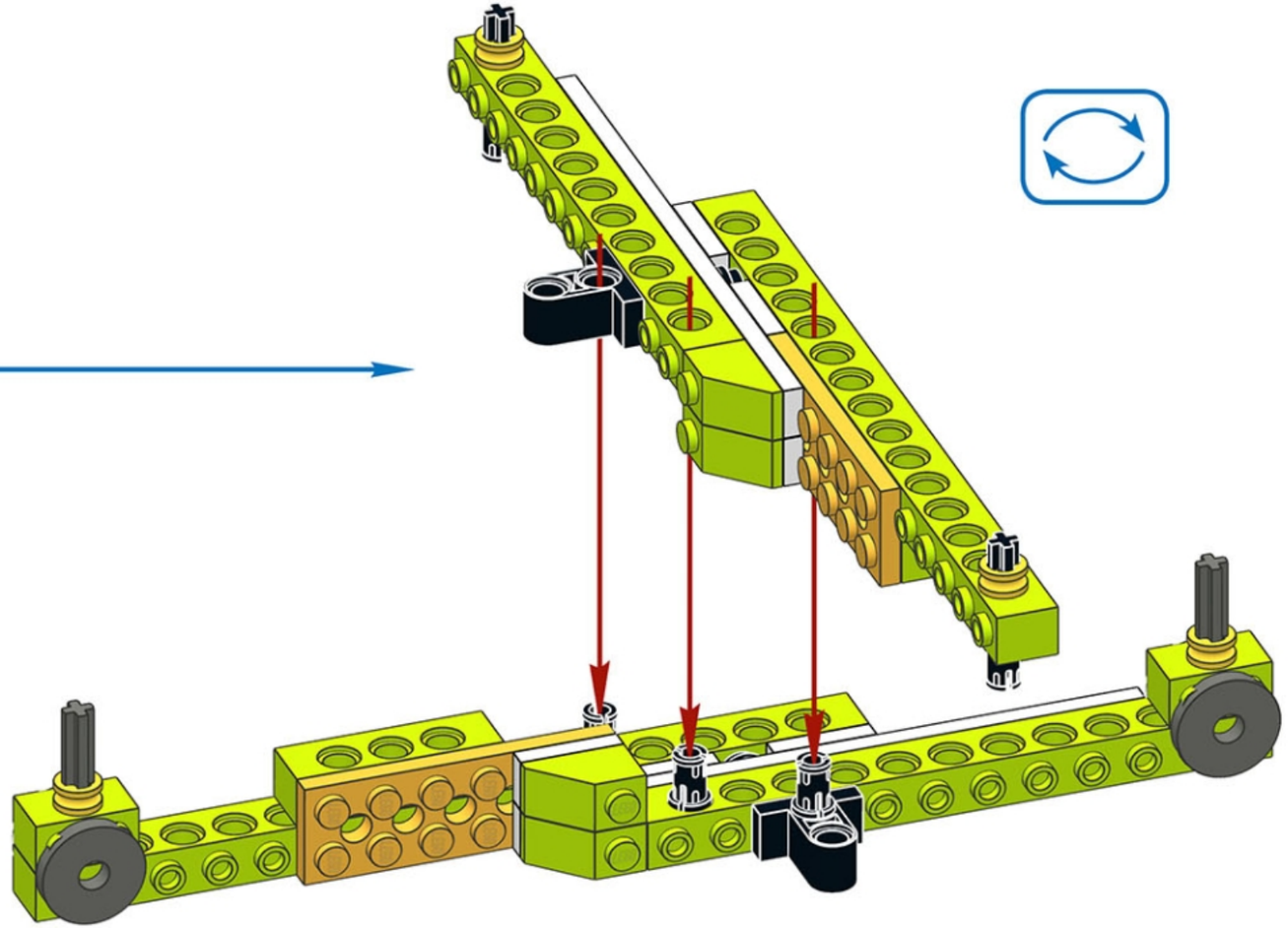

ROBORISE-IT!
ROBOTIC EDUCATION

22/51

0

49

ROBORISE-IT!
ROBOTIC EDUCATION

# 23

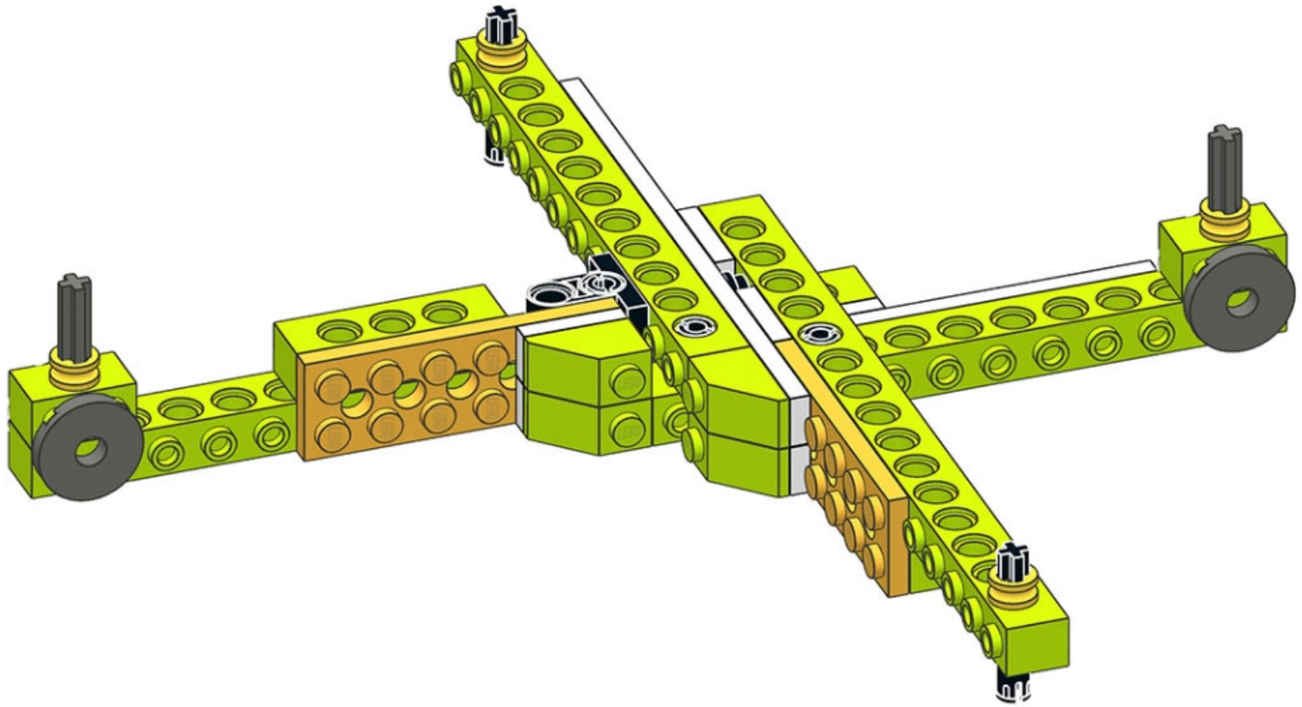

23/51

0

50

ROBORISE-IT!
ROBOTIC EDUCATION

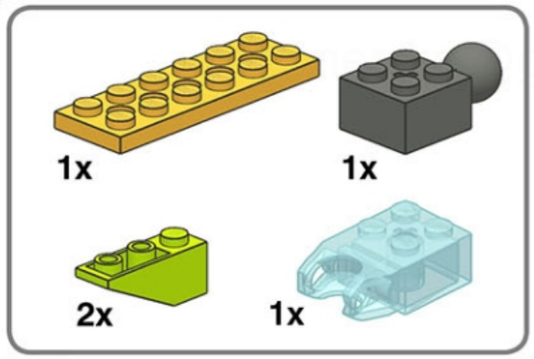


1

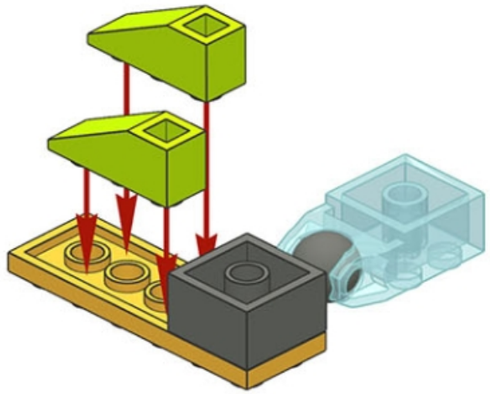

2

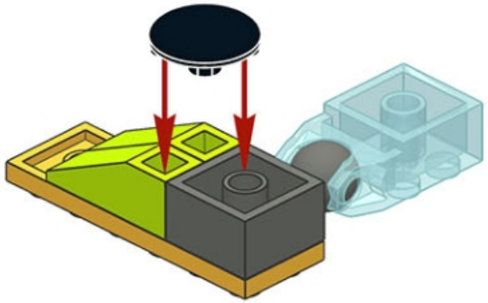

3

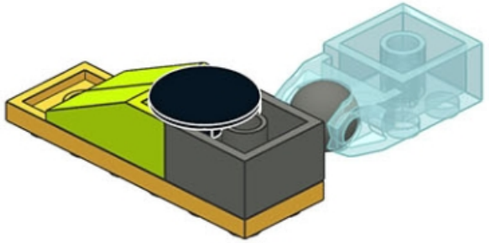

ROBORISE-IT!
ROBOTIC EDUCATION

# 25

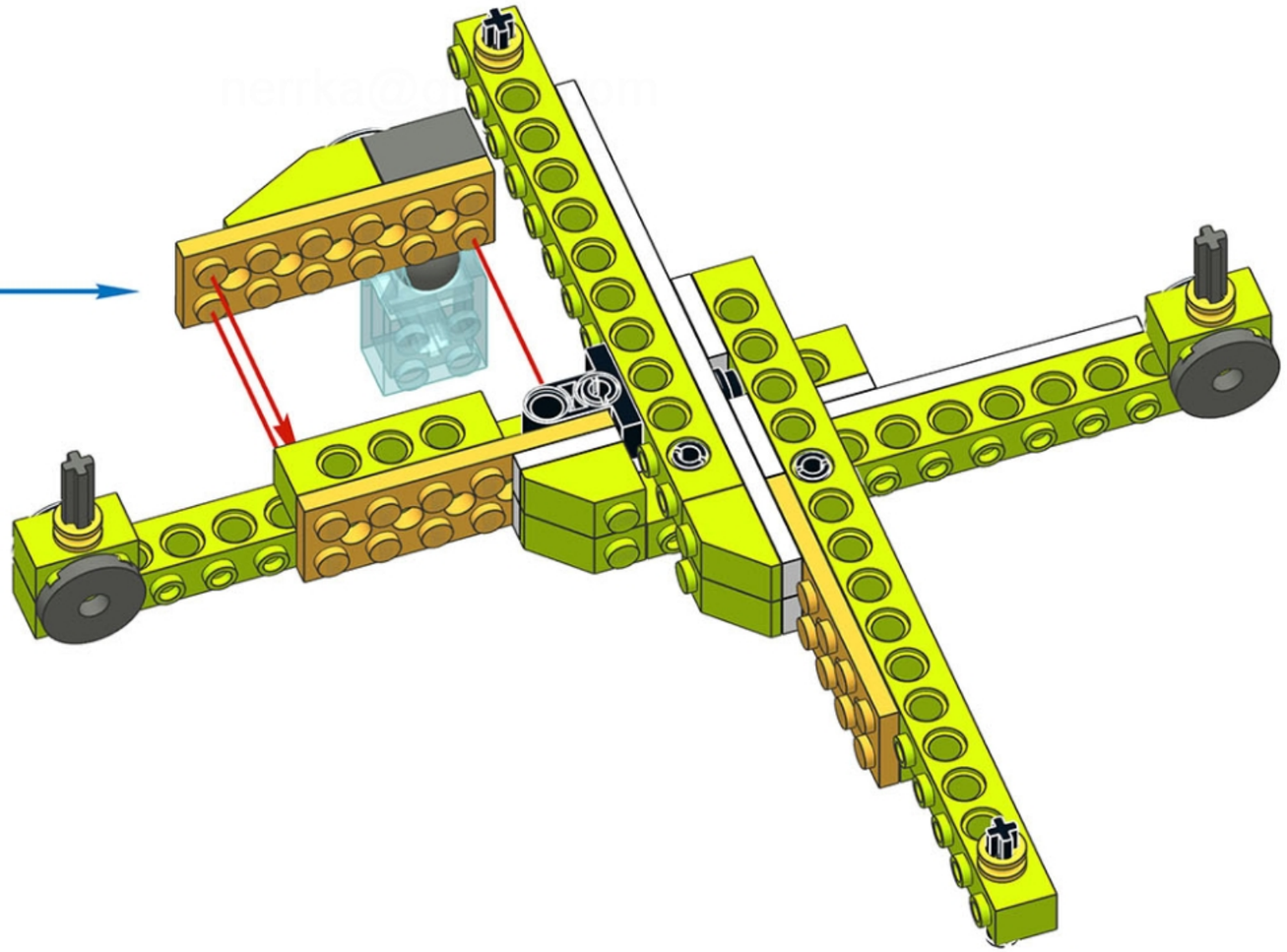

25/51

0

52

ROBORISE-IT!
ROBOTIC EDUCATION

# 26

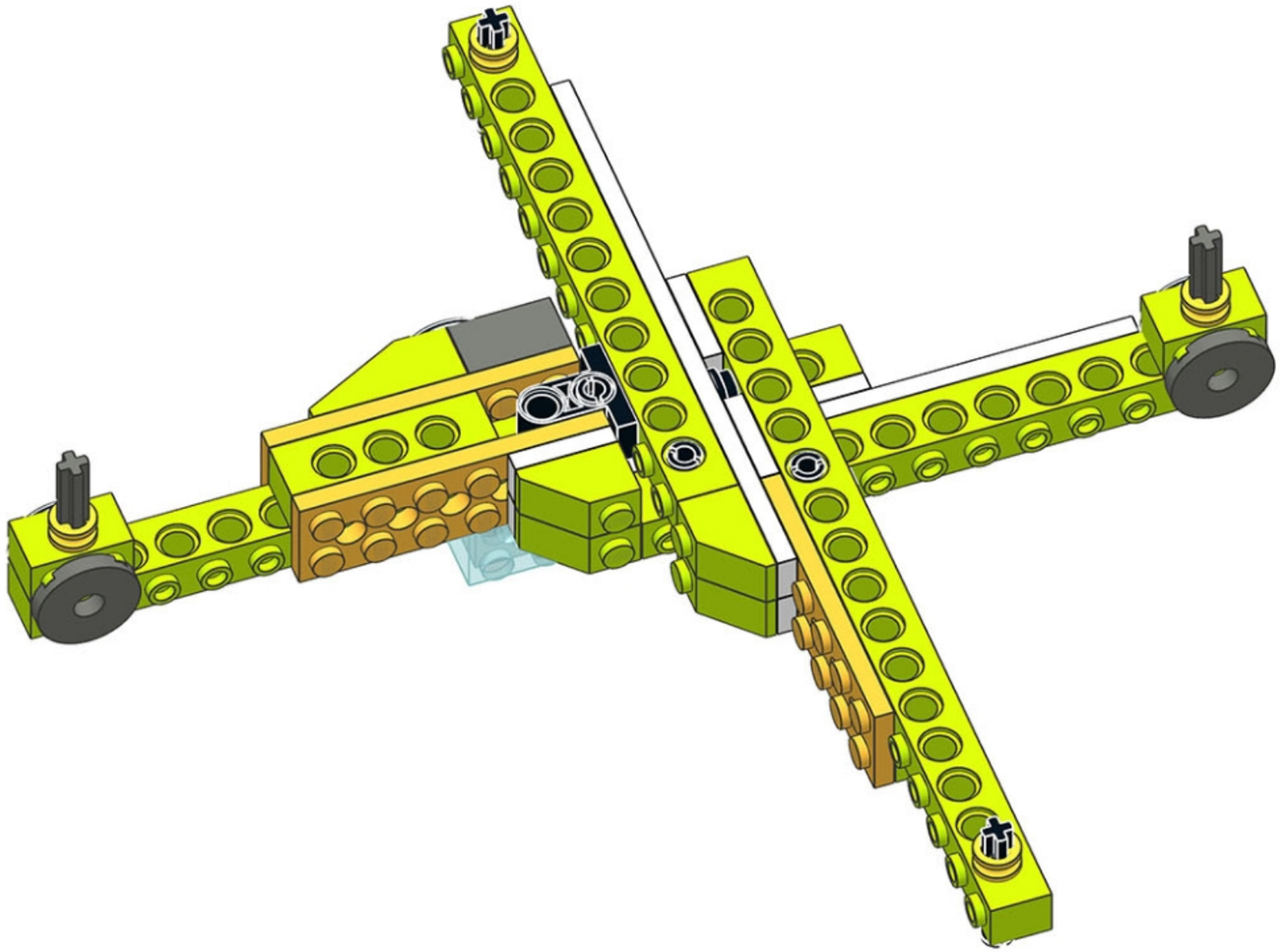

26/51

0

53

nerka@gmail.com

ROBORISE-IT!
ROBOTIC EDUCATION

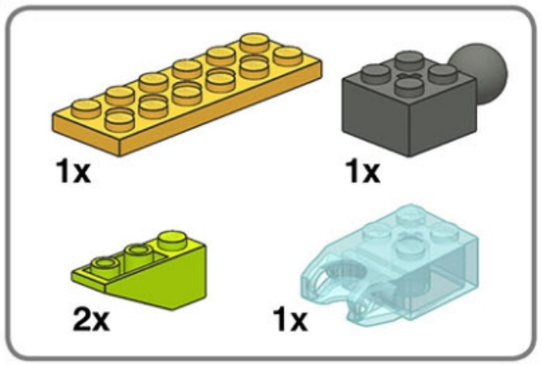


1

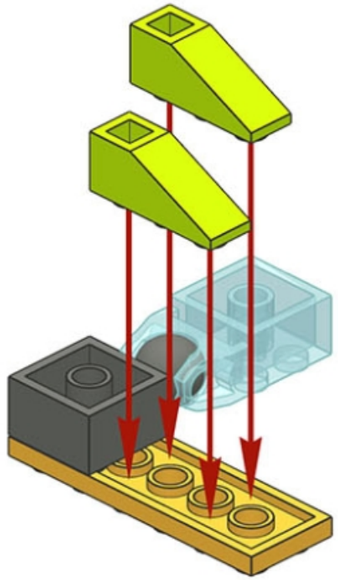

2

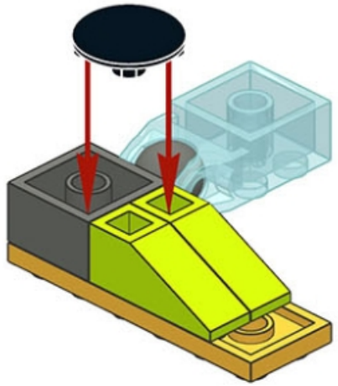

3

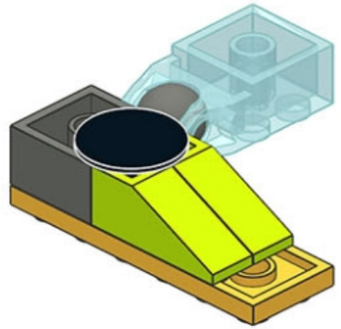

27/51

0

54

ROBORISE-IT!
ROBOTIC EDUCATION

# 28

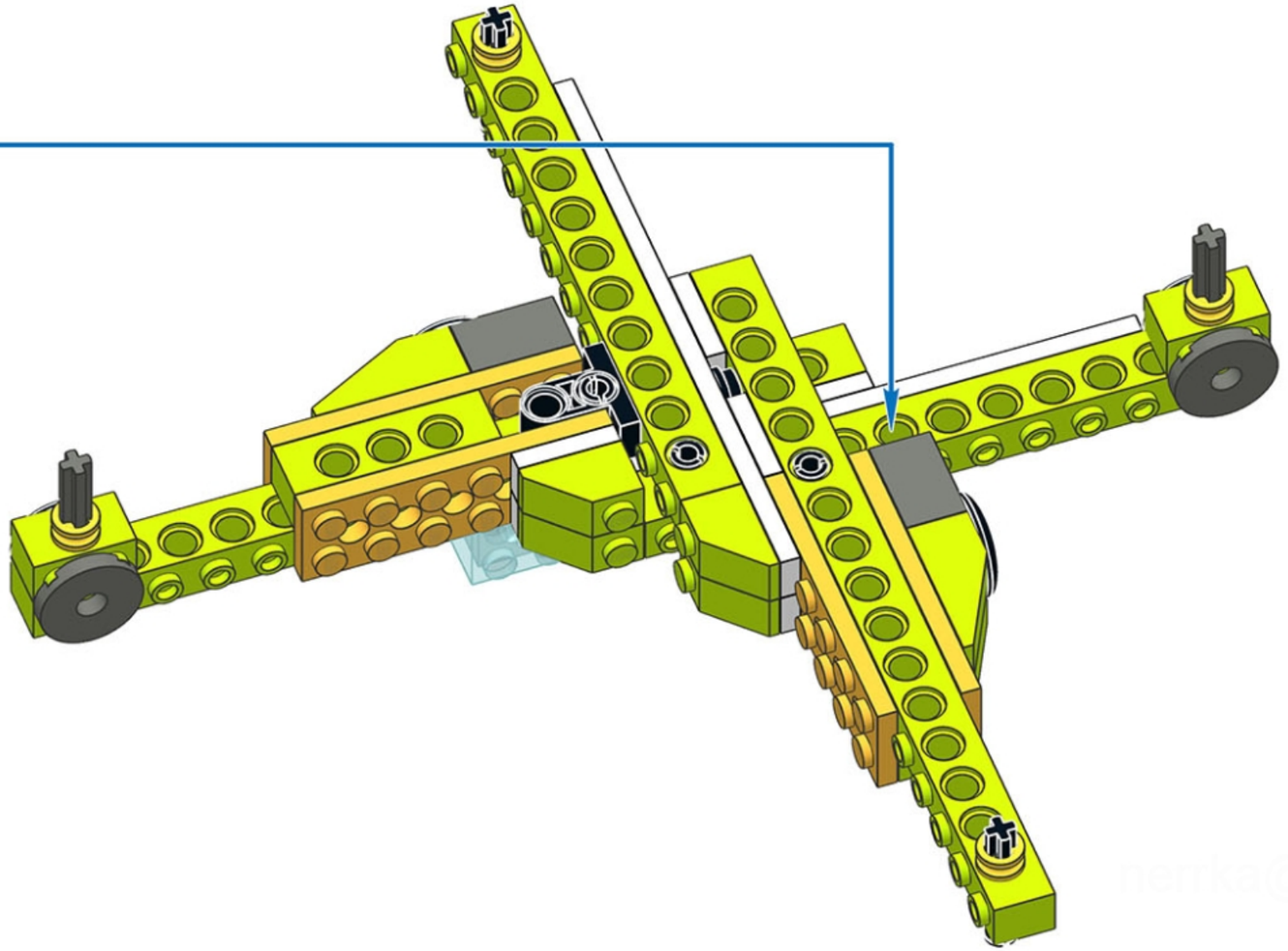

herka@gmail.com

28/51

0

55

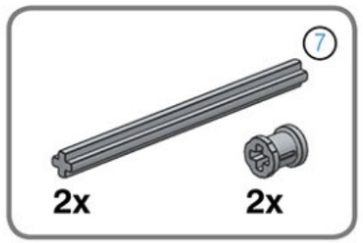


# 29

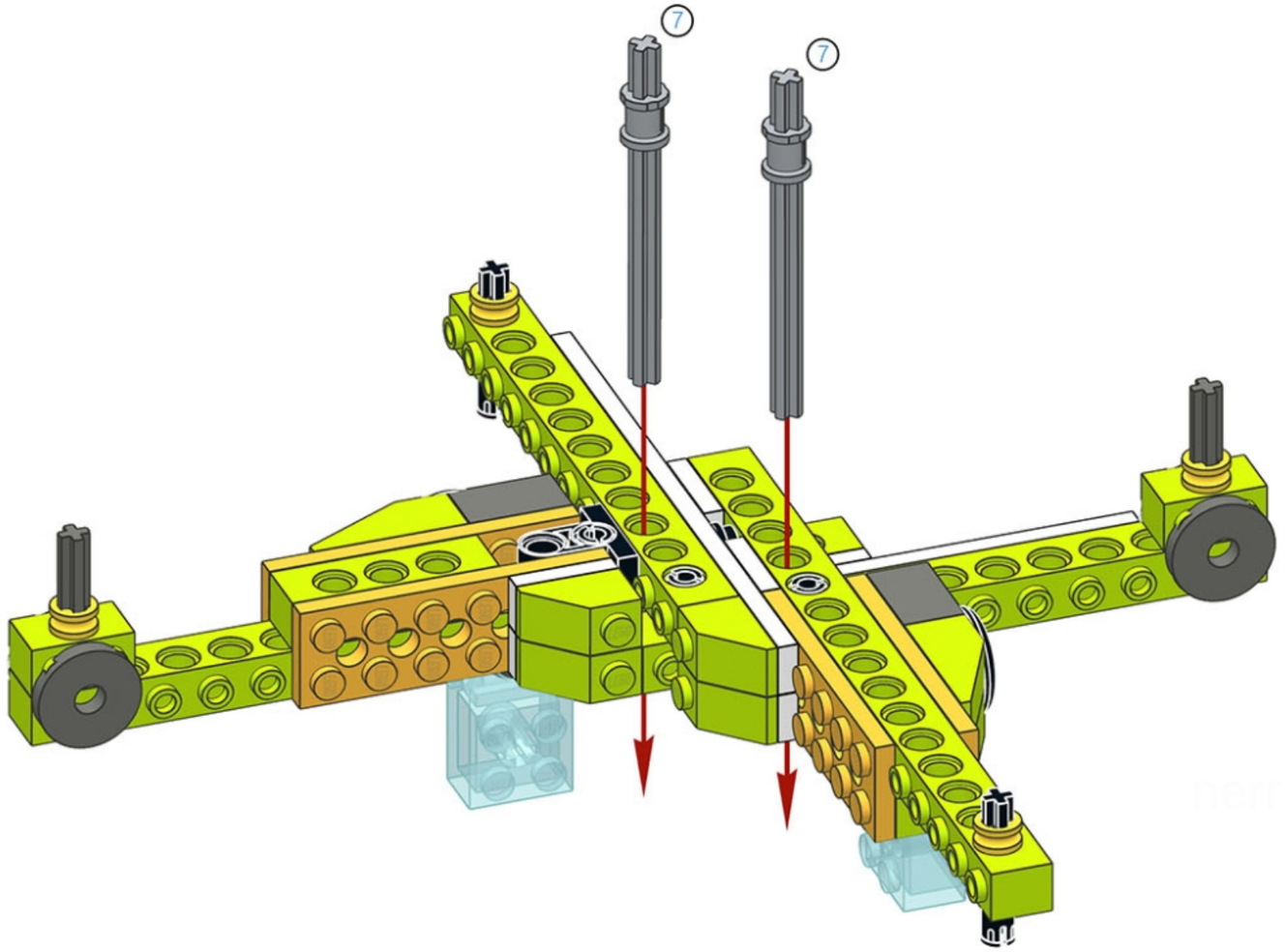


ROBORISE-IT!
ROBOTIC EDUCATION

nerka@gmail.com

# 30

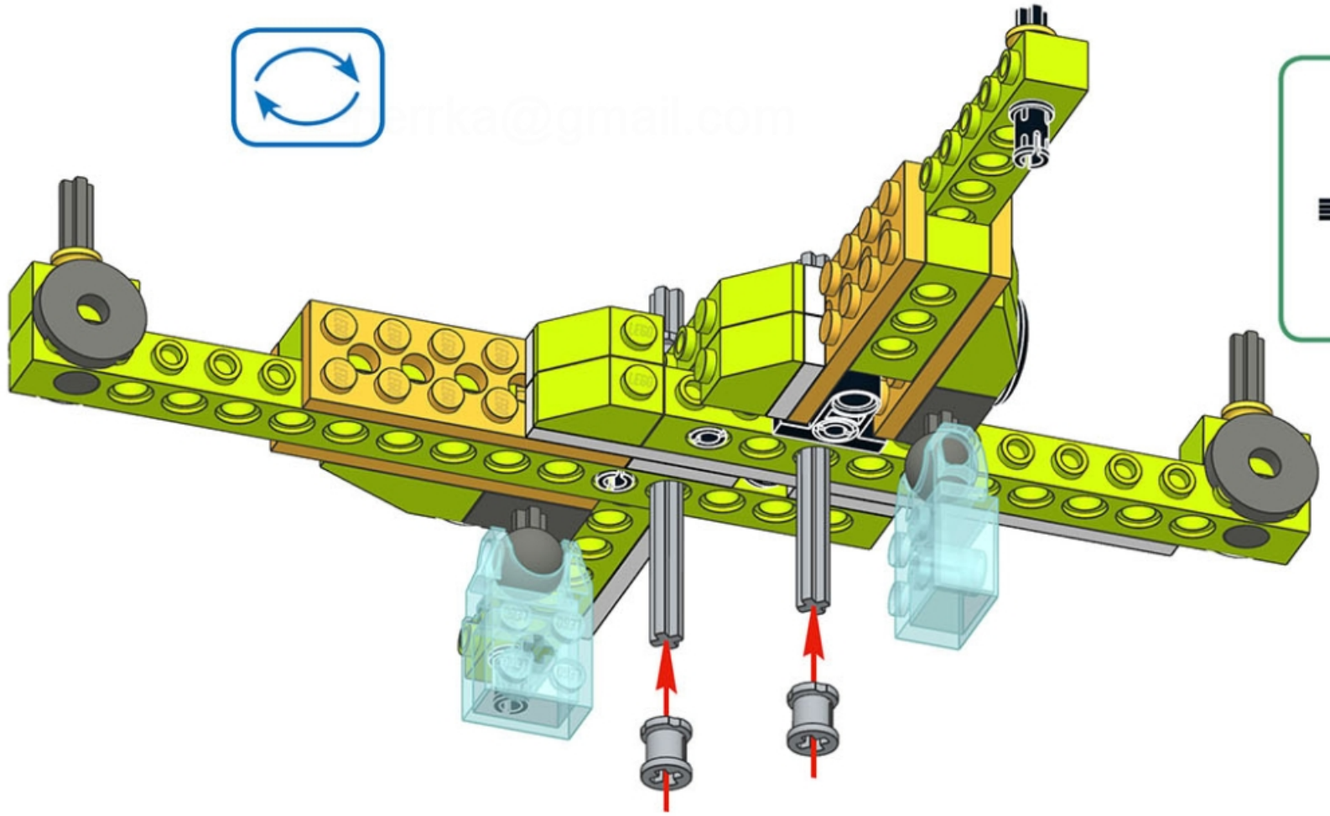

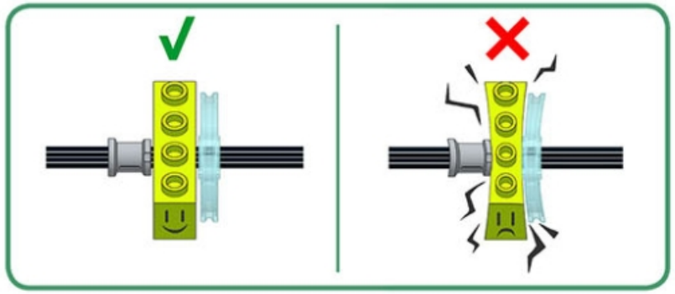

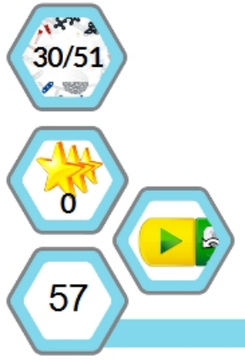


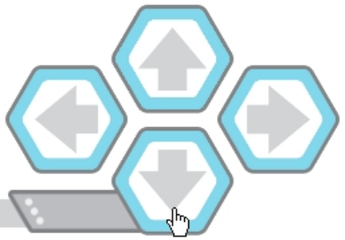

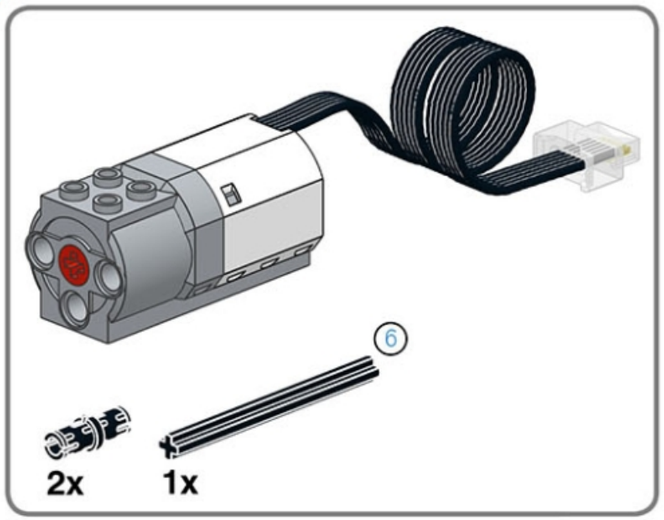


1

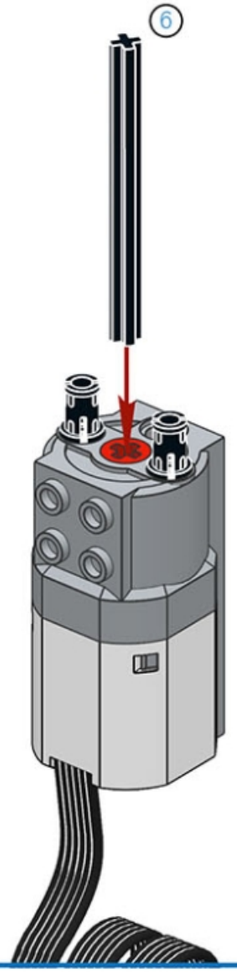


2

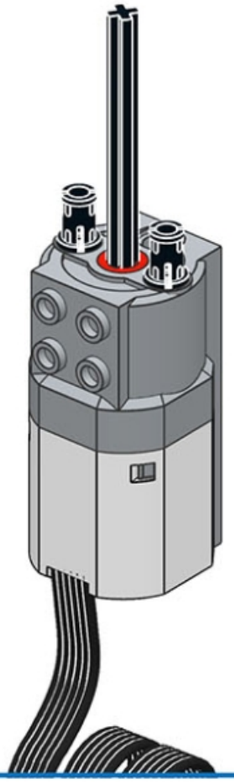

nerka@gmail.com

ROBORISE-IT!
ROBOTIC EDUCATION

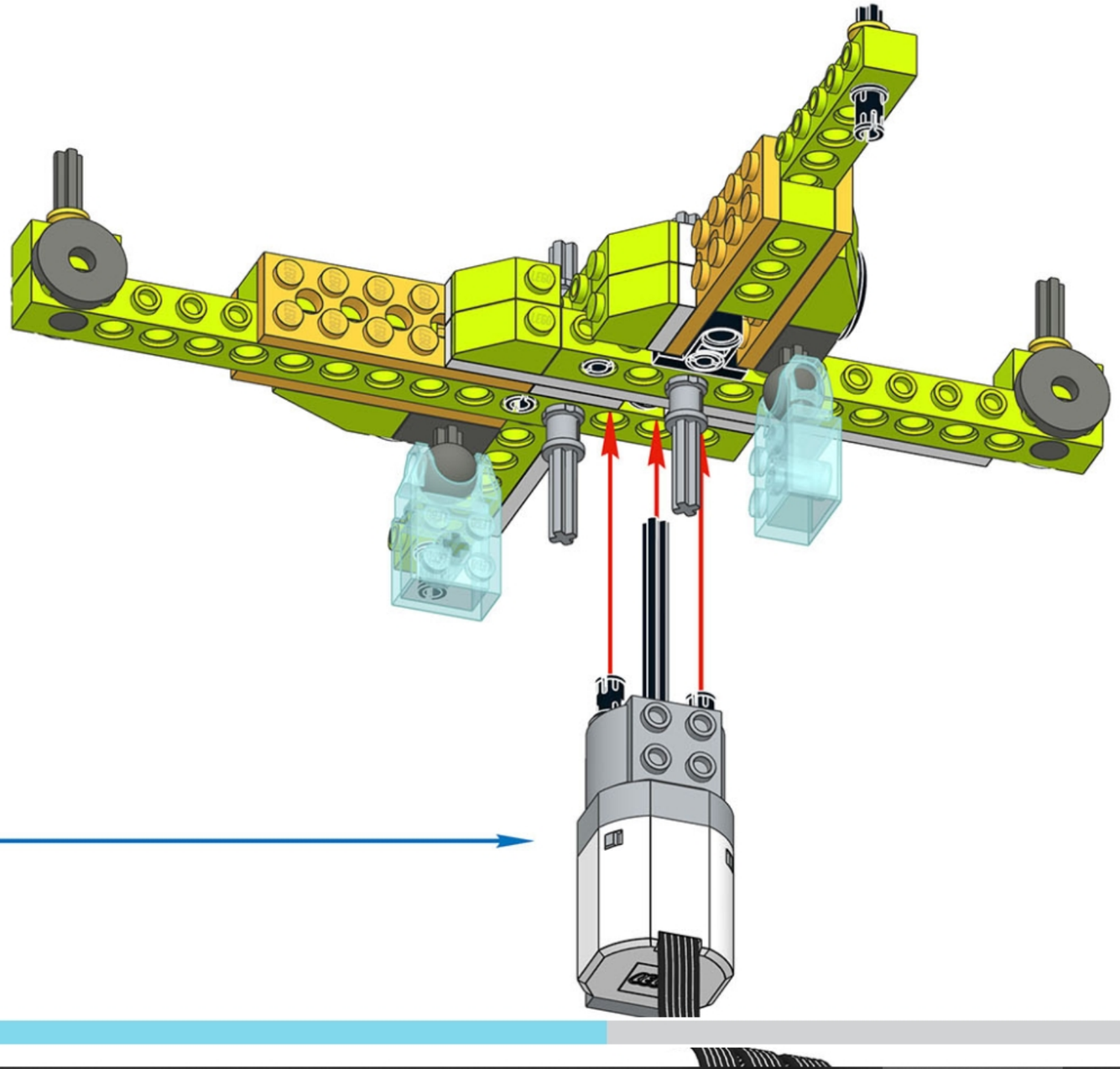

herrka@gmail.com

ROBORISE-IT!
ROBOTIC EDUCATION

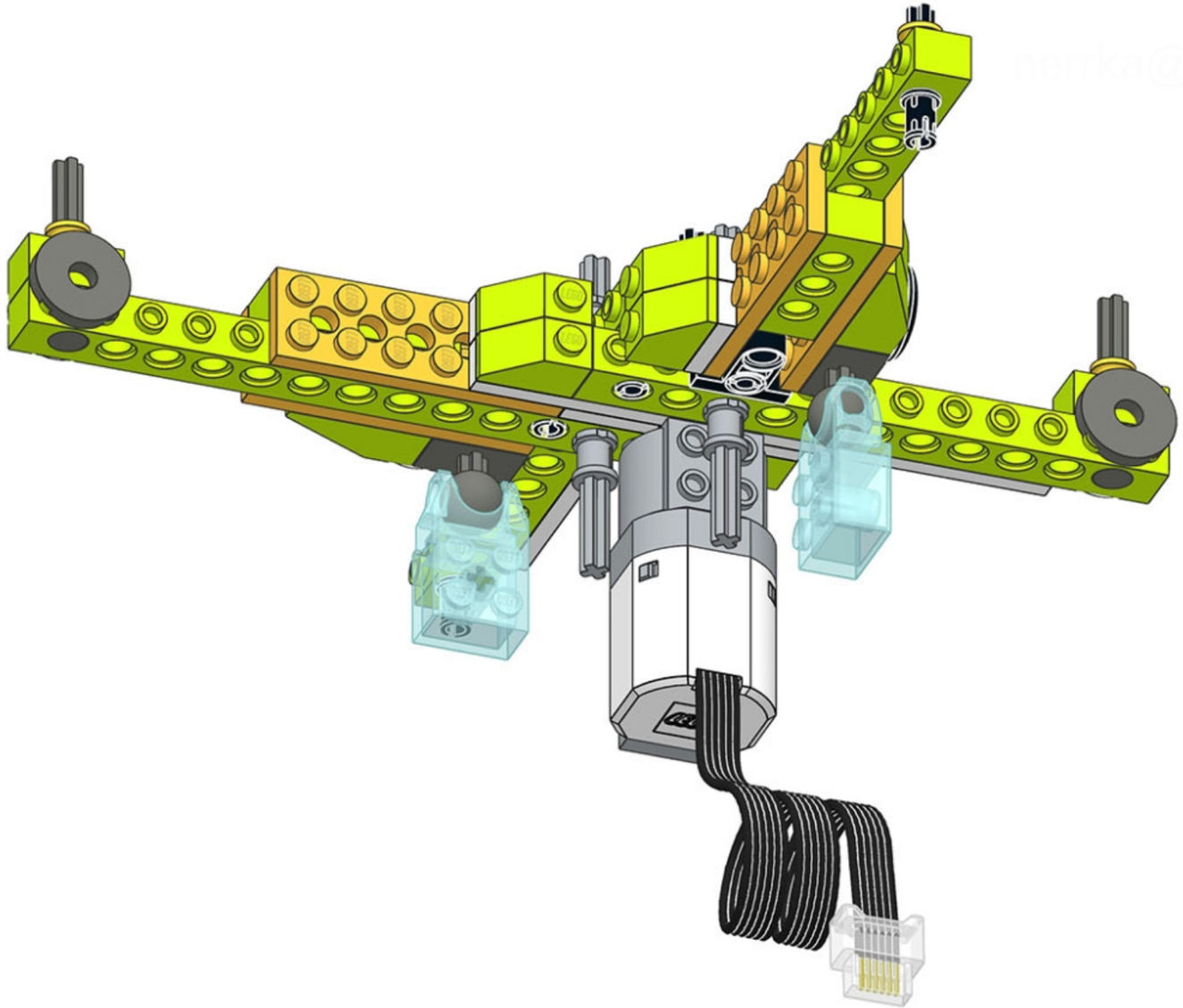

nerrka@gmail.com

ROBORISE-IT!
ROBOTIC EDUCATION

2x

# 34

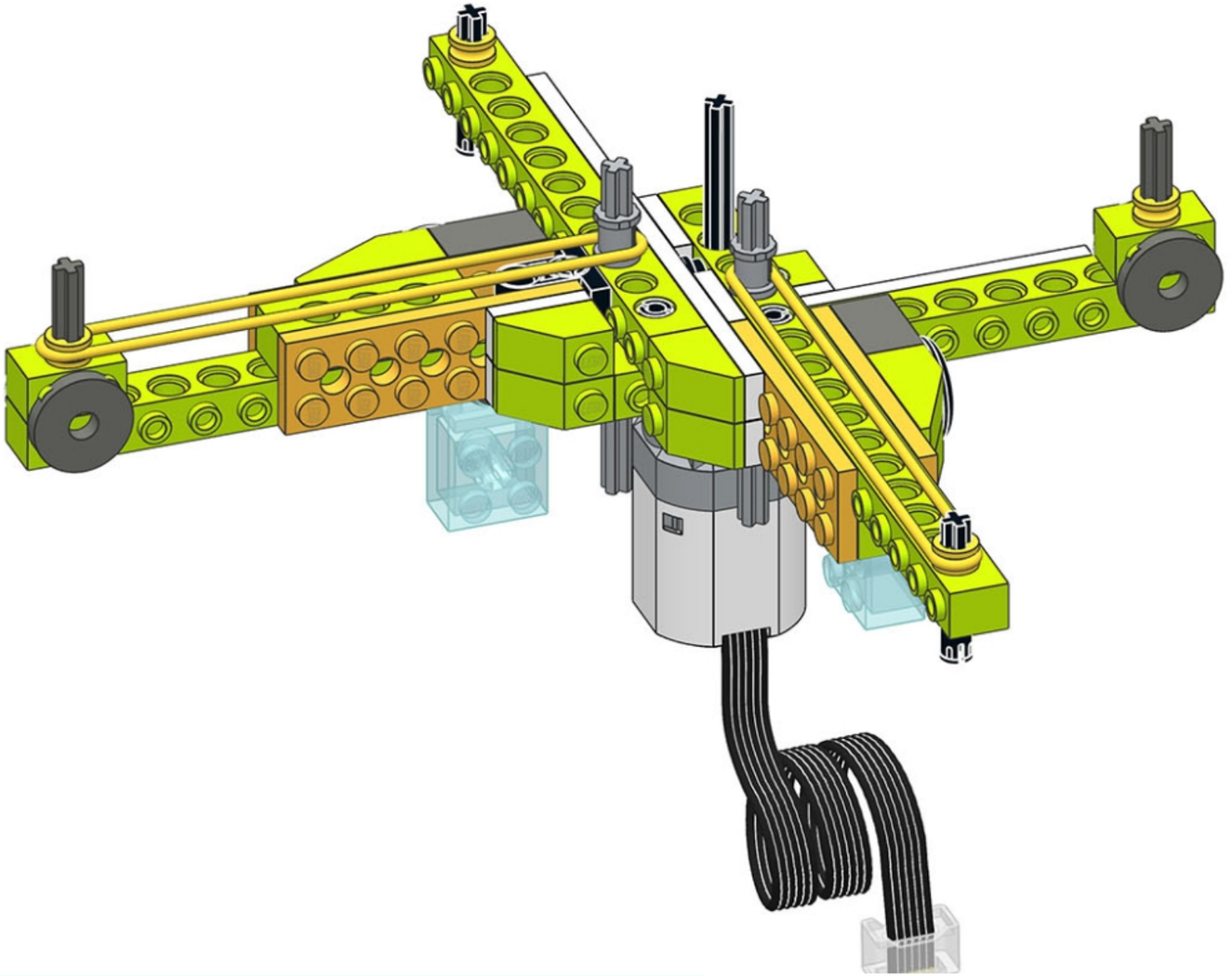

34/51

0

61

ROBORISE-IT!
ROBOTIC EDUCATION

2x

35

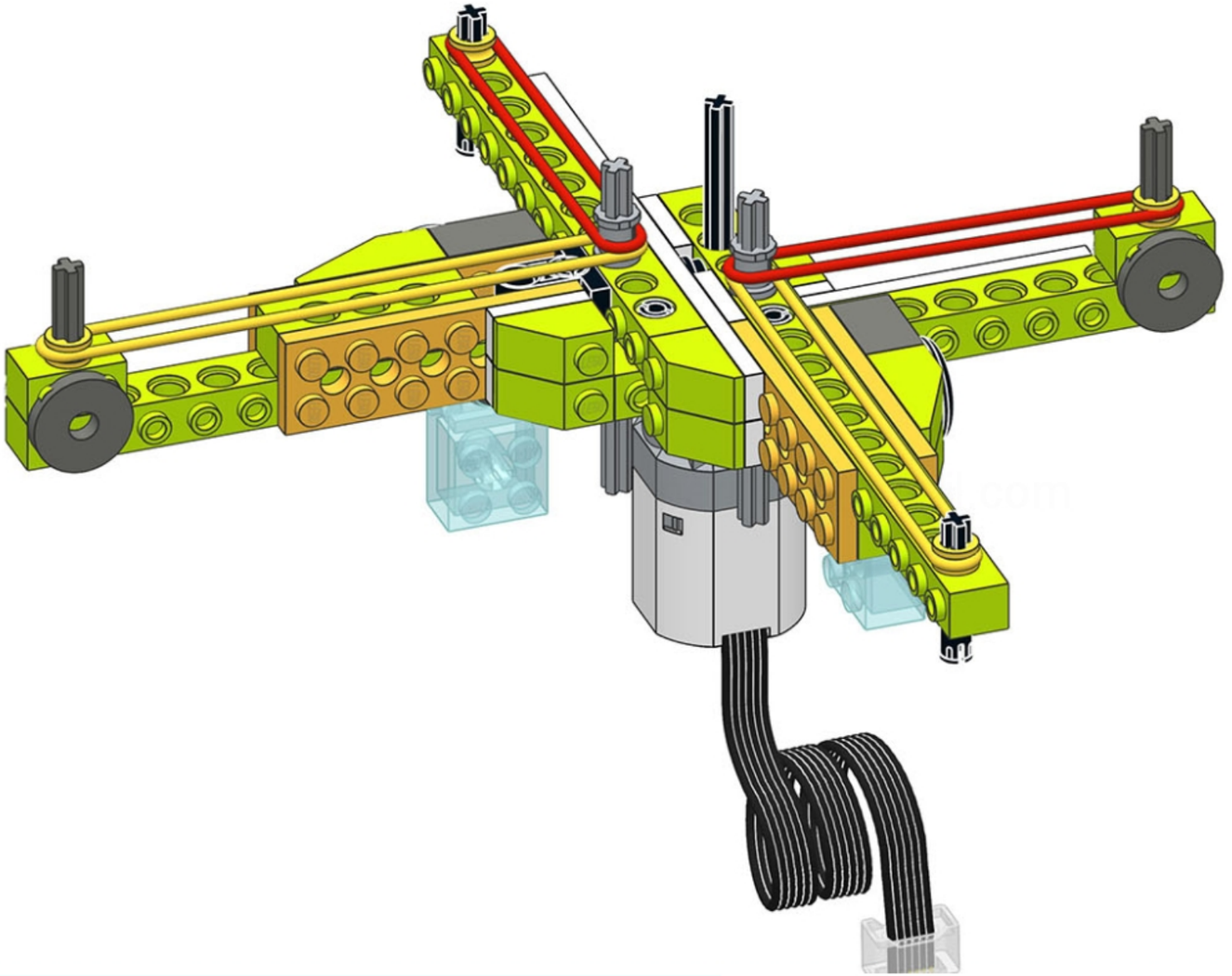

35/51

0

62

36

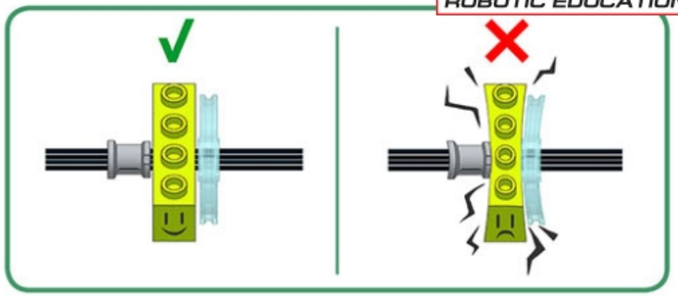


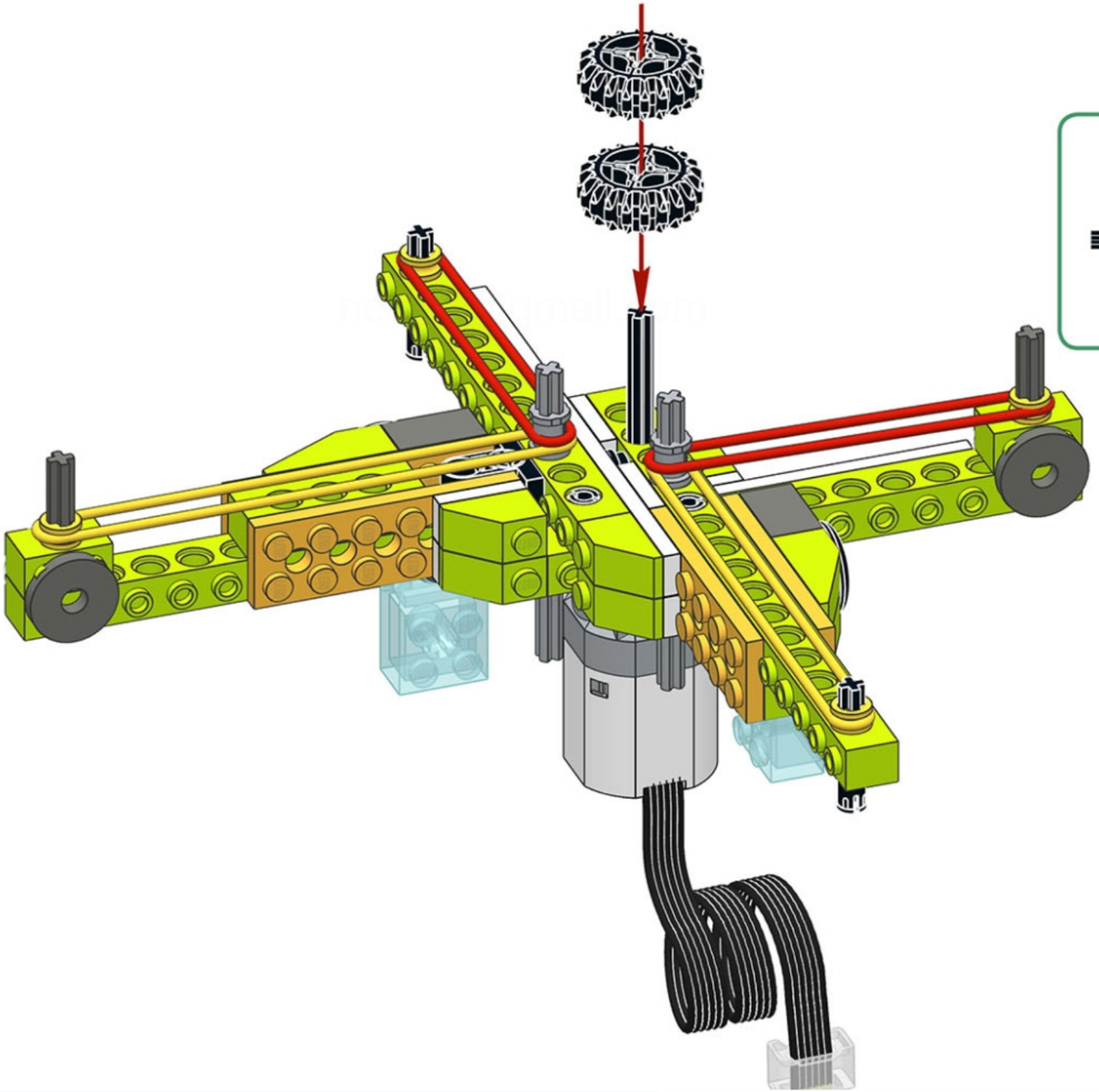

36/51

0

63

ROBORISE-IT!
ROBOTIC EDUCATION

2x

37

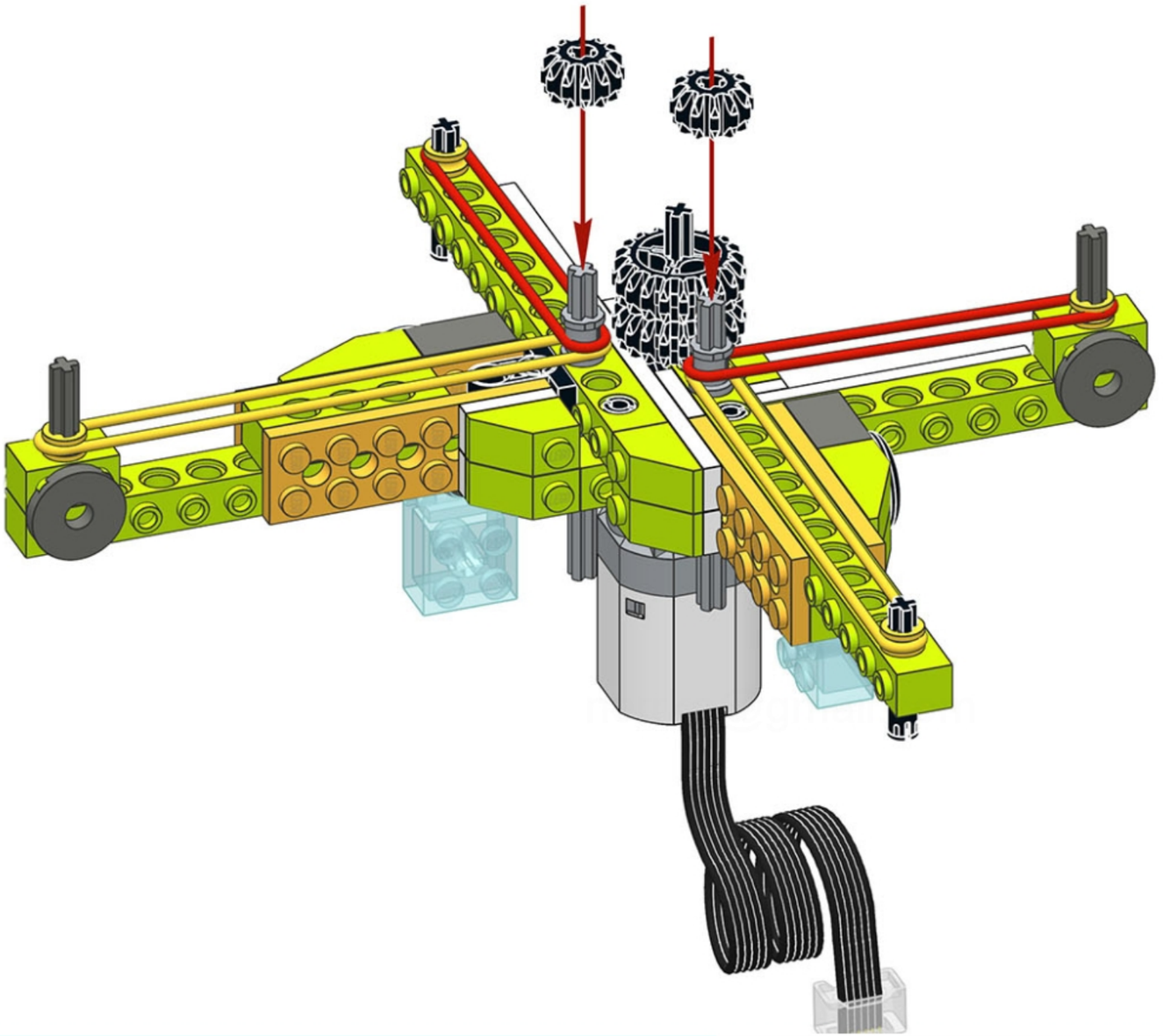

37/51

0

64

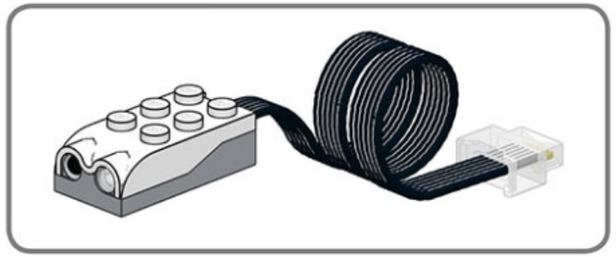

38

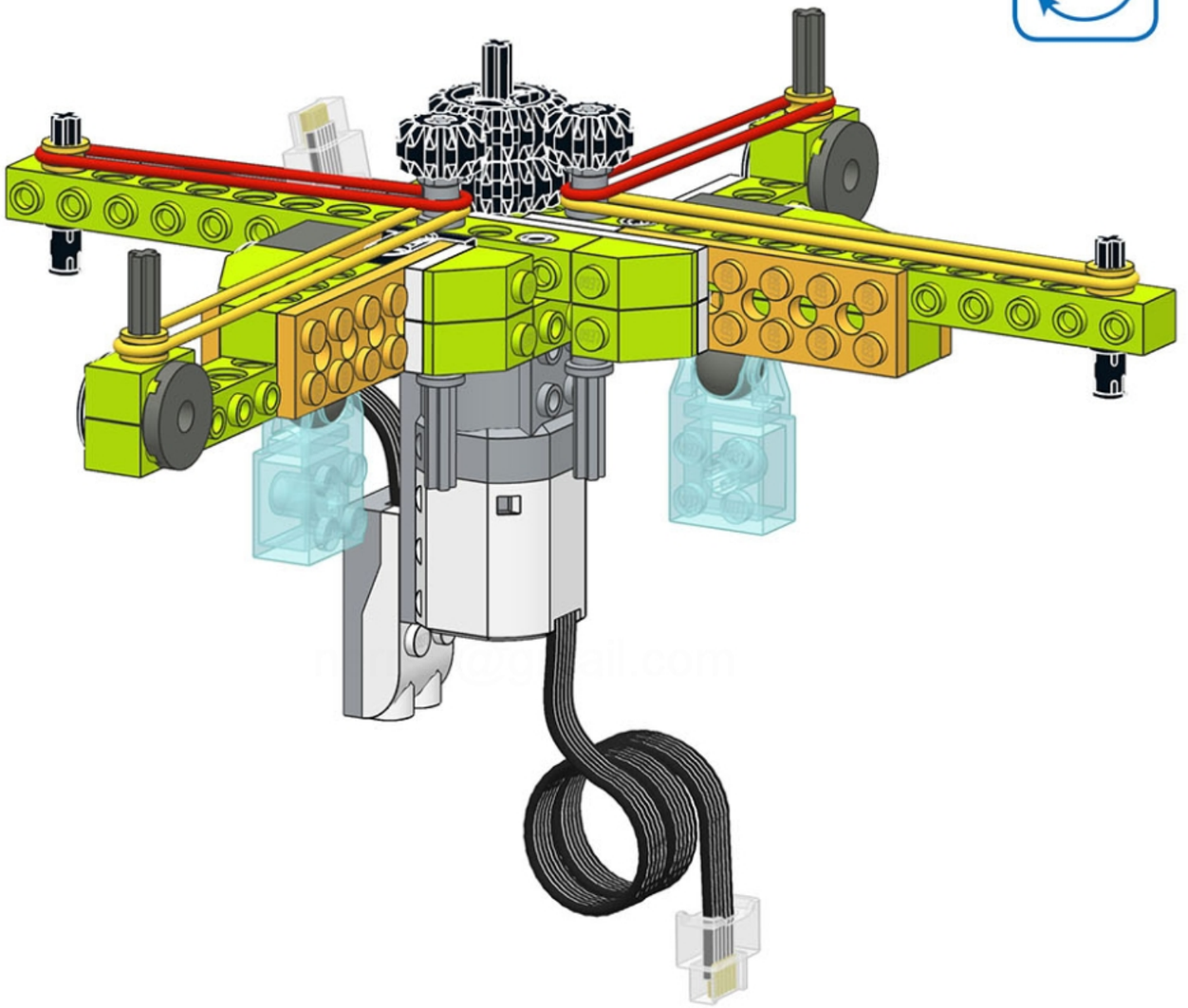

38/51

0

65

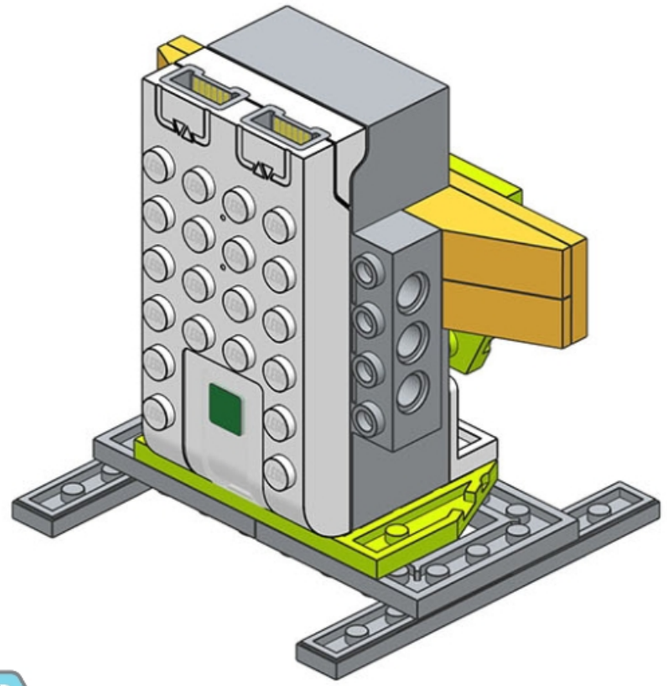

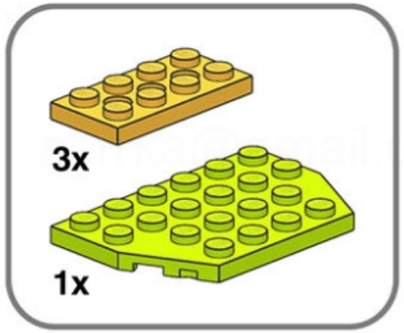


**39**

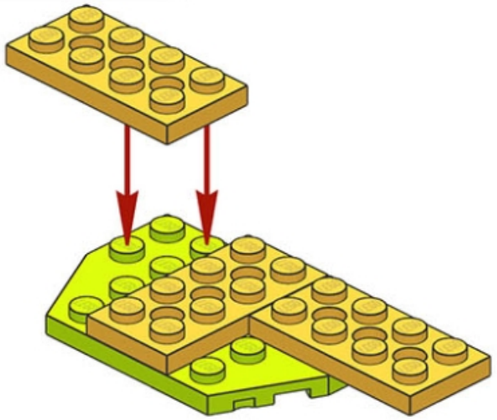

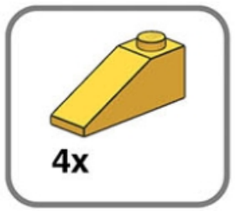


# 40

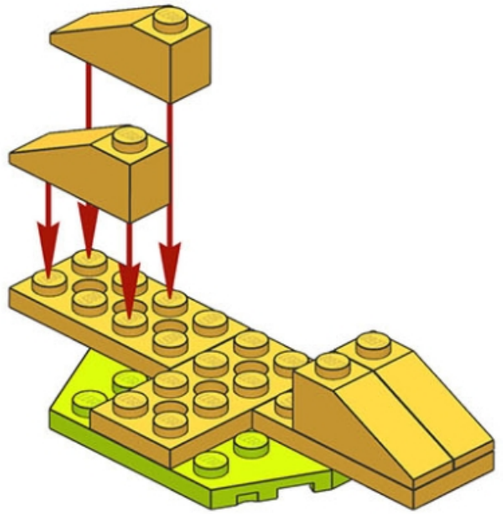

ROBORISE-IT!
ROBOTIC EDUCATION



narrka@gmail.com

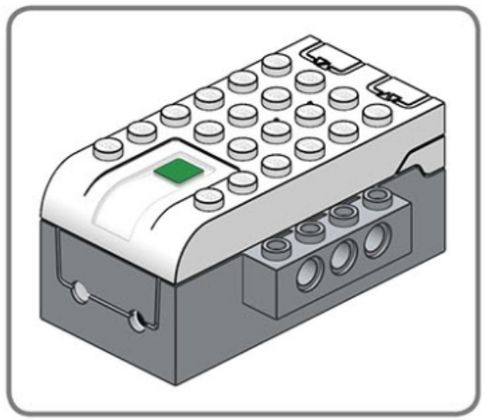

# 41

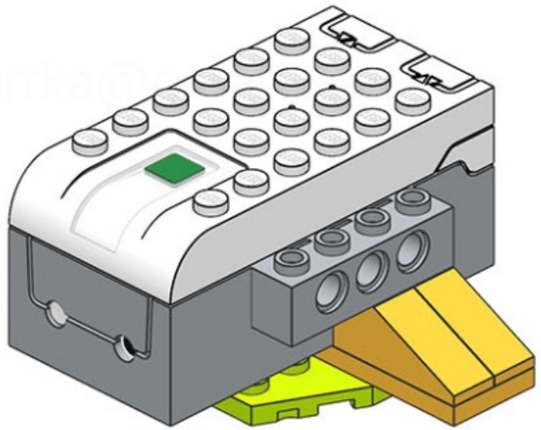

ROBORISE-IT!
ROBOTIC EDUCATION

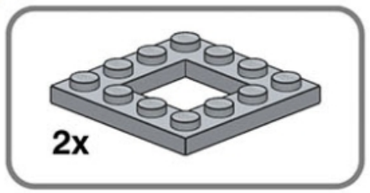


**1**

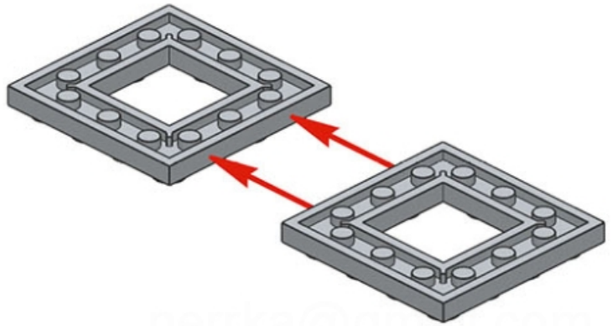

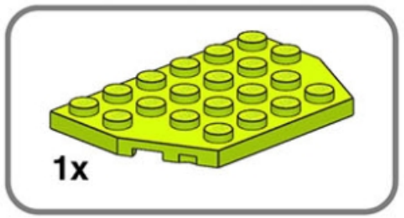


**2**

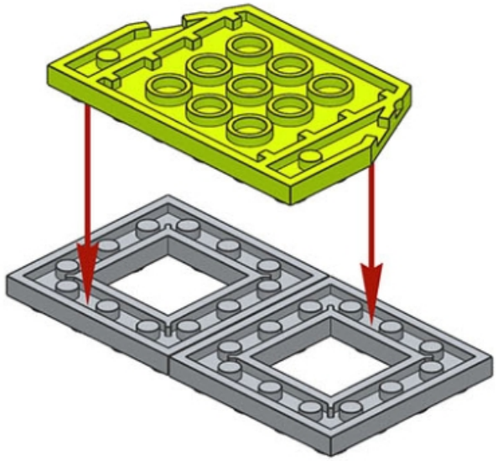

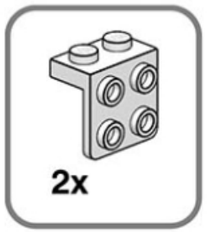


**3**

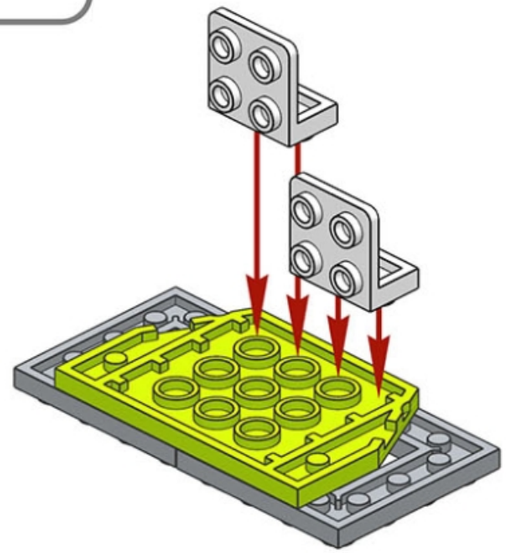

nerrka@gmail.com

42/51

0

69

nerka@gmail.com

ROBORISE-IT!
ROBOTIC EDUCATION

# 4

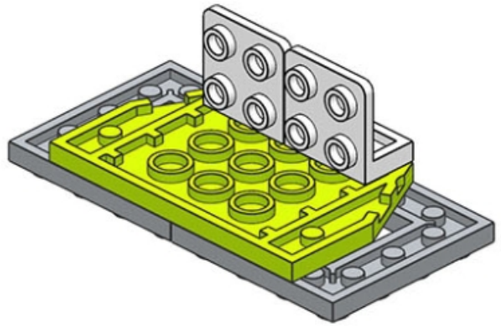

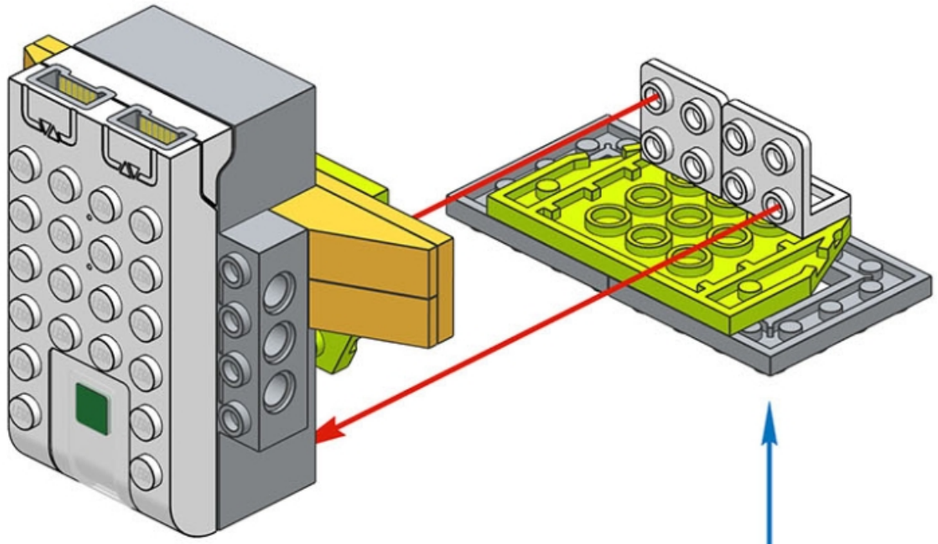

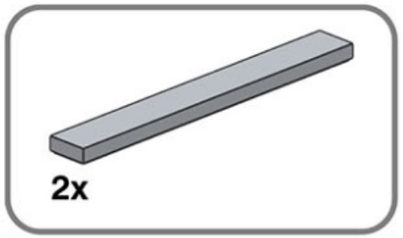


# 44

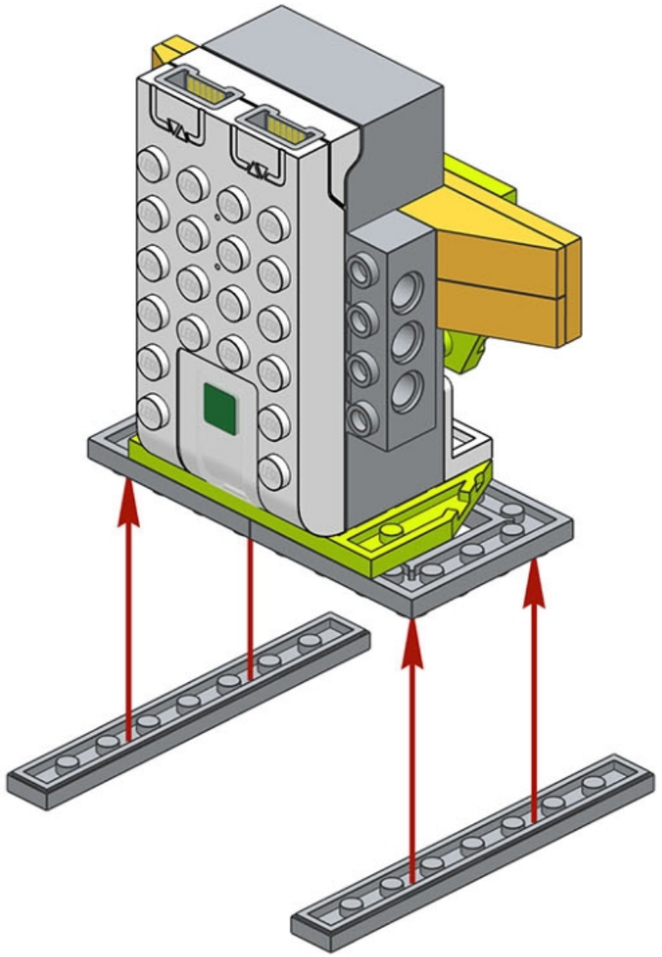

ROBORISE-IT!
ROBOTIC EDUCATION

# 45

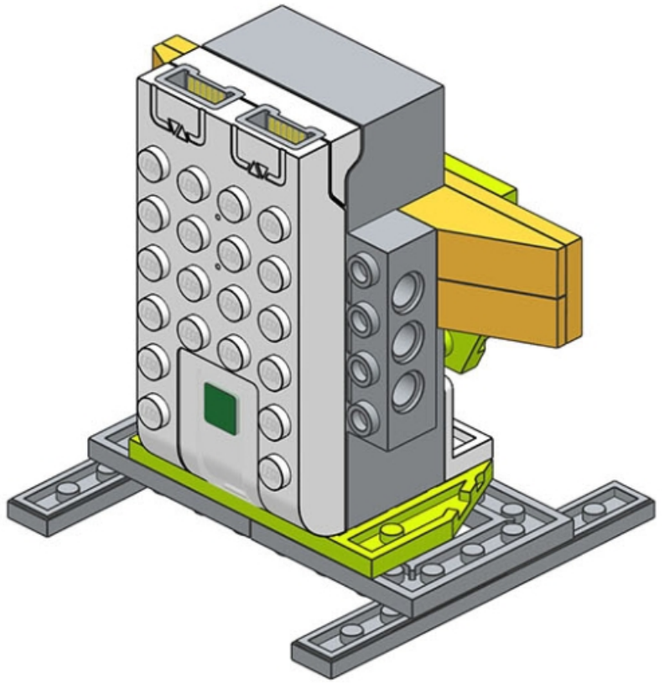

nerrka@gmail.com

46

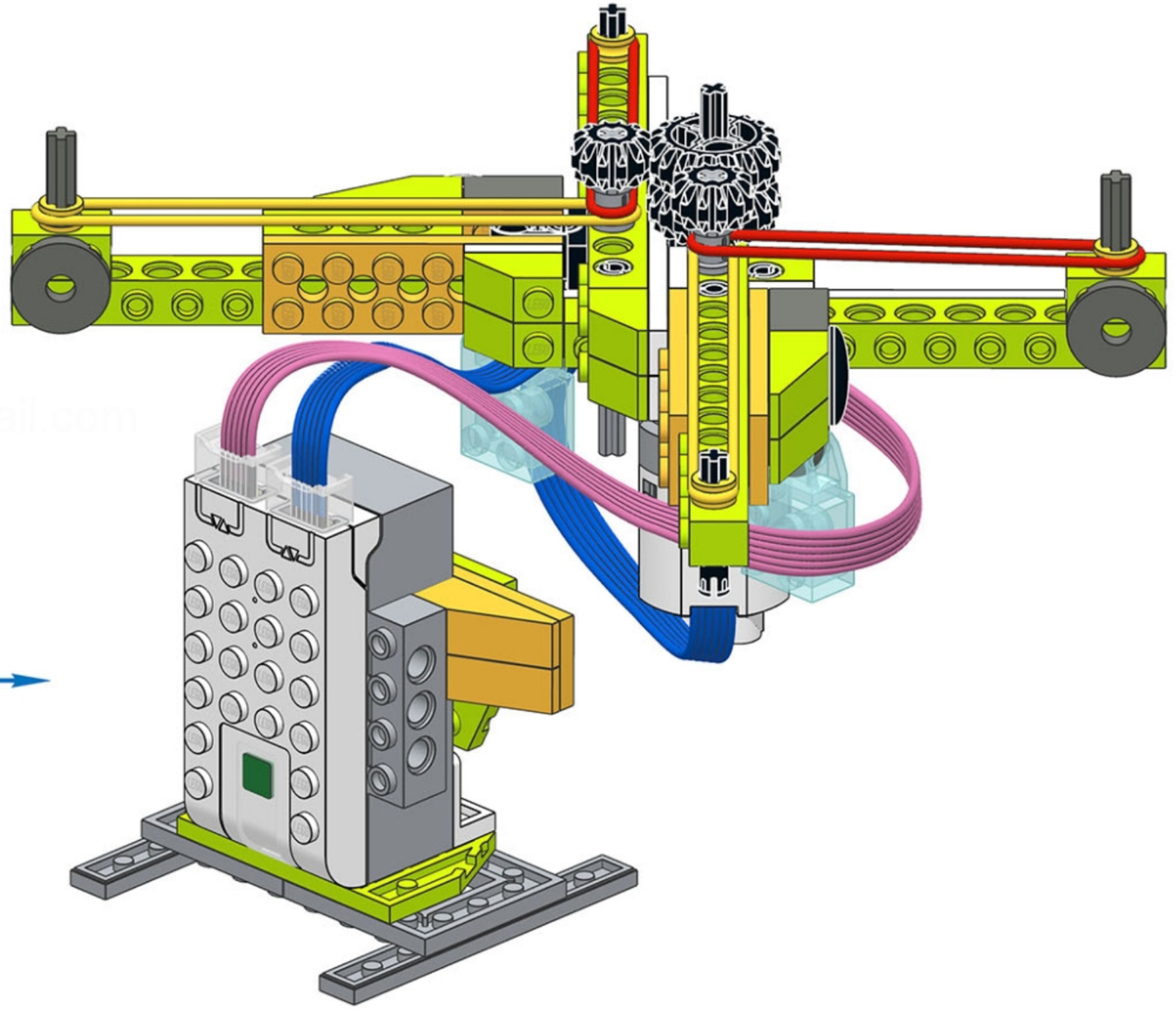

ROBORISE-IT!
ROBOTIC EDUCATION

46/51
0
73

# 47

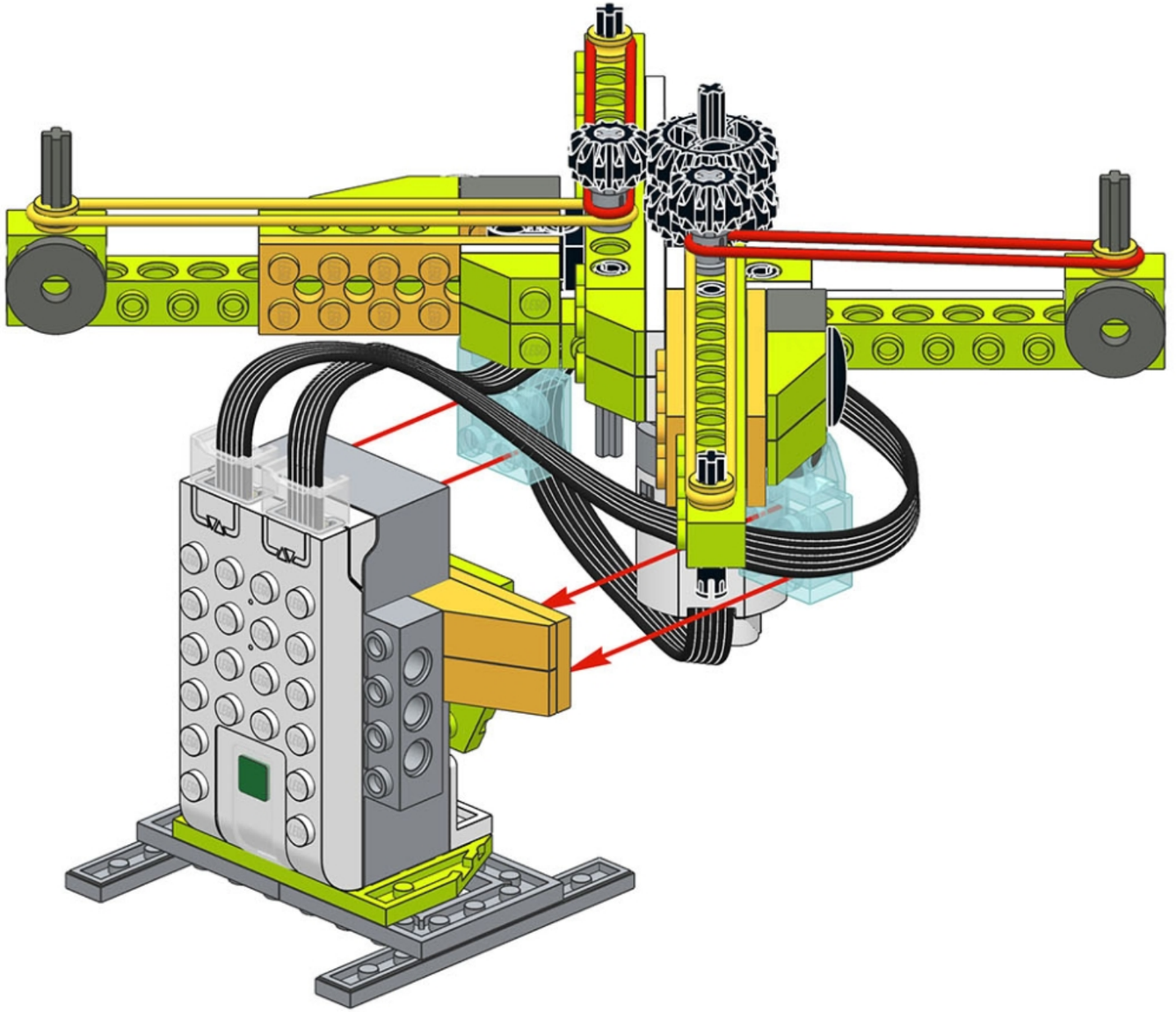

ROBORISE-IT!
ROBOTIC EDUCATION

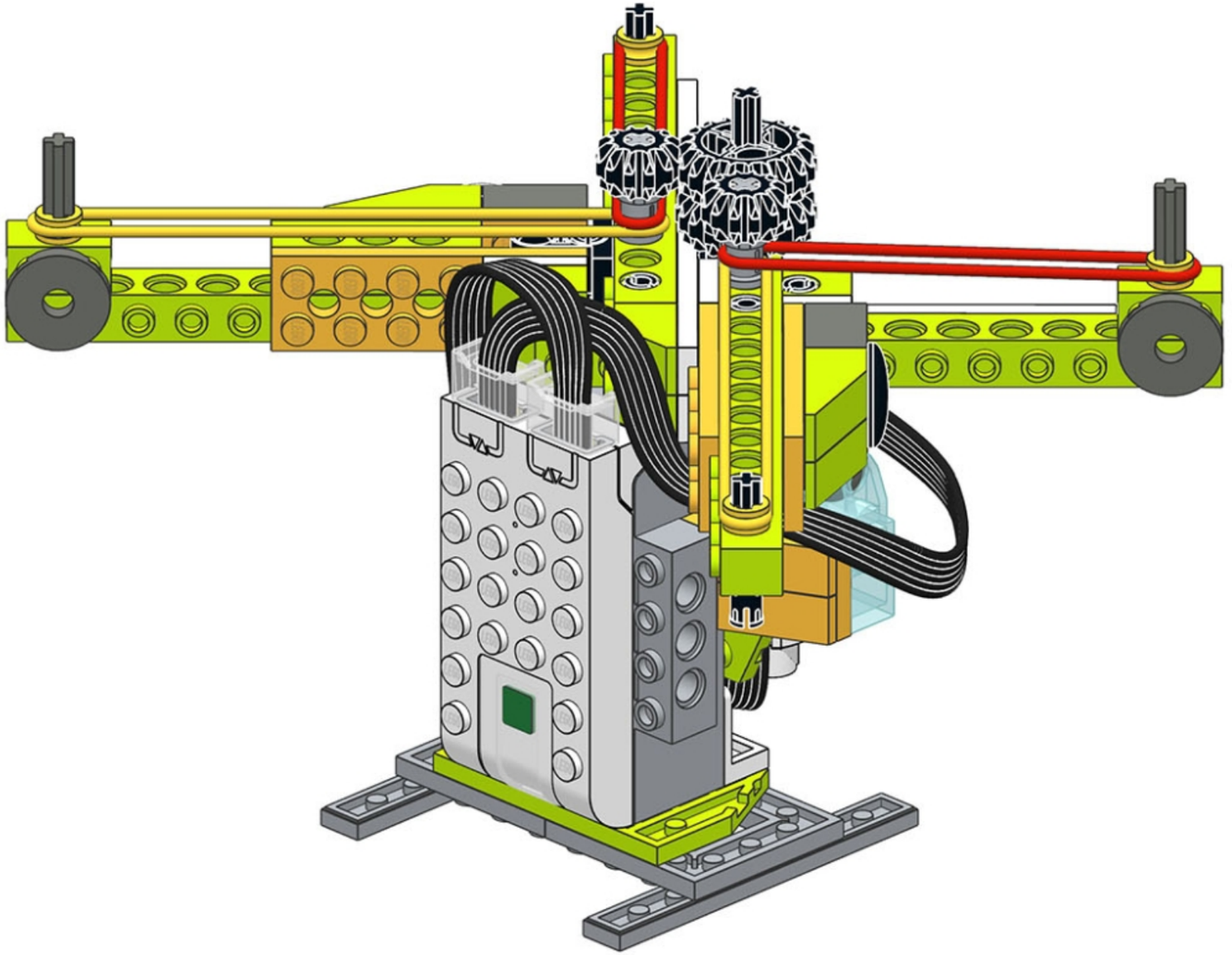

herka@gmail.com

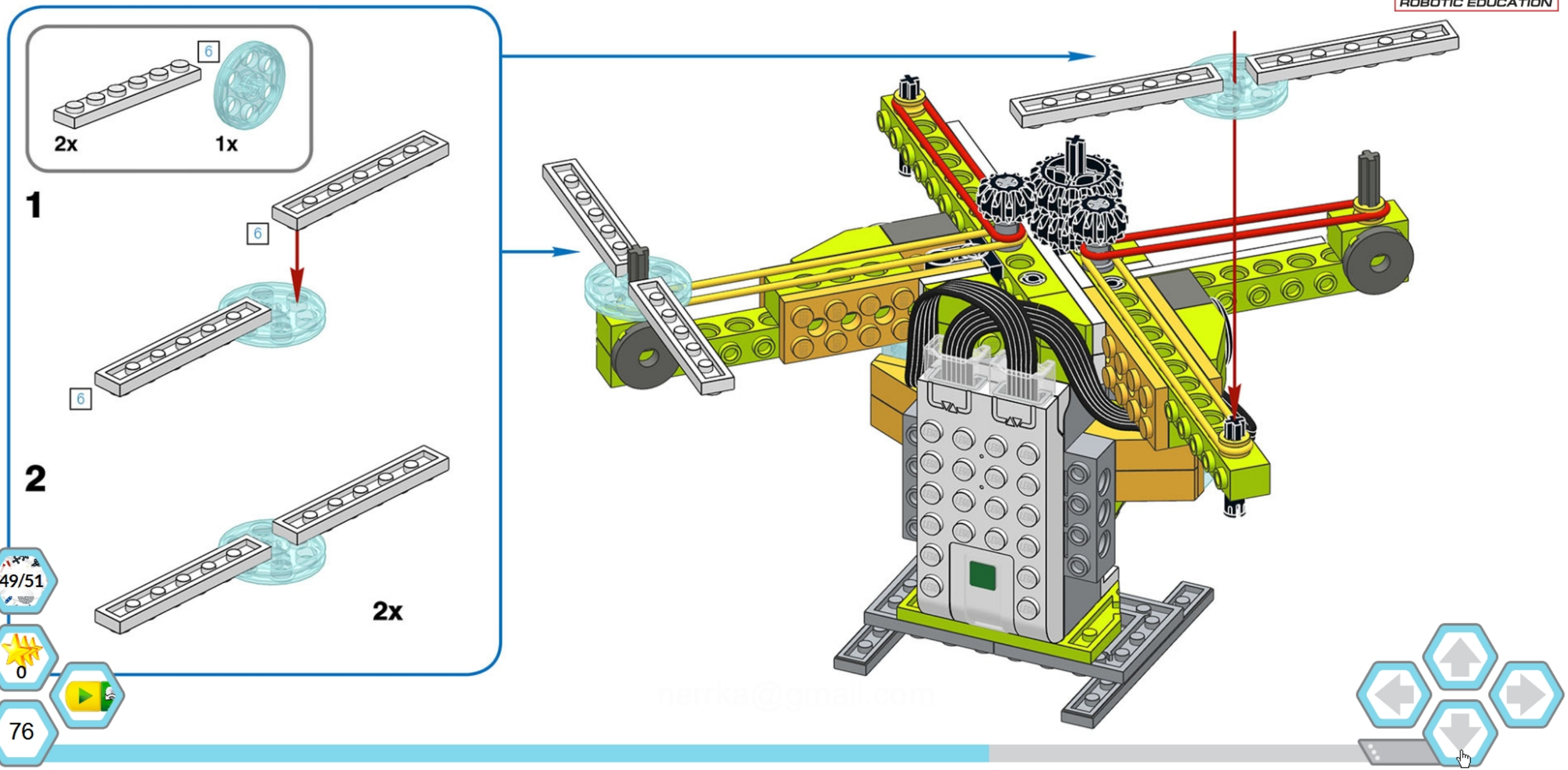
ROBORISE-IT!
ROBOTIC EDUCATION
6
2x
1x
1
6
6
2
2x
49/51
0
76

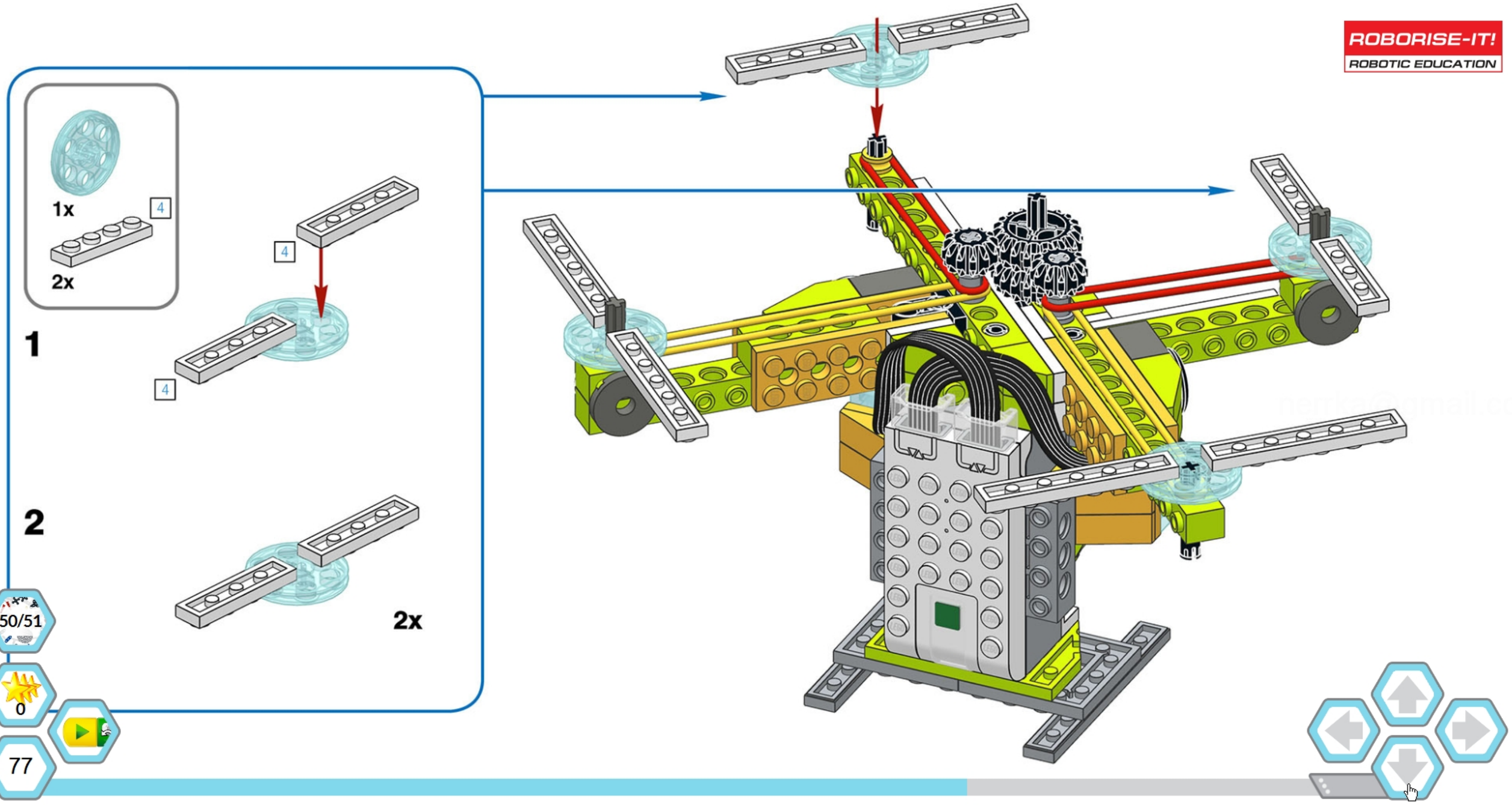
ROBORISE-IT!
ROBOTIC EDUCATION
1x
4
2x
1
4
4
2
2x
50/51
0
77

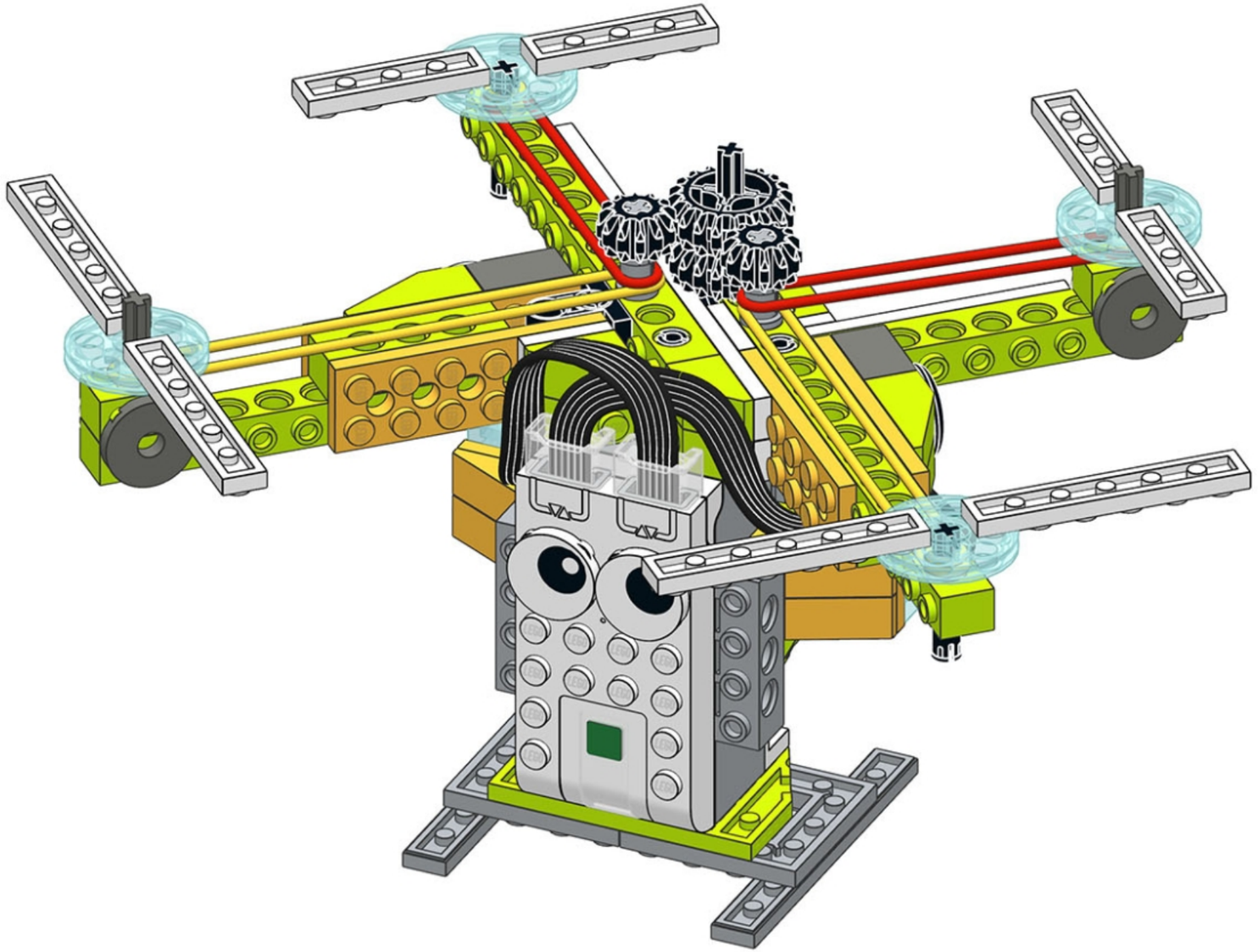


51

ROBORISE-IT!
ROBOTIC EDUCATION

nemka@gmail.com

51/51

0

78

# Enhanced version

ROBORISE-IT!
ROBOTIC EDUCATION

Add the stabilised hand and the camera to your robot!

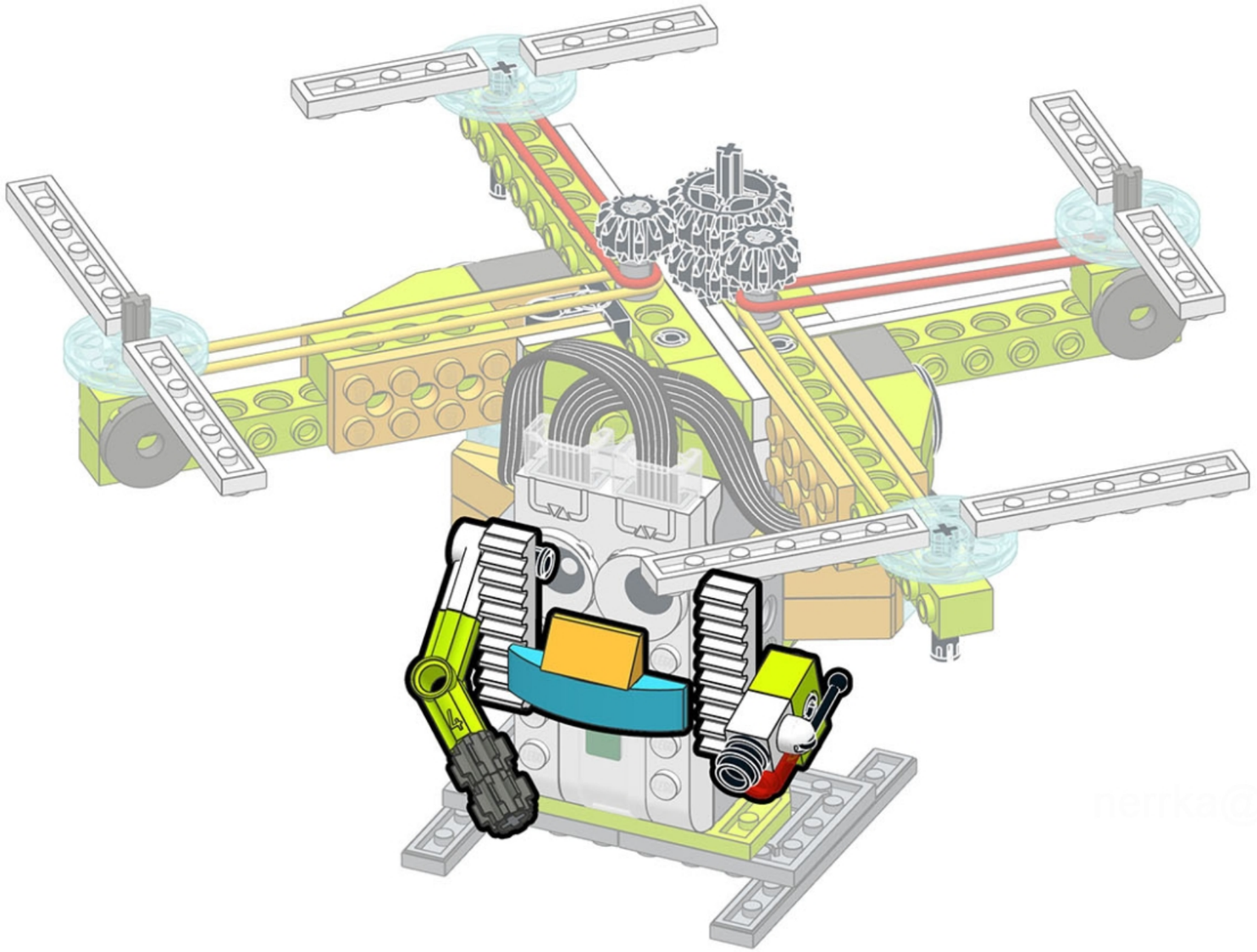

ROBORISE-IT!
ROBOTIC EDUCATION

1/9

0

80

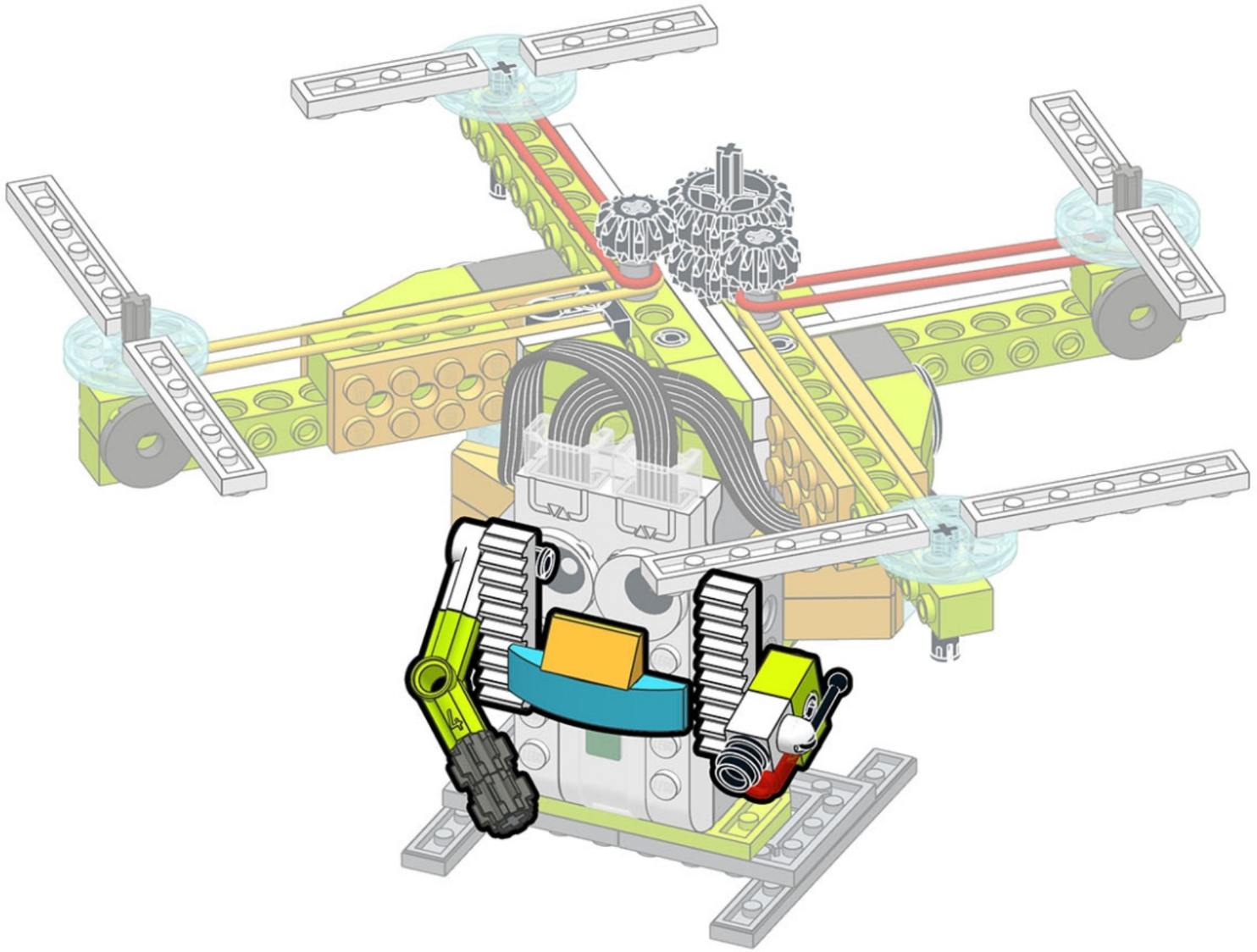

ROBORISE-IT!
ROBOTIC EDUCATION

1/9

0

80

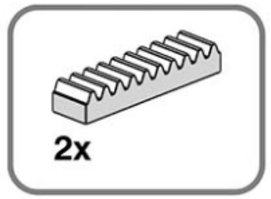


52

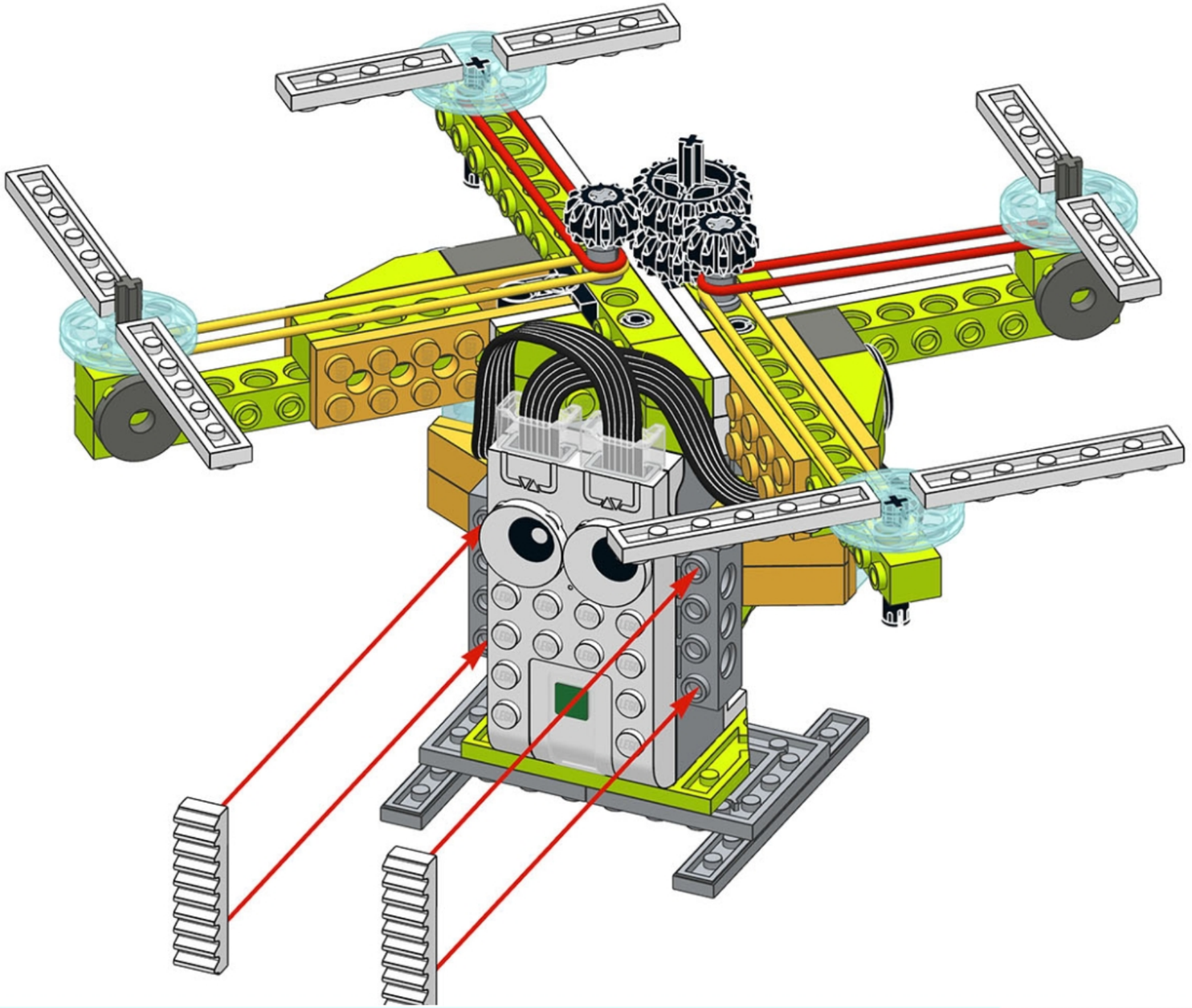

ROBORISE-IT!
ROBOTIC EDUCATION

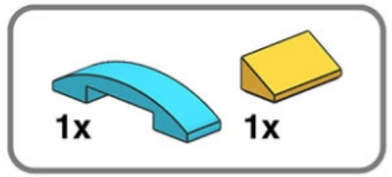


53

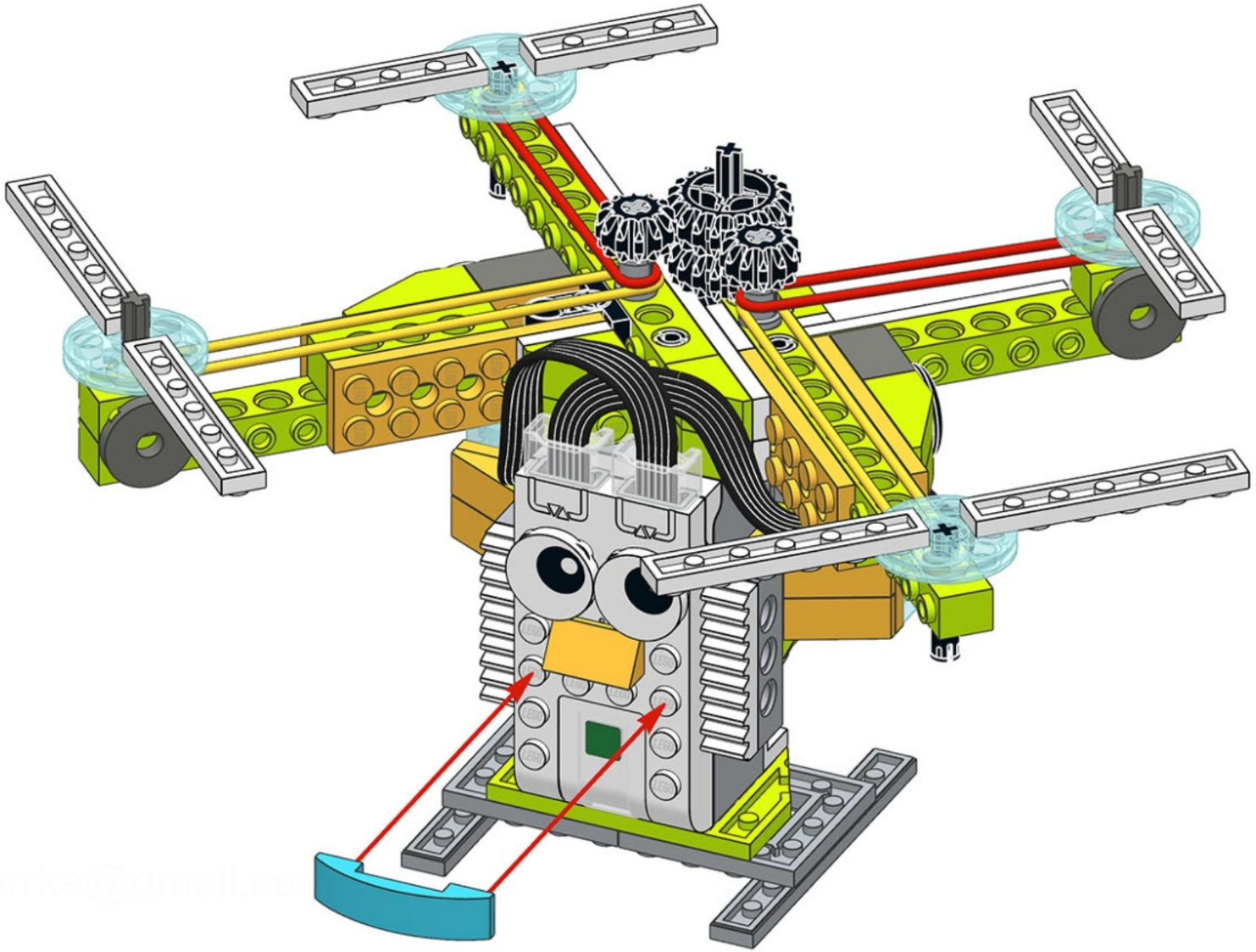

ROBORISE-IT!
ROBOTIC EDUCATION

3/9

0

82

ROBORISE-IT!
ROBOTIC EDUCATION

1x 1x 1x 1x

**1**

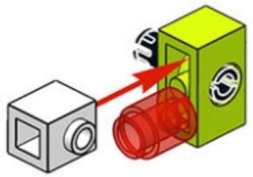

2x

**2**

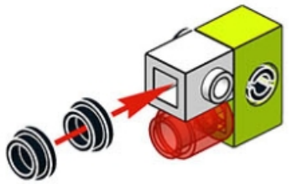

1x

**3**

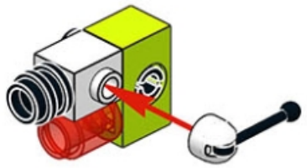

**4**

nerka@gmail.com

4/9

0

83

ROBORISE-IT!
ROBOTIC EDUCATION

55

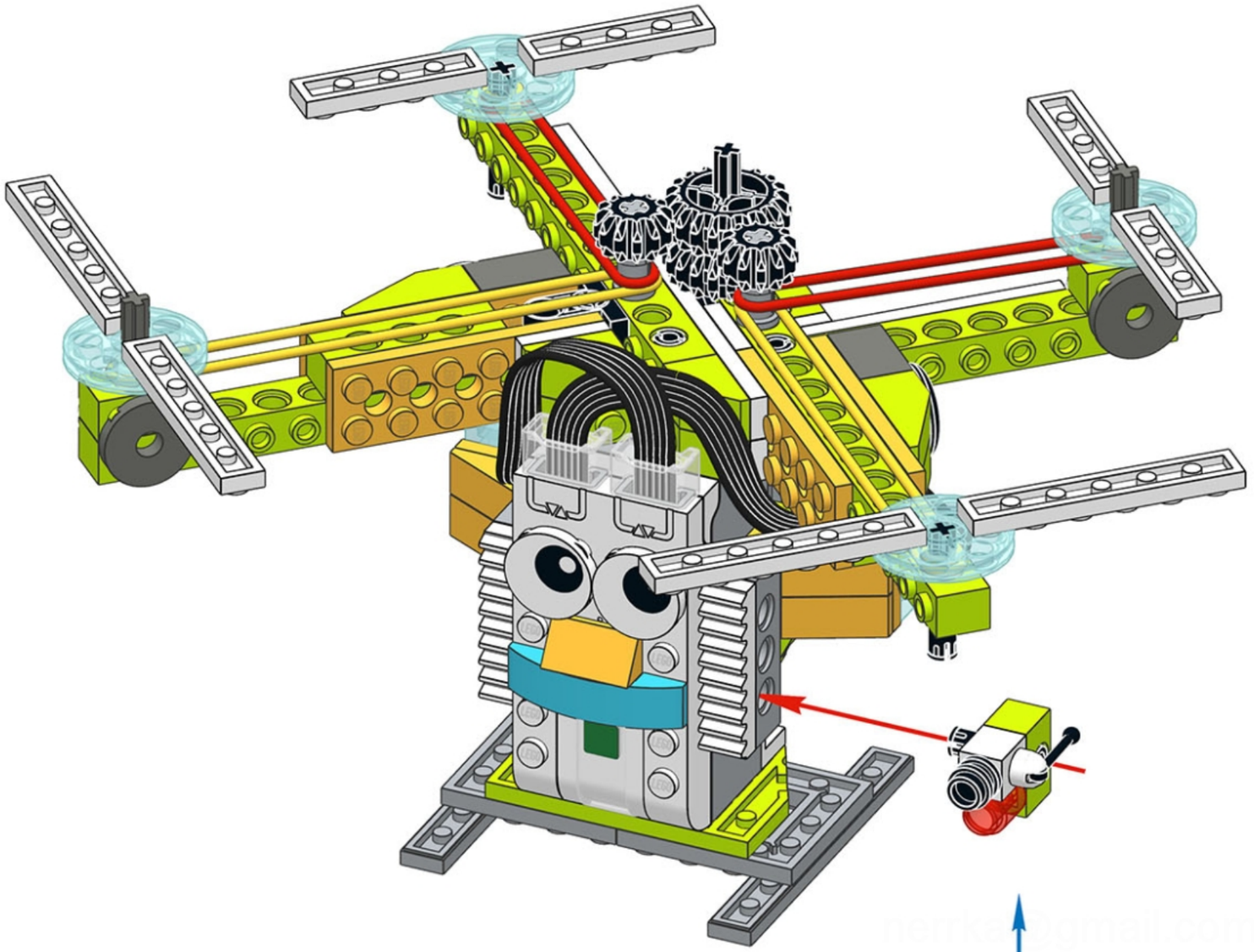

5/9

0

84

ROBORISE-IT!
ROBOTIC EDUCATION

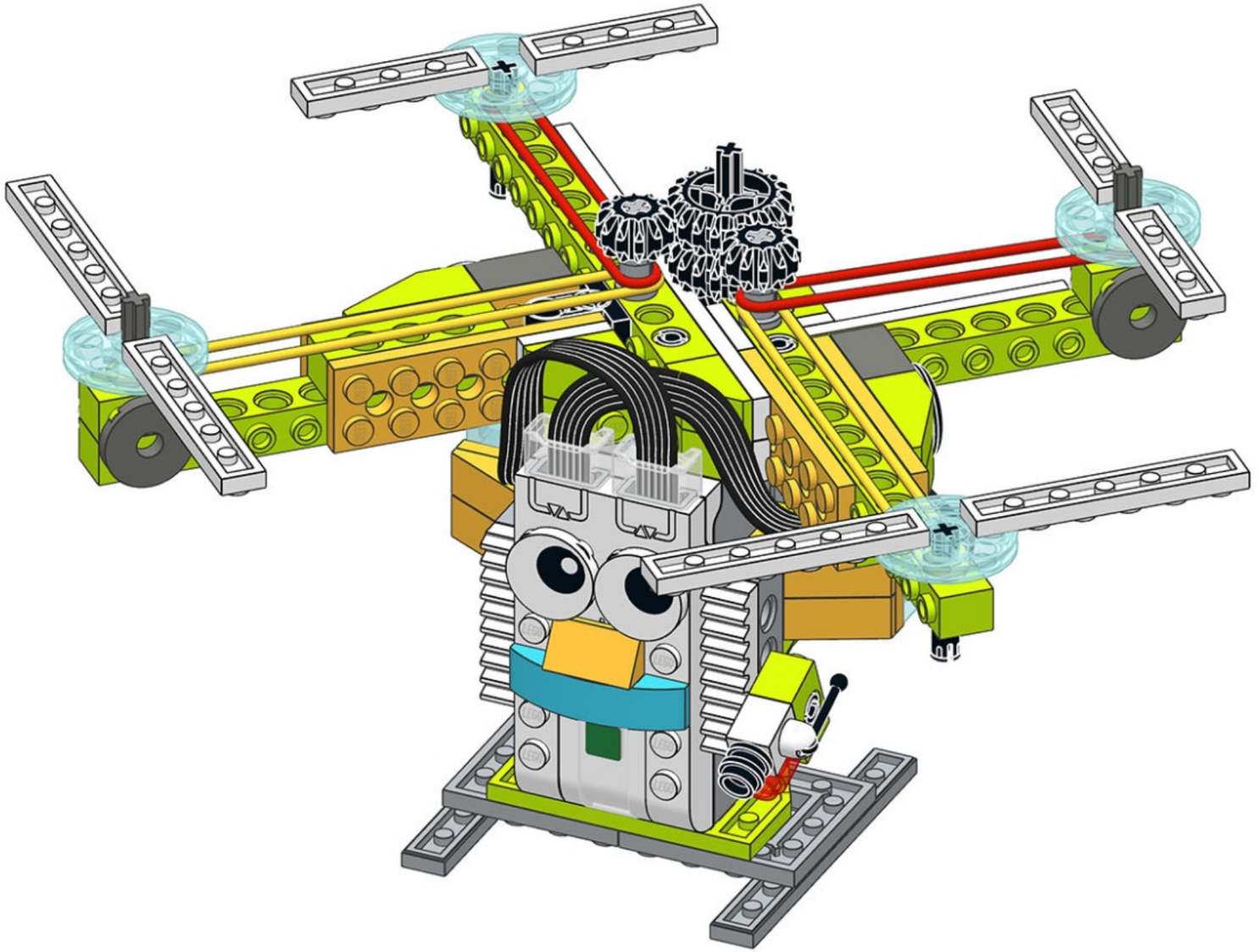

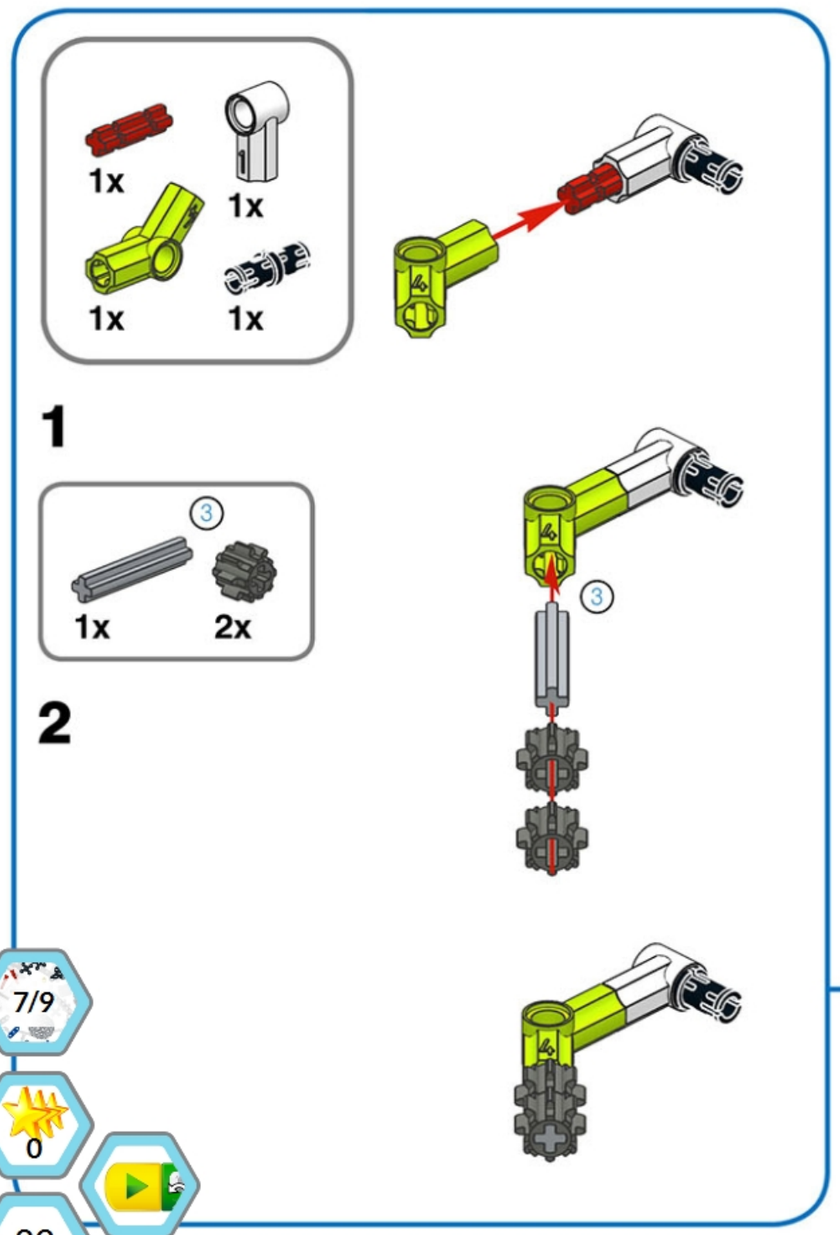
1x
1x
1x
1x
1
3
1x
2x
2
3
7/9
0
86

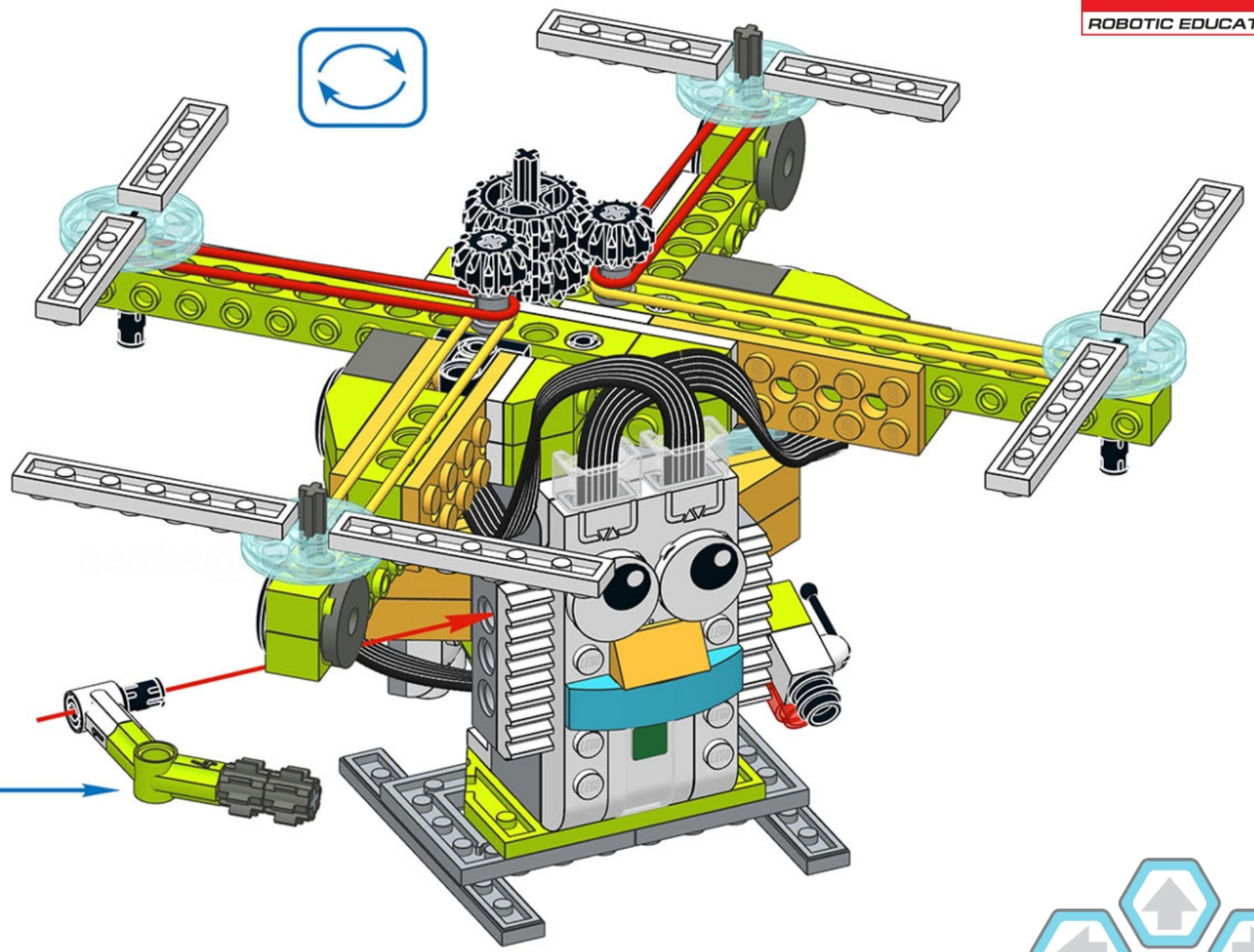
ROBORISE-IT!
ROBOTIC EDUCATION

ROBORISE-IT!
ROBOTIC EDUCATION

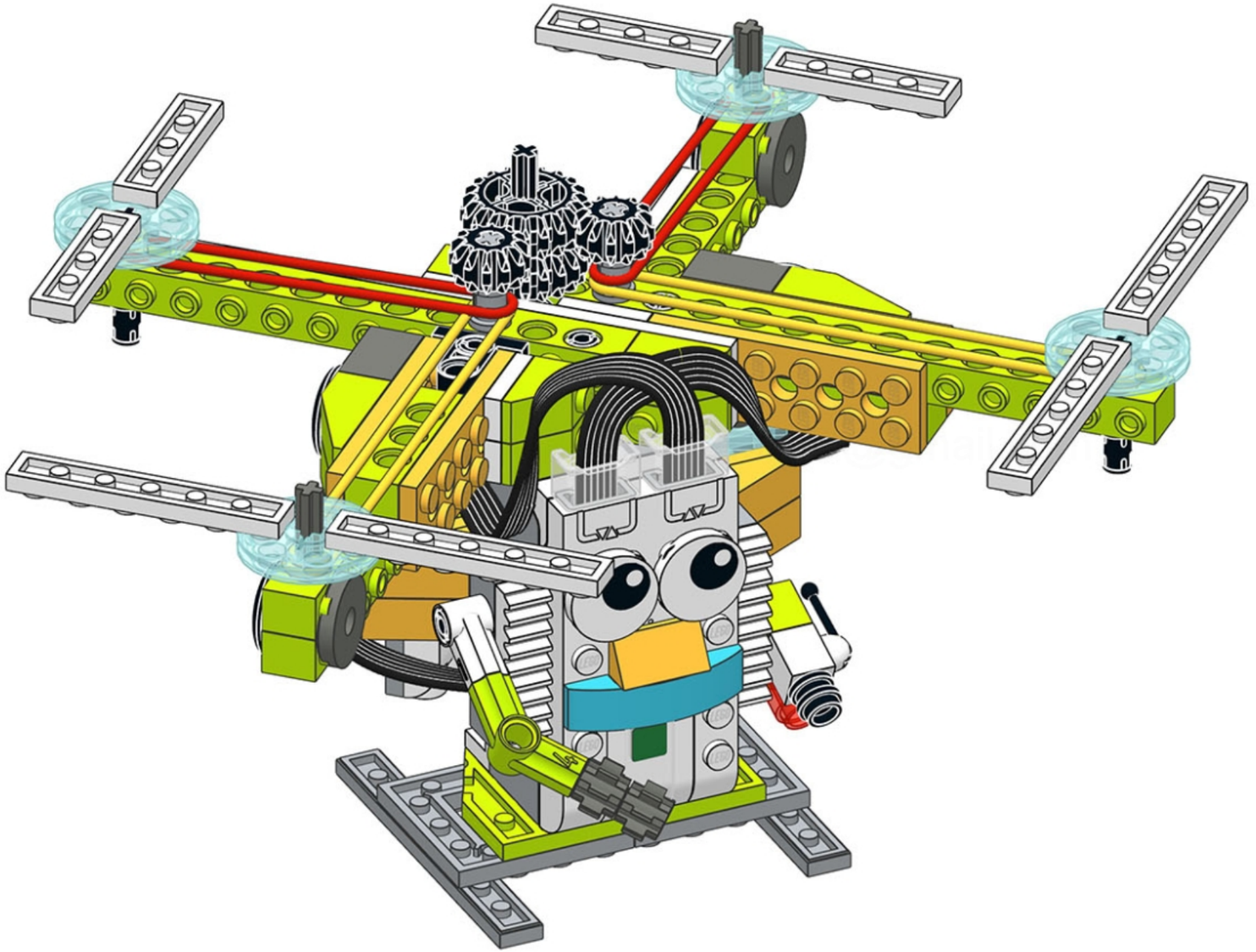

ROBORISE-IT!
ROBOTIC EDUCATION

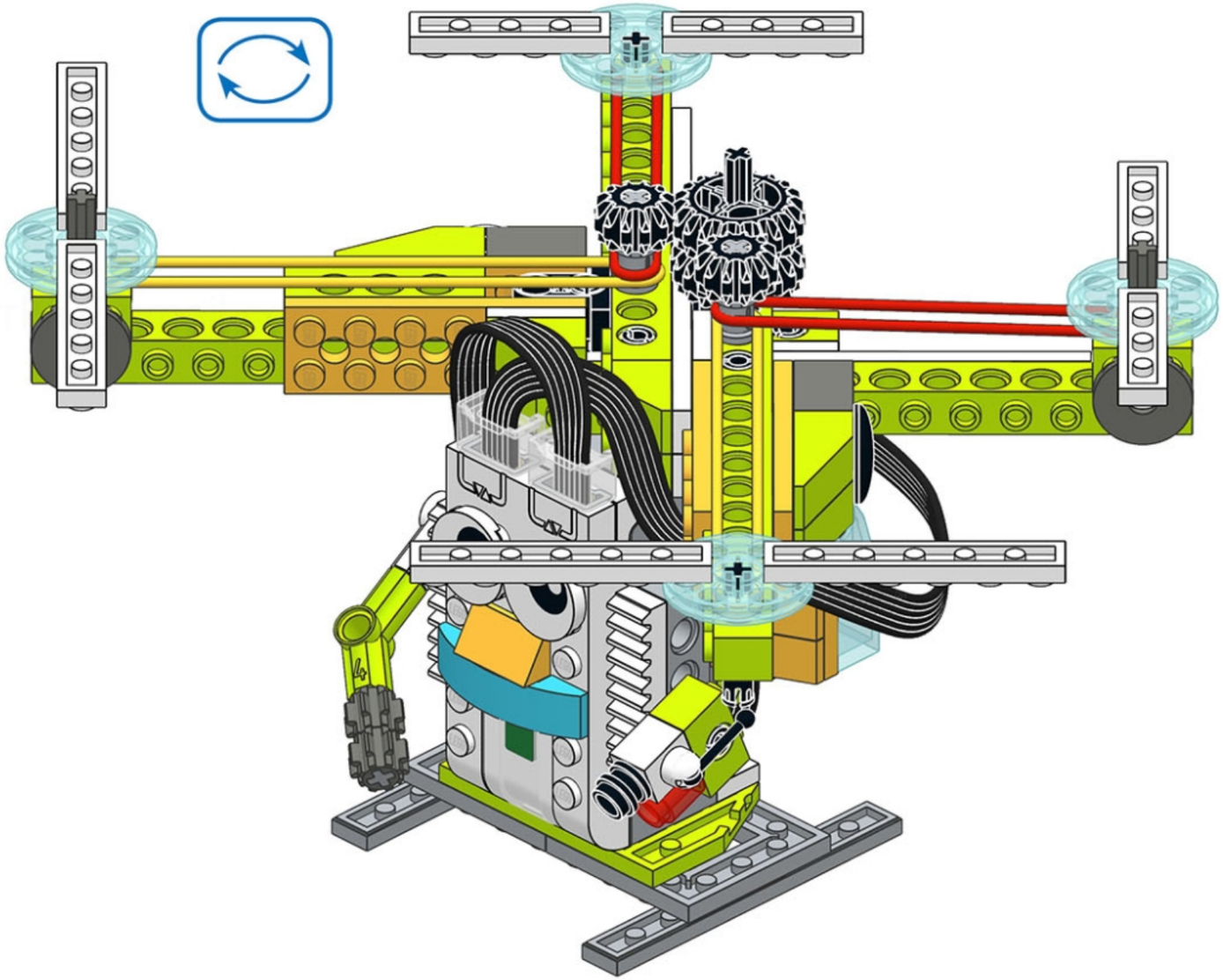

# Quadry

Quadry

ROBORISE-IT!
ROBOTIC EDUCATION

# New day at the robots` factory

ROBORISE-IT!
ROBOTIC EDUCATION

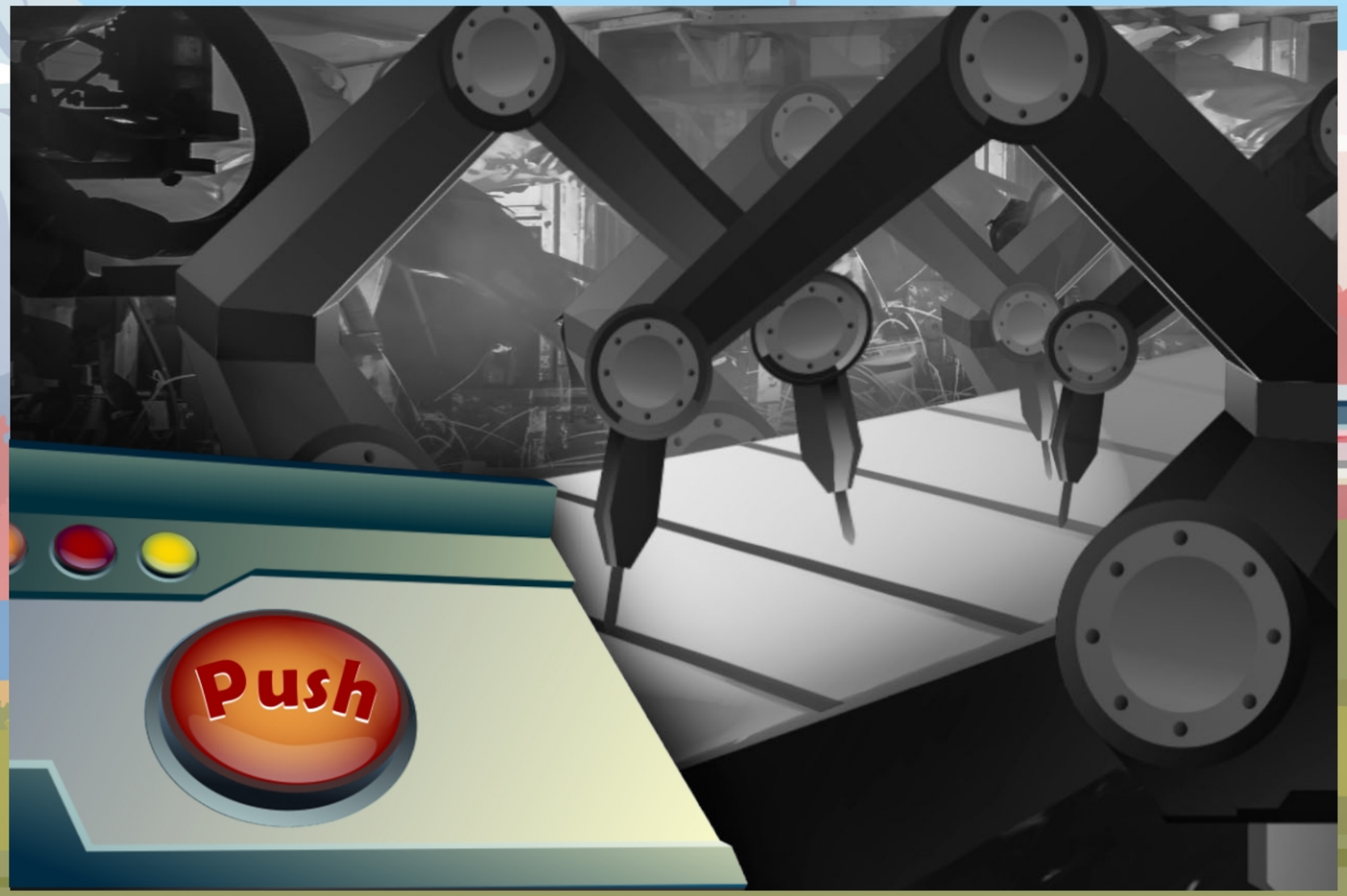


0

2

# New day at the robots` factory

ROBORISE-IT!
ROBOTIC EDUCATION

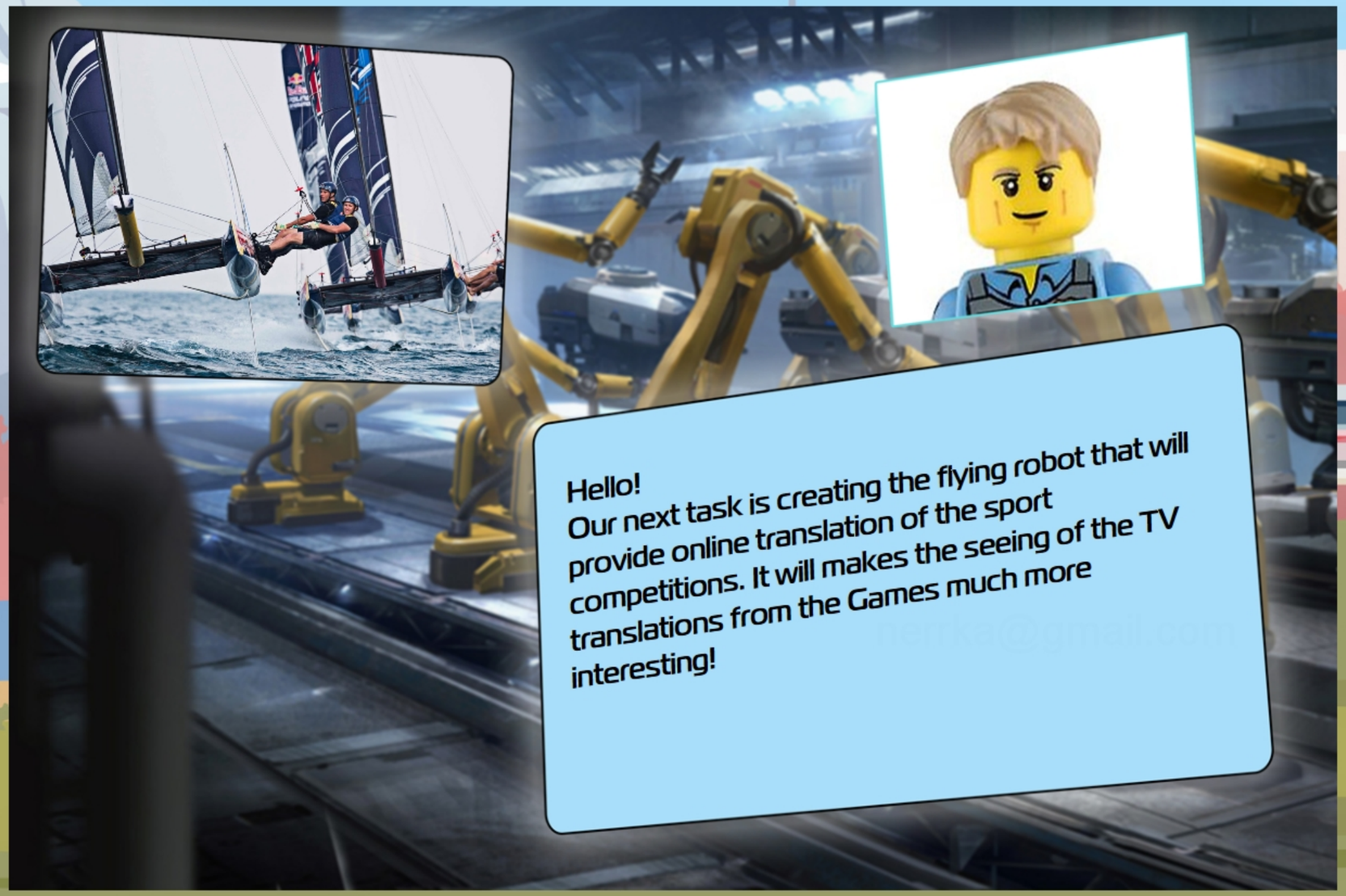


0

3

# TASK

ROBORISE-IT!
ROBOTIC EDUCATION

## TASK

- to develop the flying robot for providing the online translation of the competitions

## Steps

- to know more about the flying robots
- to define the main features of such robots
- to make the choice of the robot's design

0

4

# Discussion of the task

What do you know about the flying robots? How they are designed?

ROBORISE-IT!
ROBOTIC EDUCATION

nanka@gmail.com

# Flying robots

Flying robots may be build on the chassis of the plane, helicopter or quadcopter. Even the balloons are used (for the weather high-altitude balloons).

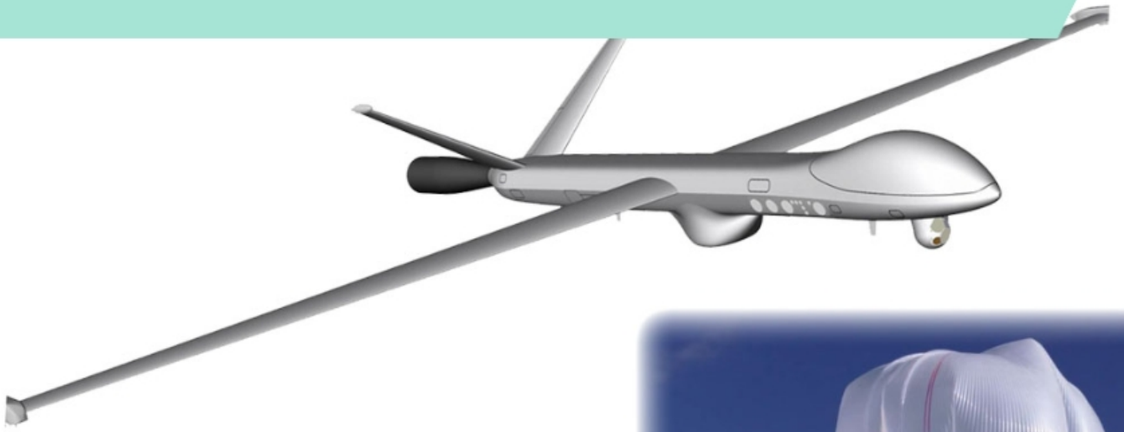

# Flying robots

The flying robots may has different design. It depends on the tasks that must be performed by the robot. Each of them has advantages and disadvantages for different purposes.

ROBORISE-IT!
ROBOTIC EDUCATION

# Helicopter drones

The helicopter drones usually not so small due to the complicated mechanics of the transmission and controlling. They may host a lot of load, but has a high fuel consumption.

ROBORISE-IT!
ROBOTIC EDUCATION

0

8

# Plane drones

The plane drones also has a complicated design, but much more effective. The main disadvantage is impossibility to hang in the air. Also big plane drones usually needs the runway for the landing and take off.

ROBORISE-IT!
ROBOTIC EDUCATION

0

9

# The convertible drones

This type of the drones combines the advantages of the first two types. They are affective due to the using the wings for the horizontal flying. And they can to hang in the air and not need the runway. But they very complex and expensive.

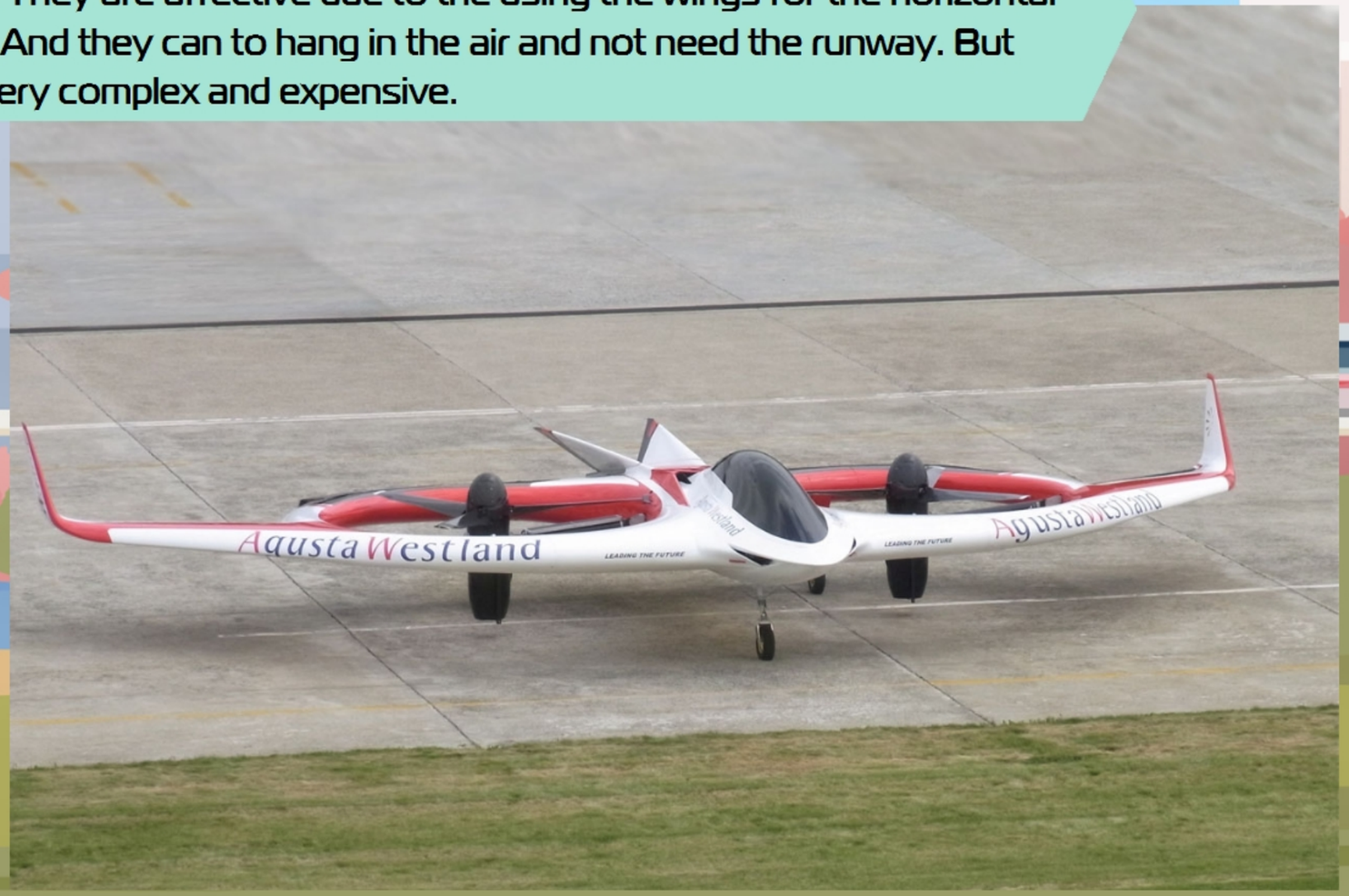


ROBORISE-IT!
ROBOTIC EDUCATION

0

10

# The Convertible drones

ROBORISE-IT!
ROBOTIC EDUCATION

This dron may to take off vertically and change the orientation of the wing in the fly! This allow not to use the runway and has all advantages of the plain-body drones.

0

11

# Question

Do you ever build the robots that can transform?

ROBORISE-IT!
ROBOTIC EDUCATION

0

12

# Quadcopter drones

ROBORISE-IT!
ROBOTIC EDUCATION

This drones still can't operate a long time, they are noisy, they are slowly than plane-body drones. But they are very easy to use, can hang in the air and has high maneuverability. The simple design and low prices makes such drones very popular.

0

13

# Octocopter drones

ROBORISE-IT!
ROBOTIC EDUCATION

It is a more powerful drones than the quadcopters. It can fly higher, move faster and carry heavier payloads than other drones. The octocopter obtained his name due to using the eight (octa in Greek) rotors. As you may guess the "quad" is a four in Greek.

0

14

# Flying taxi

ROBORISE-IT!
ROBOTIC EDUCATION

The unmanned flying taxi is becomes real. Such full-electric multirotor machines makes the dreams real!

How many propellers this machine has?

0

15

# Discussion of the task

How do you think, what type of the flying robot will be more suitable for using on the sport competition?

0

16

# Filming the sports

ROBORISE-IT!
ROBOTIC EDUCATION

A lot of crew are needed when the huge cameras are used for the filming. Often the helicopters are carry them all. This is gives a great quality of the video, but very expensive. Also helicopter can't be close to the object that is filmed.

0

17

# Filming the sports

ROBORISE-IT!
ROBOTIC EDUCATION

When the quadcopter is used, the only two humans needed. One of them is a pilot, and the cameraman is another. Such approach allows to obtain great videos.

0

18

# Attention!

ROBORISE-IT!
ROBOTIC EDUCATION

Flying a quadcopter is a lot of fun but you must not affect other people!

Remember the rules:

- Fly at or below 120 m (400 ft)
- Keep your drone within sight
- Never fly near other aircraft, especially near airports
- Never fly over groups of people
- Never fly over stadiums or sports events
- Never fly near emergency response efforts such as fires

# Quadcopters

ROBORISE-IT!
ROBOTIC EDUCATION

Such drones also may be used for filming the owner due to the tracking all him movements.

0

20

# Let's summaries

We must create the flying robot that:

- May be easily used for the filming the sport
- May hang in the air
- Be not expensive

ROBORISE-IT!
ROBOTIC EDUCATION

# Meet Quadry!

Quadry

This is the quadcopter drone with stabilised camera.

# Quadcopter's elements

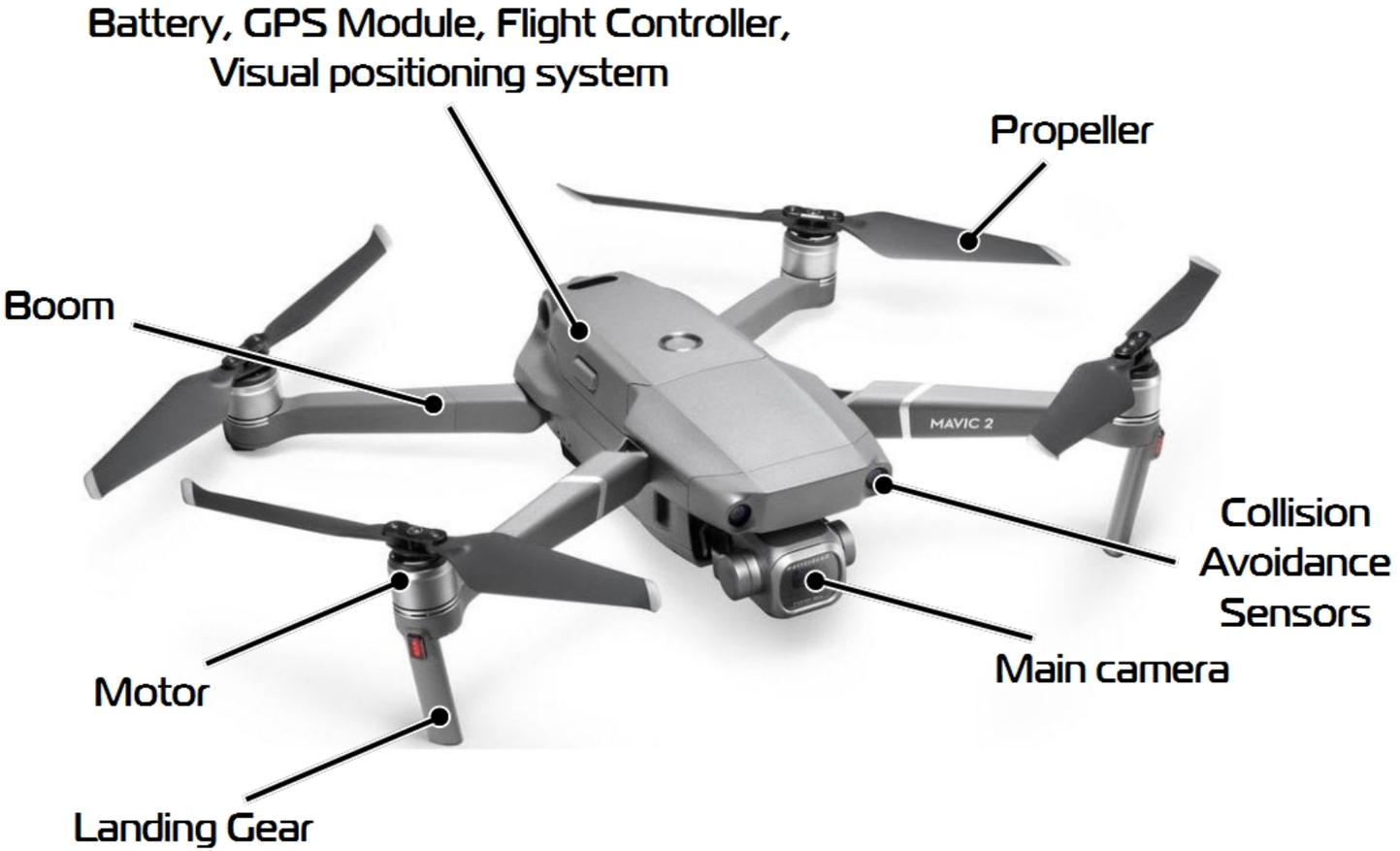

# Features

ROBORISE-IT!
ROBOTIC EDUCATION

The one motor is used for drive all four propellers. The Motion sensor may be used for maintaining the height and ground detection.

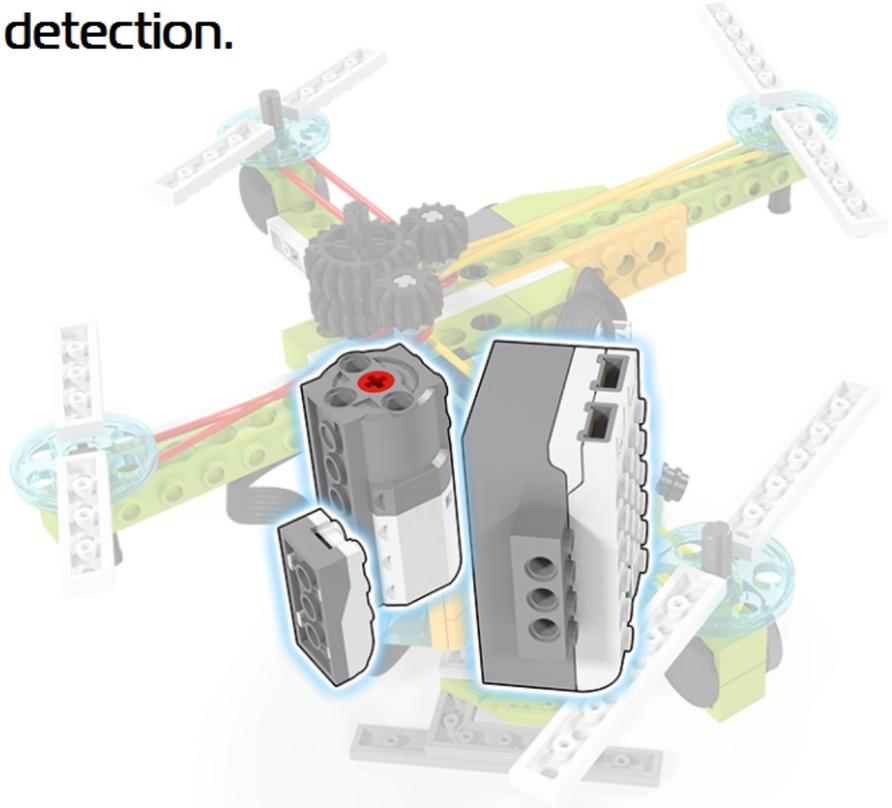

Find:

- smarthub
- motor
- sensor

0

24

# Features

The transmission consist of 20- and 12-tooth gears. It increase the rotation speed in 1.7 times.

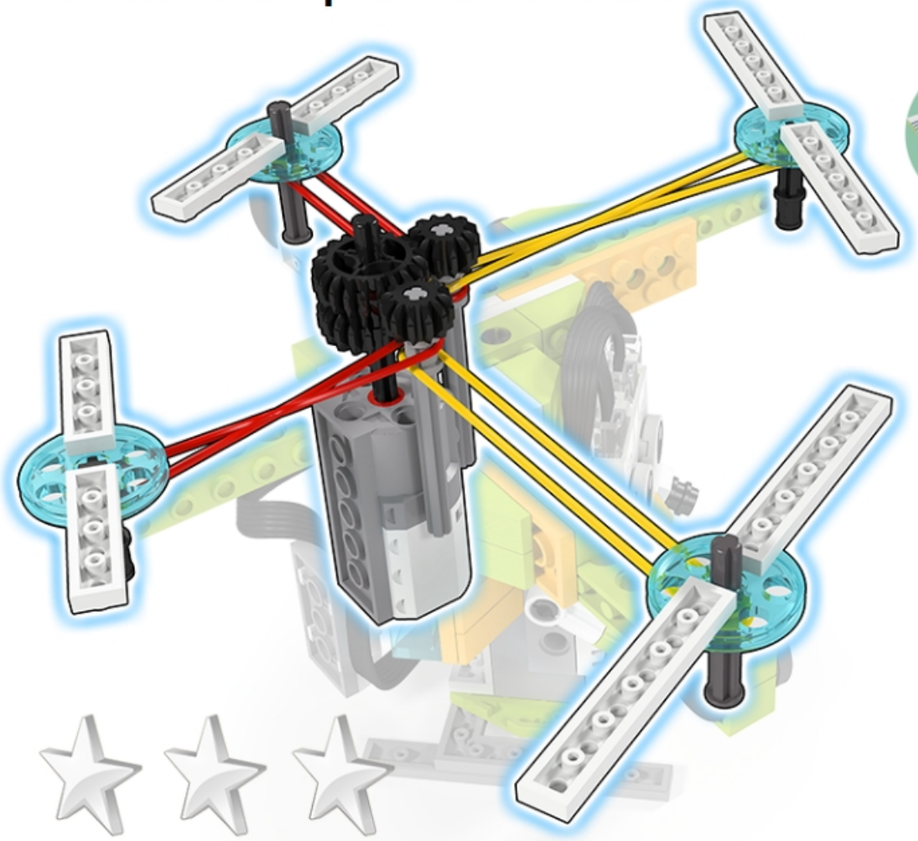

Find:

- Gears
- Belt drive
- Propellers

# Features

The rotation is transmits from the one main axle to the two support axles and via Belt drive to the propellers.

ROBORISE-IT!
ROBOTIC EDUCATION

0

26

# Build the robot!

ROBORISE-IT!
ROBOTIC EDUCATION

0

27

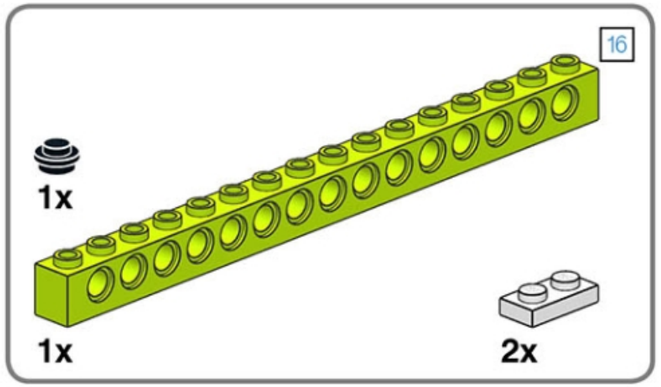


# 1

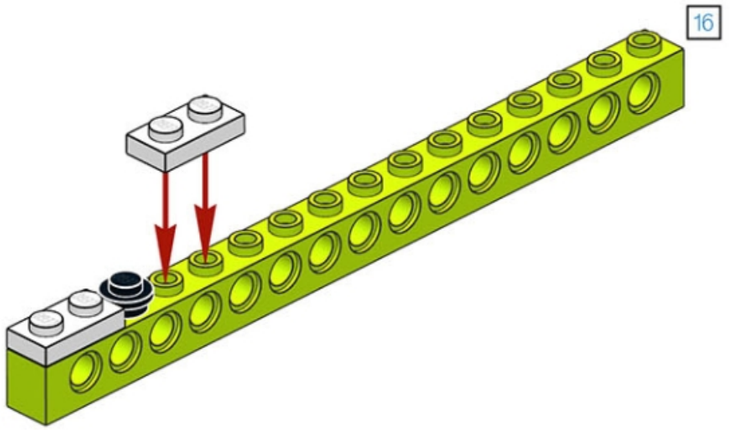


ROBORISE-IT!
ROBOTIC EDUCATION

nenka@gmail.com

# Enhanced version

ROBORISE-IT!
ROBOTIC EDUCATION

Add the stabilised hand and the camera to your robot!

0

79

nerka@gmail.com

ROBORISE-IT!
ROBOTIC EDUCATION

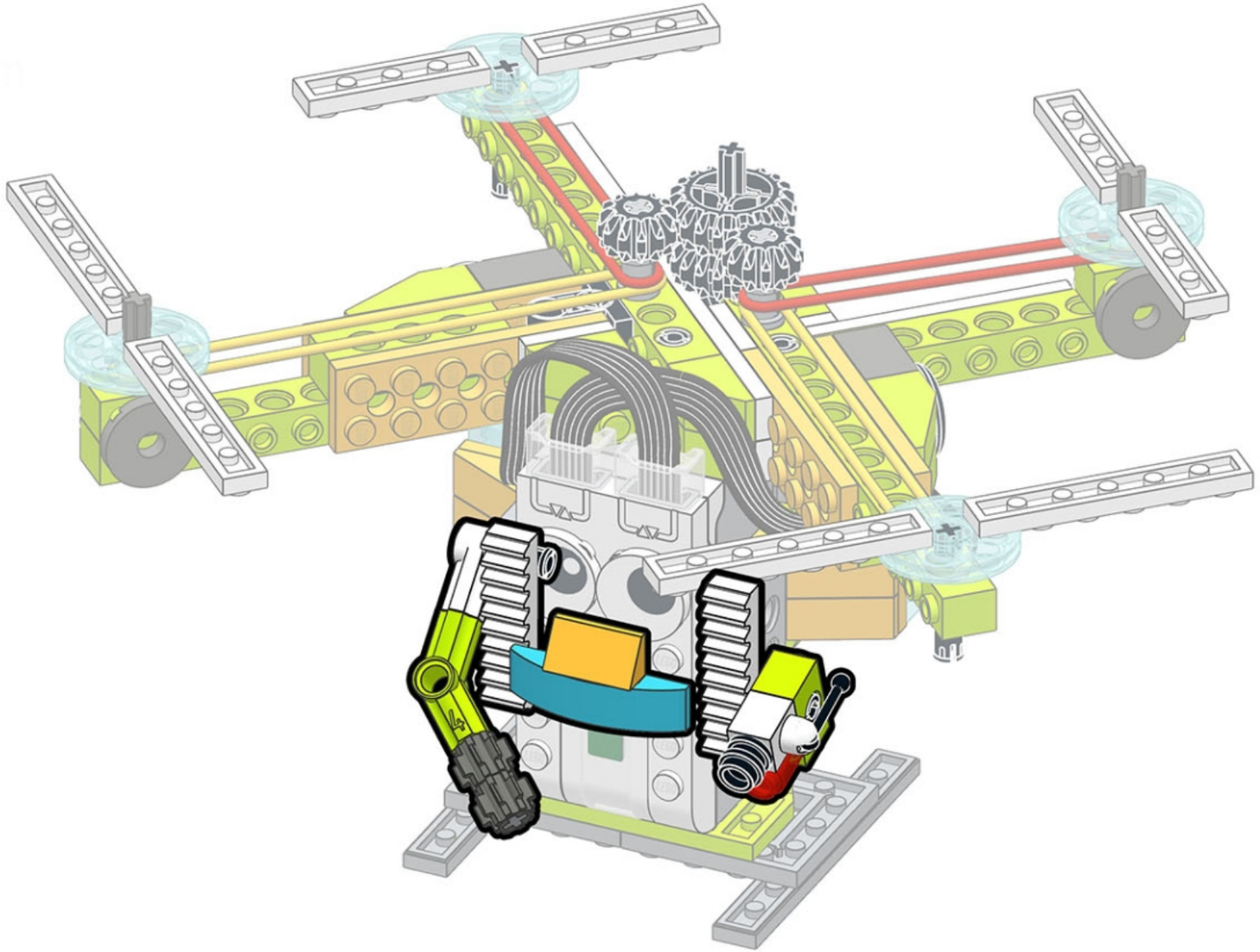

1/9

0

80

# Check it out!

ROBORISE-IT!
ROBOTIC EDUCATION

Avoid any friction between the cables while robot is moving.



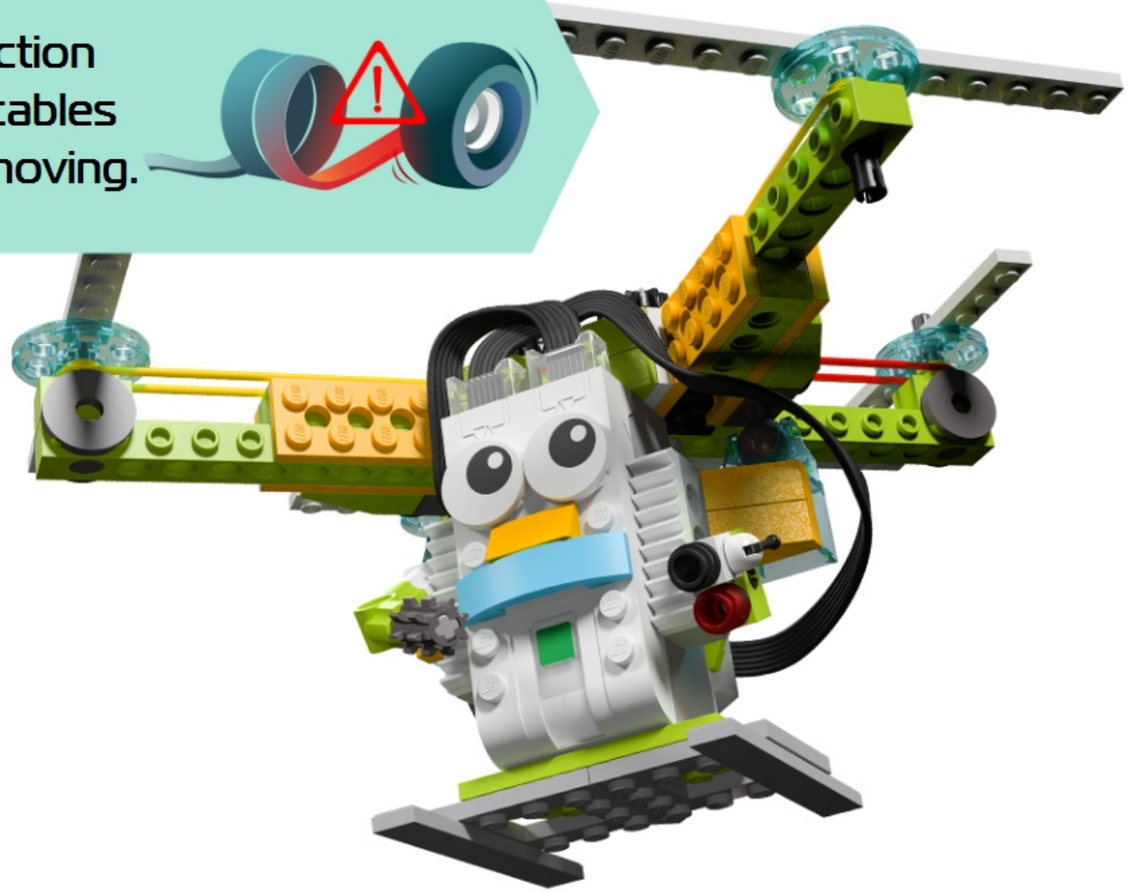

# TASK

ROBORISE-IT!
ROBOTIC EDUCATION

Place parts of the robot in the right places.

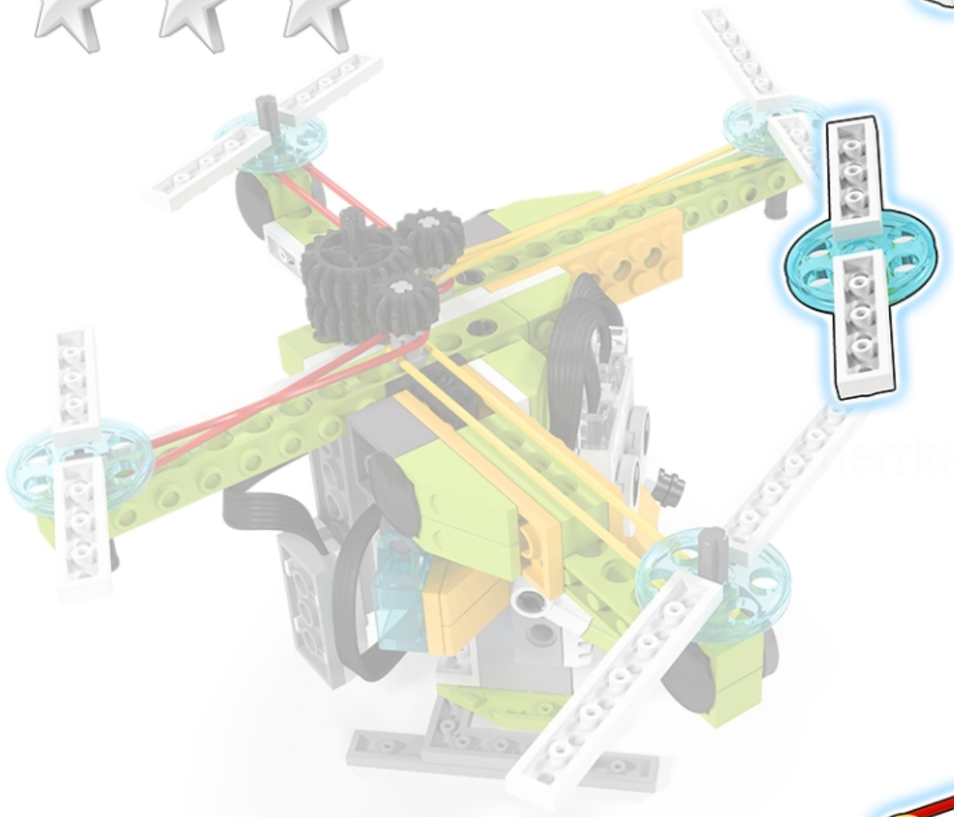

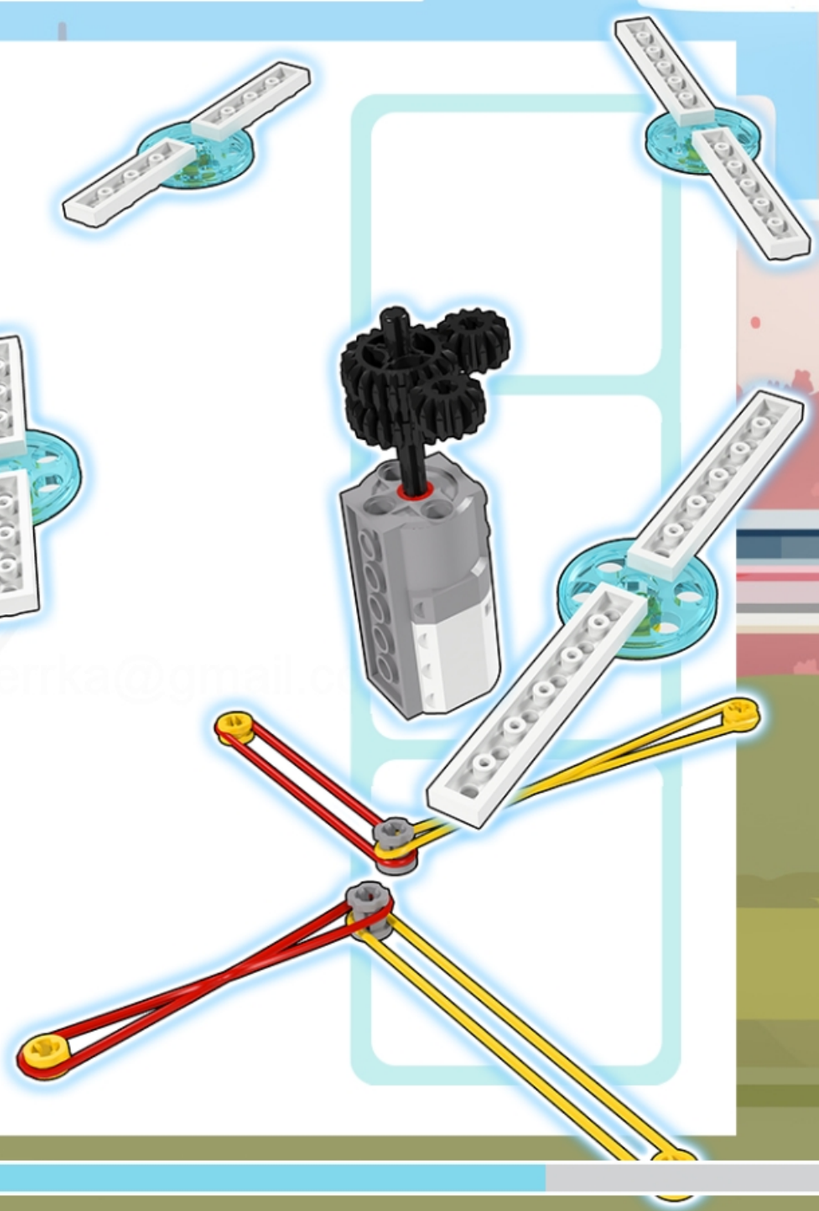

0

90

# Task 1

ROBORISE-IT!
ROBOTIC EDUCATION

Check the mechanism. The propellers must to spin smoothly and don't touch any other parts of the robot.

0

91

# Direction of the rotation

Check the props directions. The Quadcopter for successfull operation needs the following directions of propeller rotations:

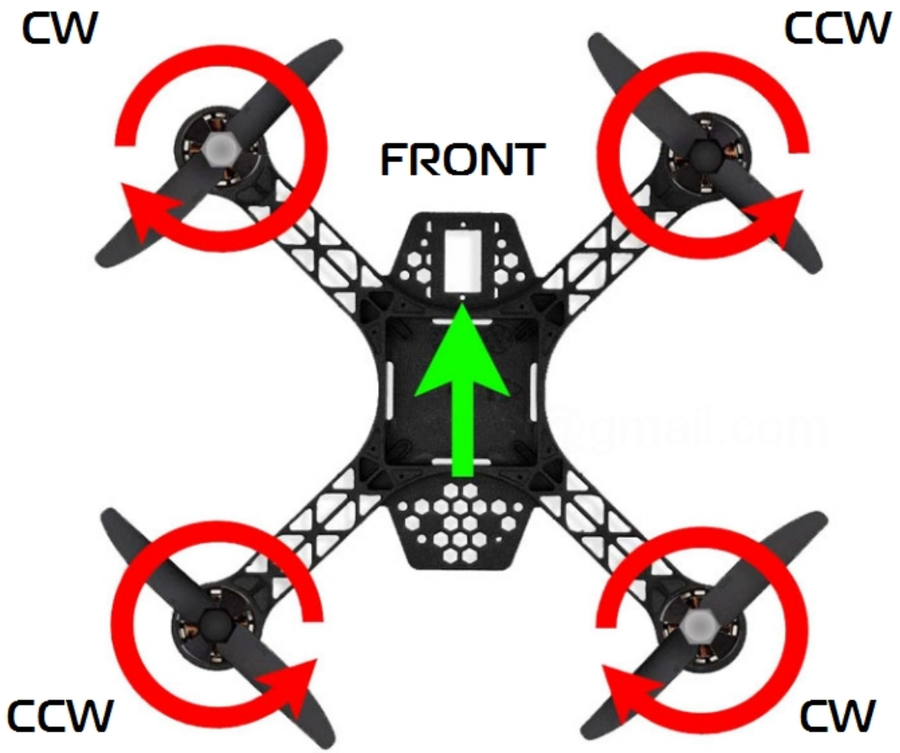


ROBORISE-IT!
ROBOTIC EDUCATION

# Task 2

ROBORISE-IT!
ROBOTIC EDUCATION

Look closer to the design of the transmission and make the changes that will makes the directions of the propellers' rotation the correct.

0

93

# Task 3

ROBORISE-IT!
ROBOTIC EDUCATION

Due to the safety rules the drone must has the lights for easy to recognising it in the sky. Program the flashing of the red lamp.

0

94

# Task 4*

ROBORISE-IT!
ROBOTIC EDUCATION

To decrease the load on the mechanisms usually the smooth speed increasing is used. Program such start of the motor.

roboriseit.com

0

95

# Speed and Thrust

ROBORISE-IT!
ROBOTIC EDUCATION

Unlike helicopters, the thrust of the propellers of quadrocopter depends from propellers' rotation speed. While the speed of rotation is not very high, the Thrust increases with the increasing of the rotation speed.

If the rotation speed is high, the drone takes off.

At some medium speed the drone may to hang in the air.

If the rotation speed is low, the drone go down.

norika@gmail.com

# Task 5

ROBORISE-IT!
ROBOTIC EDUCATION

Program the robot for maintaining the height. To do this the correspondence between the Motor speed and the Motion sensor data must be programmed. At the low altitude motor must increase the speed and at the high altitude it must decreaese the speed.

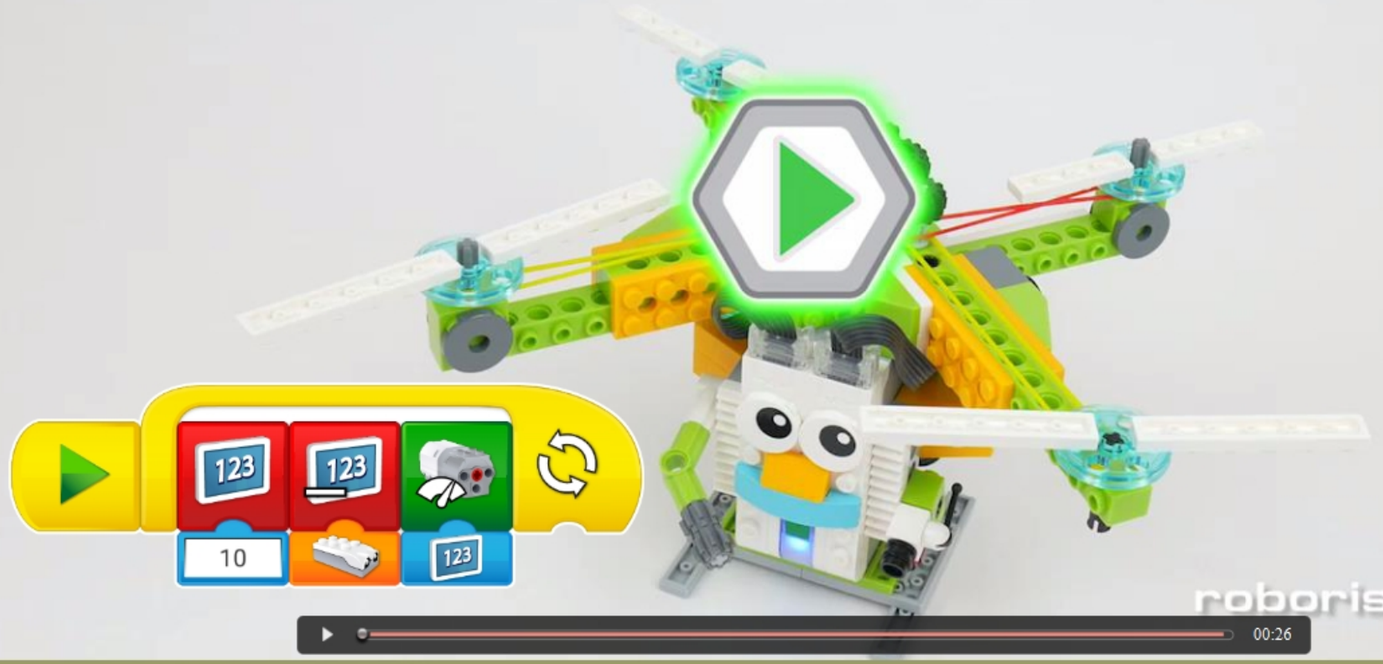


0

97

# Discuss the task!

What math operation may help to invert the Motion sensor data for translate them to the motor?

# Task 5. Algorithm

The program should run by the following algorithm:

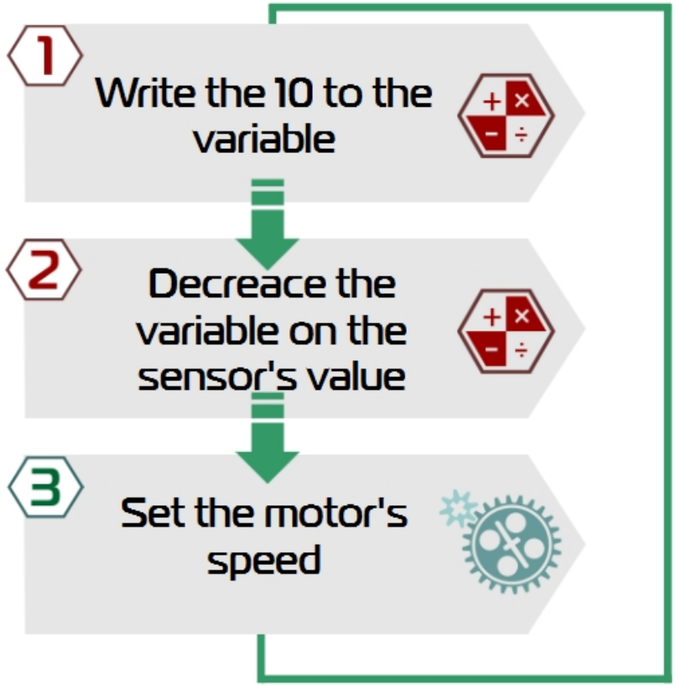


ROBORISE-IT!
ROBOTIC EDUCATION

# Task 5. Algorithm

The program should run by the following algorithm:

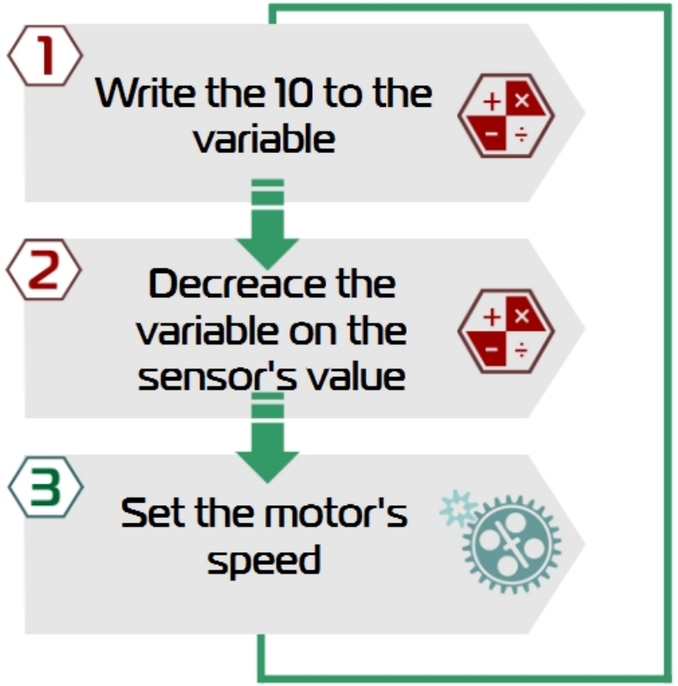


ROBORISE-IT!
ROBOTIC EDUCATION

# Task 6

ROBORISE-IT!
ROBOTIC EDUCATION

Improve your program! Add the sound alert about the low altitude and add the special sound for the drone crash (when altitude is zero).

0

100

# Task 6. Program

ROBORISE-IT!
ROBOTIC EDUCATION

One of the possible solutions is shown below. At the each loop iteration the message with the sensor data is sent. If the altitude is low (0, 1 or 2) the corresponding sound is played.

# Question

How do you think, why drones usually has 4 propellers but not 1 or 2?

ROBORISE-IT!
ROBOTIC EDUCATION

0

102

# TASK

Arrange this fluing machines by the speed.

0

103

# Discuss!

- How to film the sport?
- What advantages the quadcopter has?
- How the Motion sensor used in the robot?

ROBORISE-IT!
ROBOTIC EDUCATION

0

# Your achievements

ROBORISE-IT!
ROBOTIC EDUCATION

Total count: 0

1

2

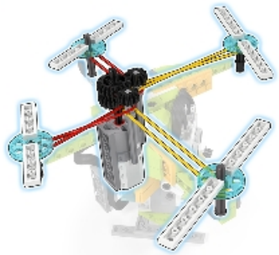

3

4

0

105

# Mission complete!

ROBORISE-IT!
ROBOTIC EDUCATION

0

106