Meganeura

关注公众号获取更多

Meganeura

Let`s remind. Parasaurolophus

关注公众号获取更多

Place parts of the robot on the right places

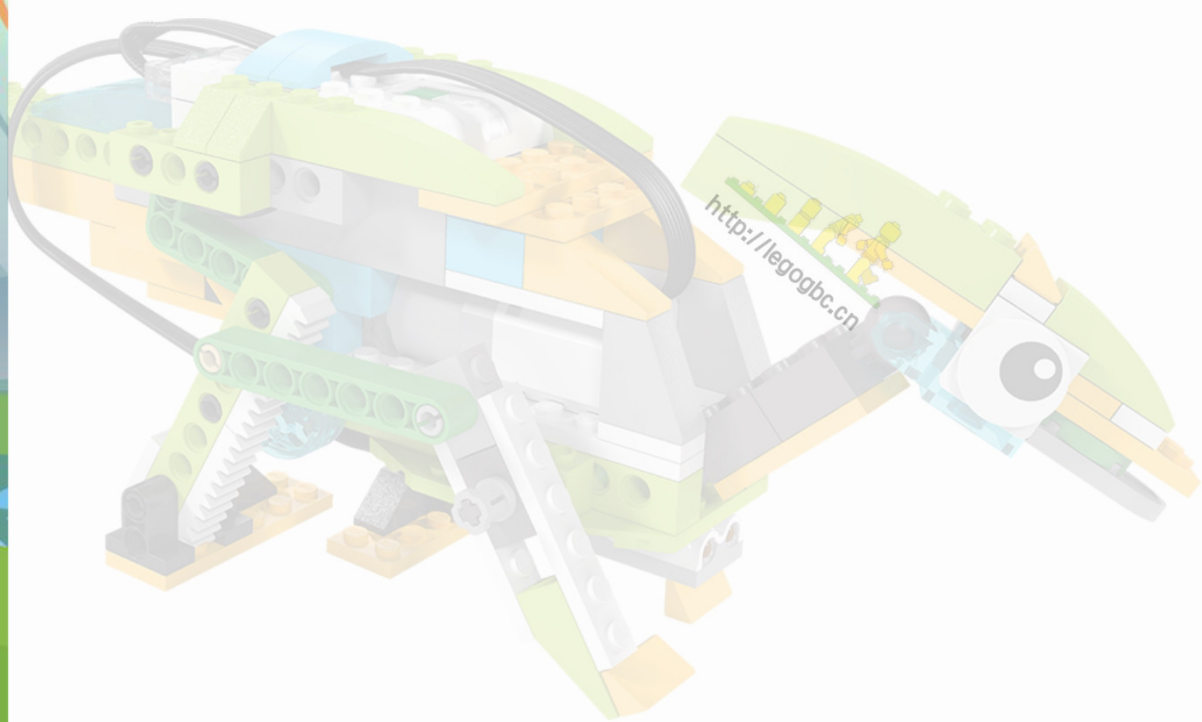

Let`s remind. Parasaurolophus

关注公众号获取更多

Place parts of the robot on the right places

http://legogbc.cn

Let`s remind. Parasaurolophus

关注公众号获取更多

How could Parasaurolophus use its bone crest on the head?

To get food

To protect against predators

To create loud sound

Dino Park

关注公众号获取更多

Today we continue to create a modern Dino Park. We have to create a robot for exposition of the Paleozoic era Carboniferous period.

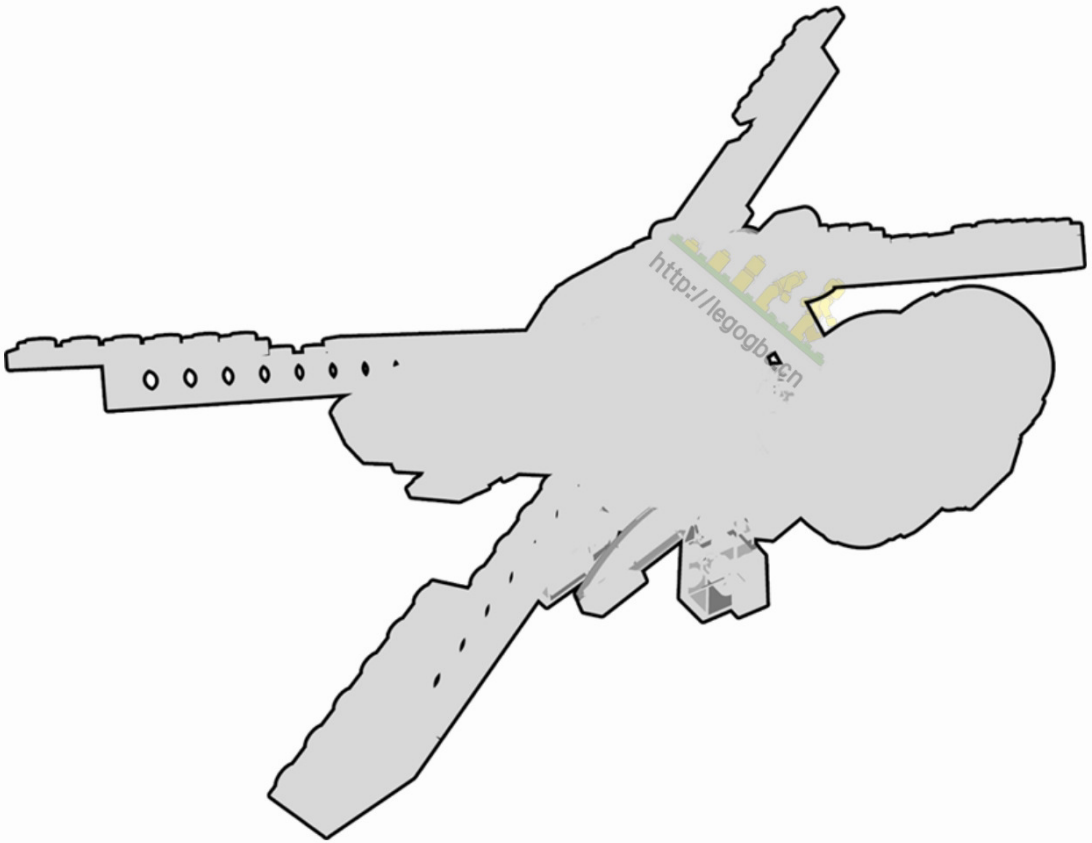

Dino Park

关注公众号获取更多

In the Carboniferous period is flourishing of insects and amphibians. On a dry land, spore plants grew - horsetails, ferns and mosses. Only at the end of the period appear the first reptiles.

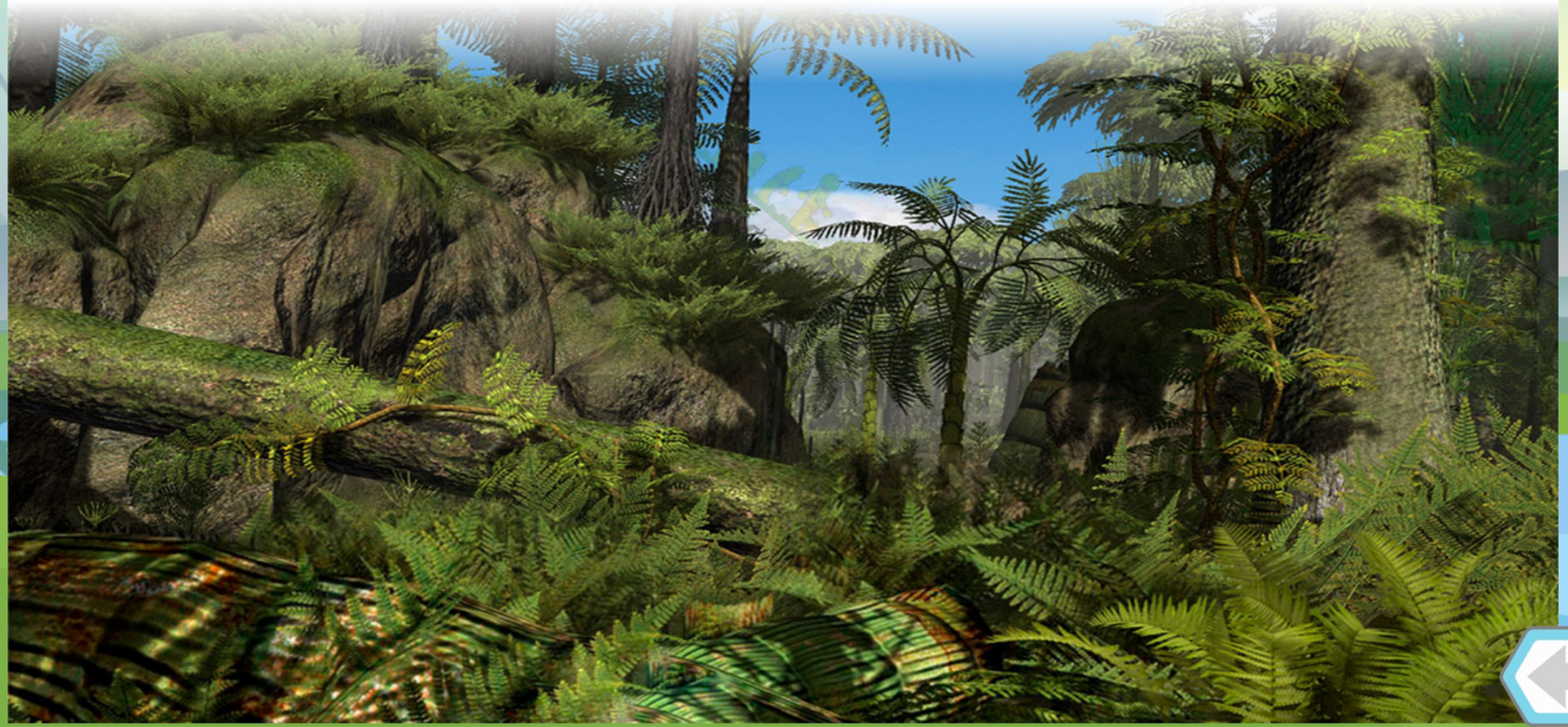

Discussion of the task

关注公众号获取更多

What do you know about the insects that inhabited Earth in the Paleozoic era?

Insects Paleozoic

The first insects appeared long before the dinosaurs in the Paleozoic era. At first they were quite small and inhabited only the surface. Later they developed their wings. In those days, air was inhabited only by them.

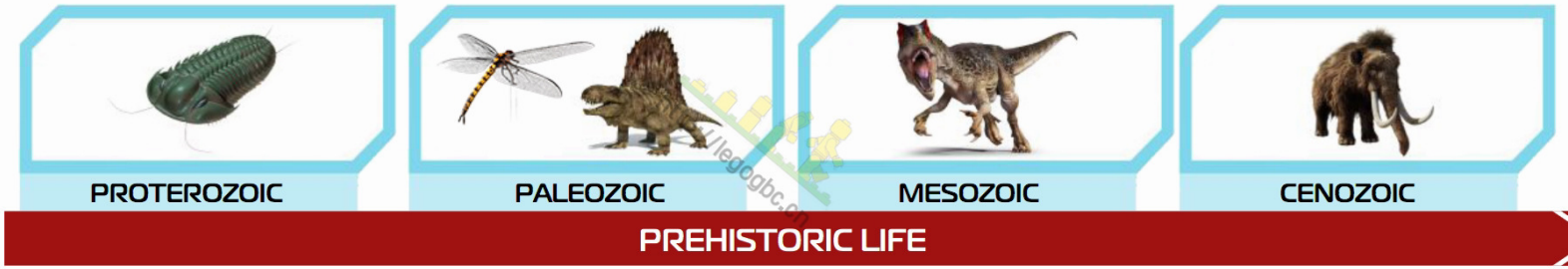

Insects have appeared many years ago, but now they make up three quarters of all living beings on Earth.

Insects Paleozoic

关注公众号获取更多

Fossil remains indicate that the insects of the Paleozoic era had enormous proportions. Scientists believe that this was possible thanks to the greater concentration of oxygen in the atmosphere than it is now.

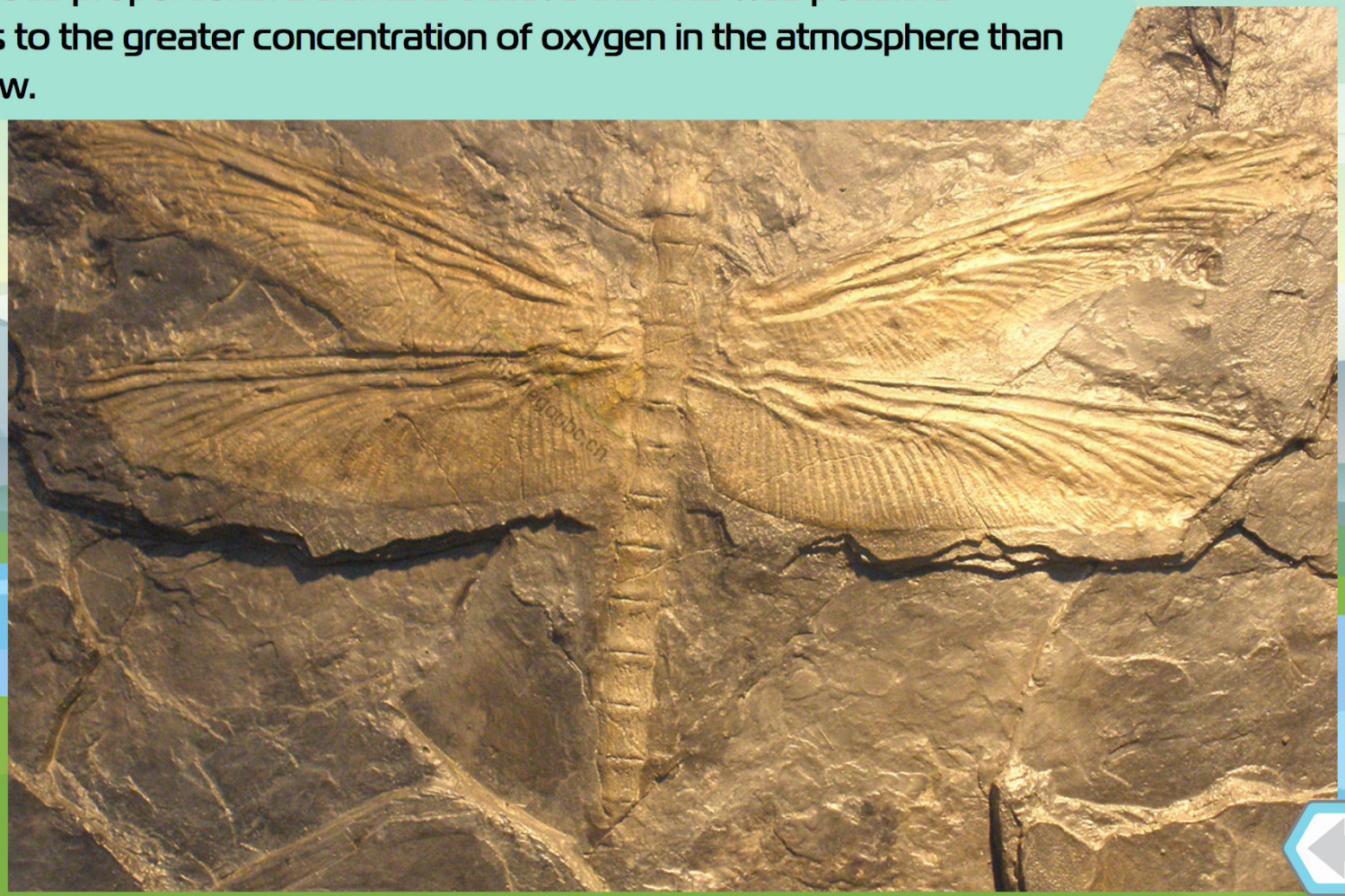

Insects Paleozoic

关注公众号获取更多

Meganeura, the imprint of which you saw on the previous slide,had size to 75 cm and was a dangerous predator. It hunted on other insects that inhabited the air.

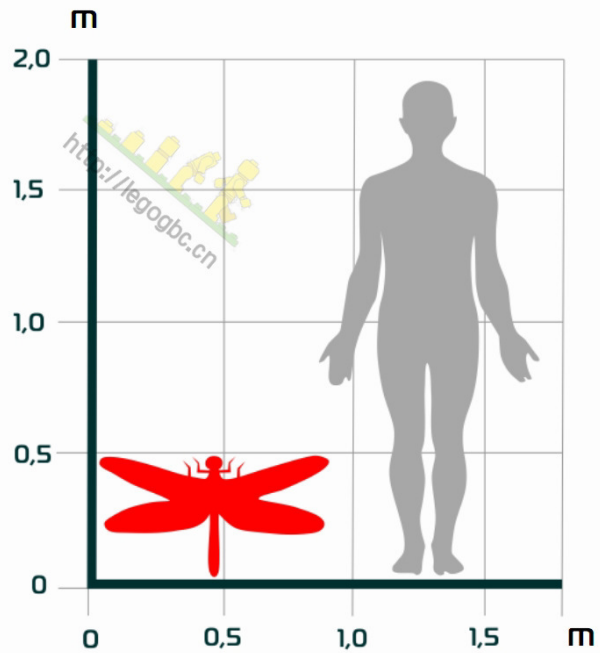

Meganeura

This insect was similar to a modern dragonflies, but it is not its ancestor. Modern dragonflies have appeared much later and are not connected with Meganeuras.

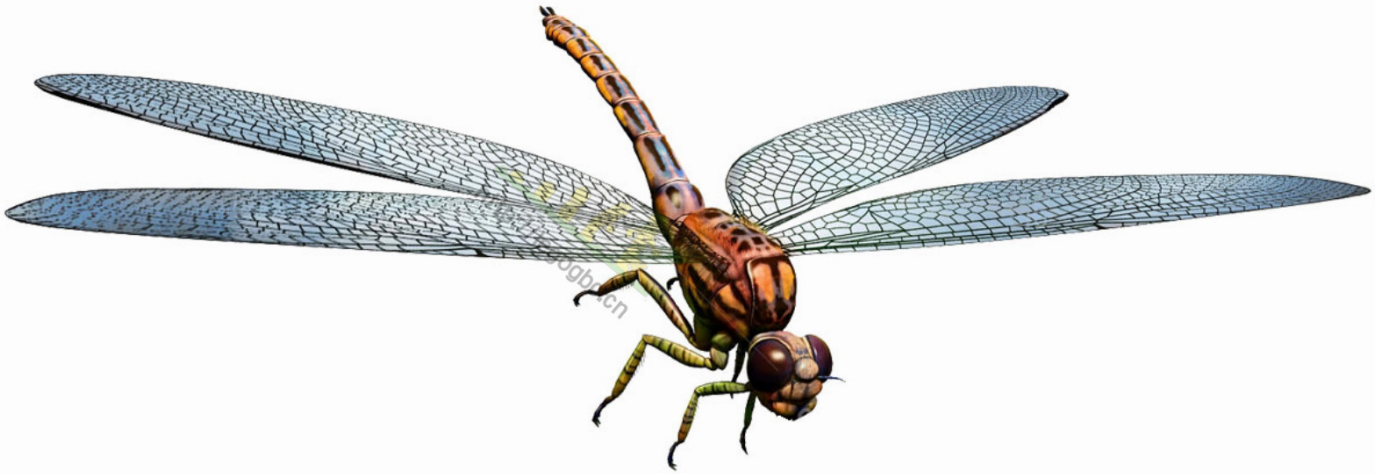

关注公众号获取更多

Meganeura

Unlike modern dragonflies, Meganeuras had stronger legs and a simpler pattern of veins on the wings. They flew very quickly, caught and ate prey in the air.

关注公众号获取更多

Meganeuras

Meganeurs hunted on other insects of the Carboniferous period. Their fossil remains are found in the territory of modern Europe.

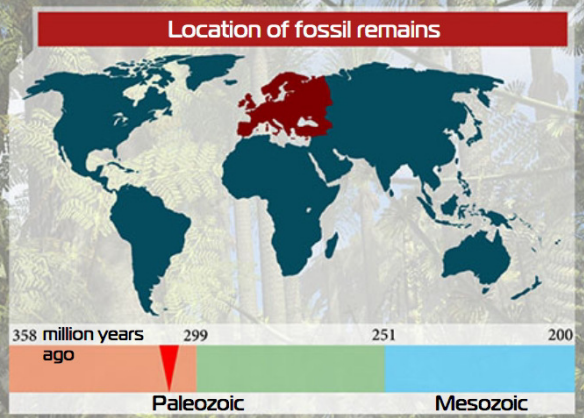

关注公众号获取更多

Dino Park

关注公众号获取更多

Today we are moving to creating an exposition of prehistoric insects. In the Carboniferous period, they grew to enormous sizes, so visitors of the park would be interested to watch them.

What features of Earth at that time made it possible to develop huge insects?

TASK

关注公众号获取更多

Task

- create an insect robot for exposition of the Carboniferous period

Requirements

- should be similar to the insect of the Perm period - Meganeura
- the movement of the robot`s wings must repeat the movement of the wings of real insect

Meganeura`s appearance

Design features

关注公众号获取更多

Meganeura uses a motor to drive all four wings. Additional sensors are conveniently attached to the back of the robot. It is quite durable and suitable for carrying it.

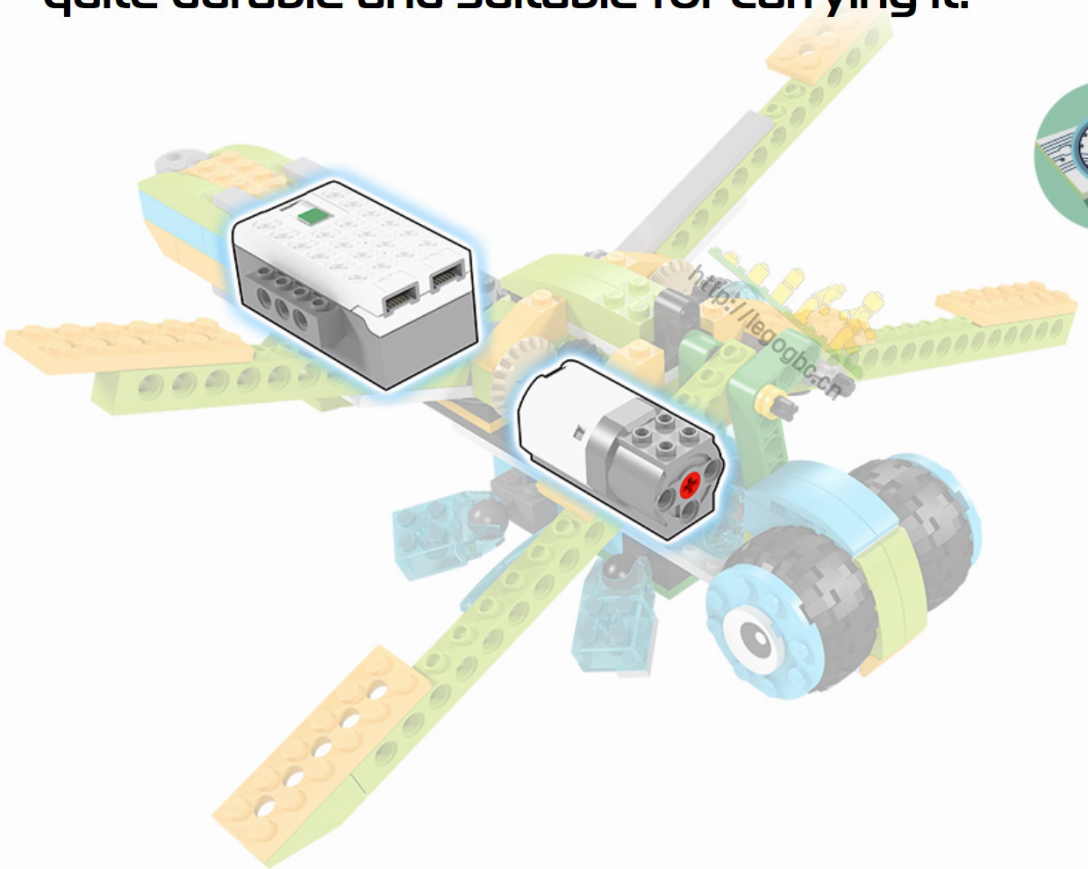

Find:

- smarthub
- motor

Design features

When carrying the robot it is best to keep it behind the tail. It is strong enough. In addition, in such a position, the motion of the wings does not interfere with keeping the robot.

关注公众号获取更多

Design features

关注公众号获取更多

The crank converts the axis rotation of the motor into translational motion. The beam transmits the force on the right front wing, and from it the movement is transmitted to other wings through the system of axles and angular gears.

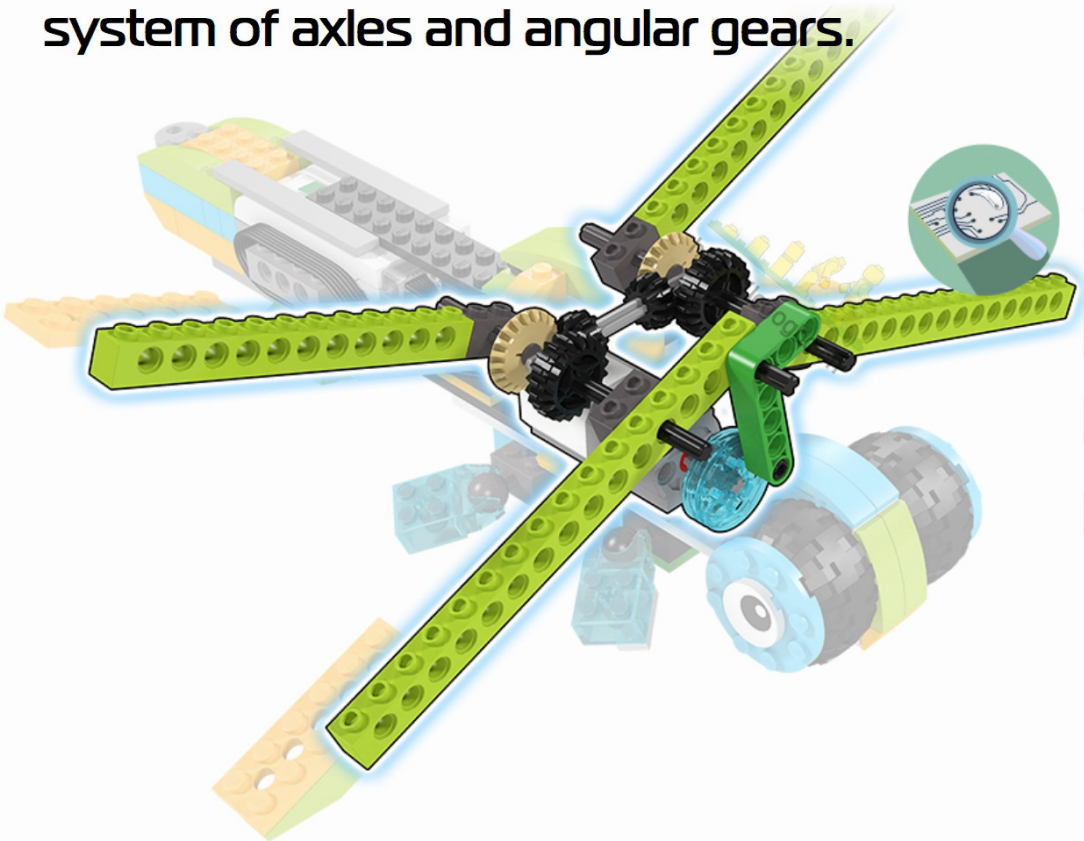

Find:

- crank
- moving beam
- right front wing

Design features

Follow the transformation and transmission of motion in the wings drive. Thanks to the crank it was possible to realize the wingspan without changing the direction of rotation of the motor.

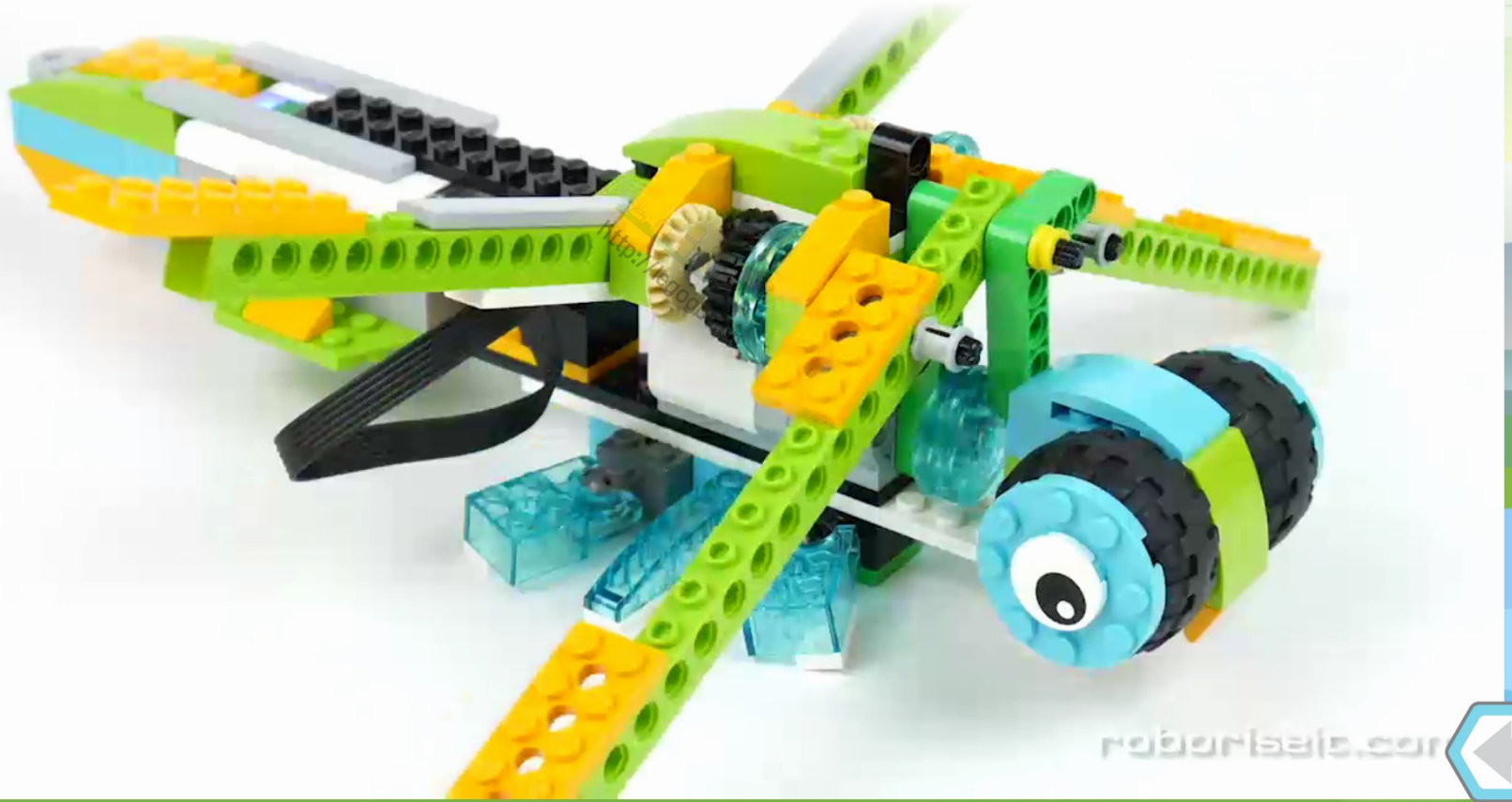

关注公众号获取更多

Design features

Follow the transformation and transmission of motion in the wings drive. Thanks to the crank it was possible to realize the wingspan without changing the direction of rotation of the motor.

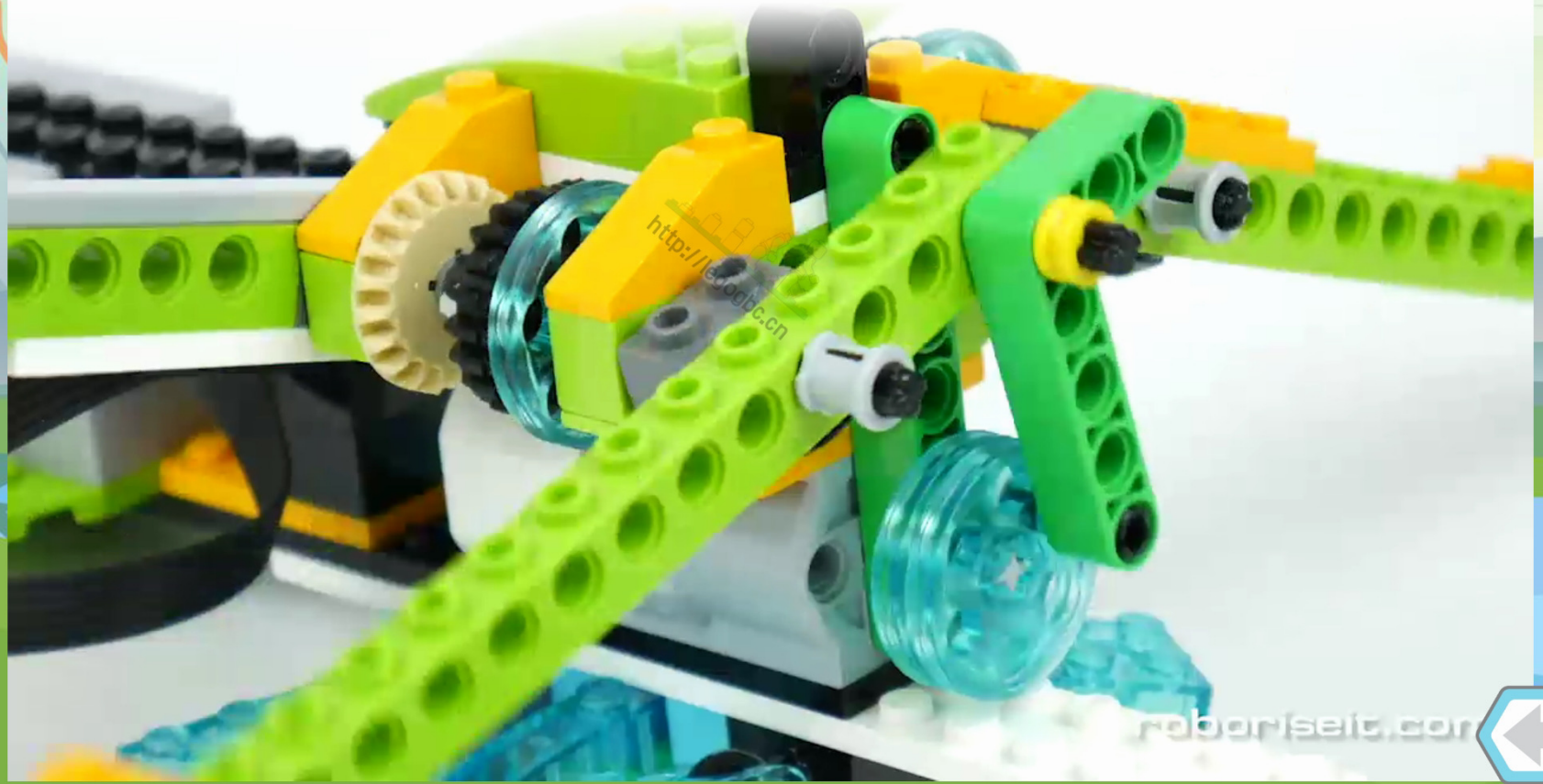

关注公众号获取更多

Design features

关注公众号获取更多

Pay attention! The motion of the wings is mechanically synchronized. Due to this, when one pair of wings moves up, the other moves down, and vice versa.

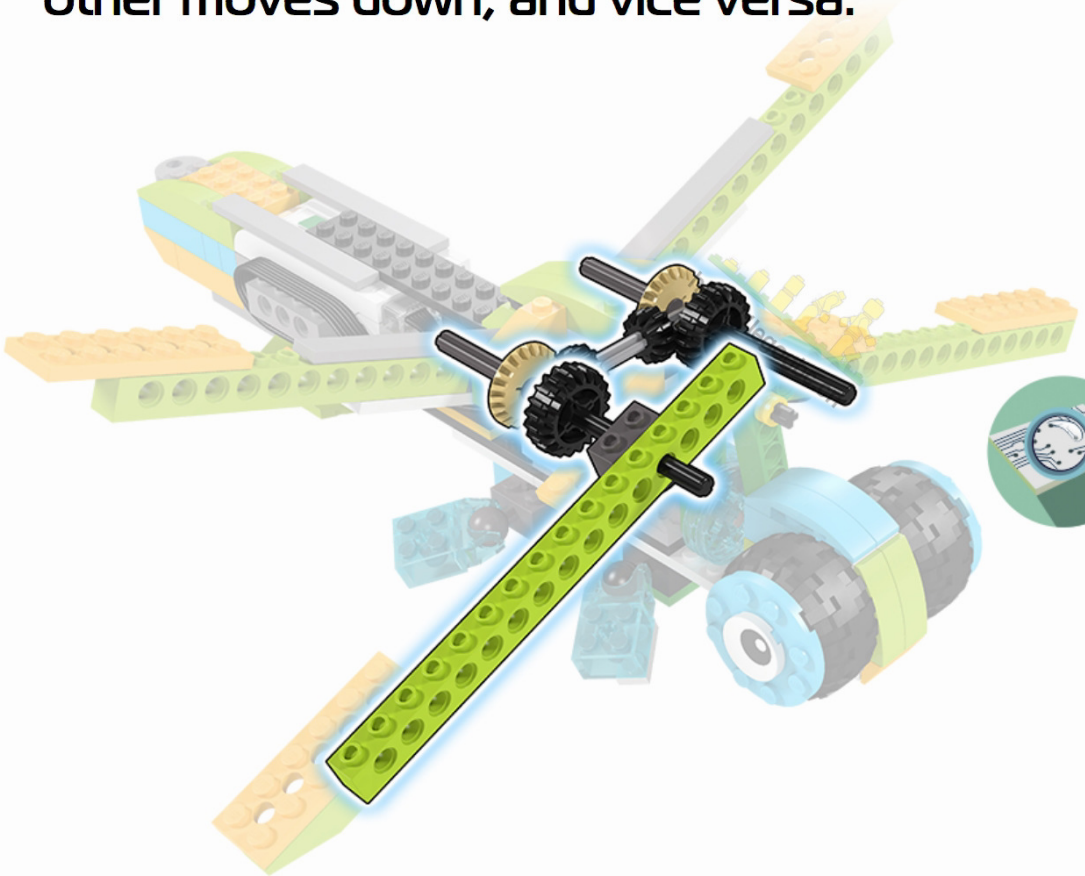

Find:

- drive gear
- synchronized driven gears

Design features

The drive from the motor is transmit to the front left wing. From it through the system of gears the rotation is transferred to the other three wings.
What from your earlier built, reminds you such move?

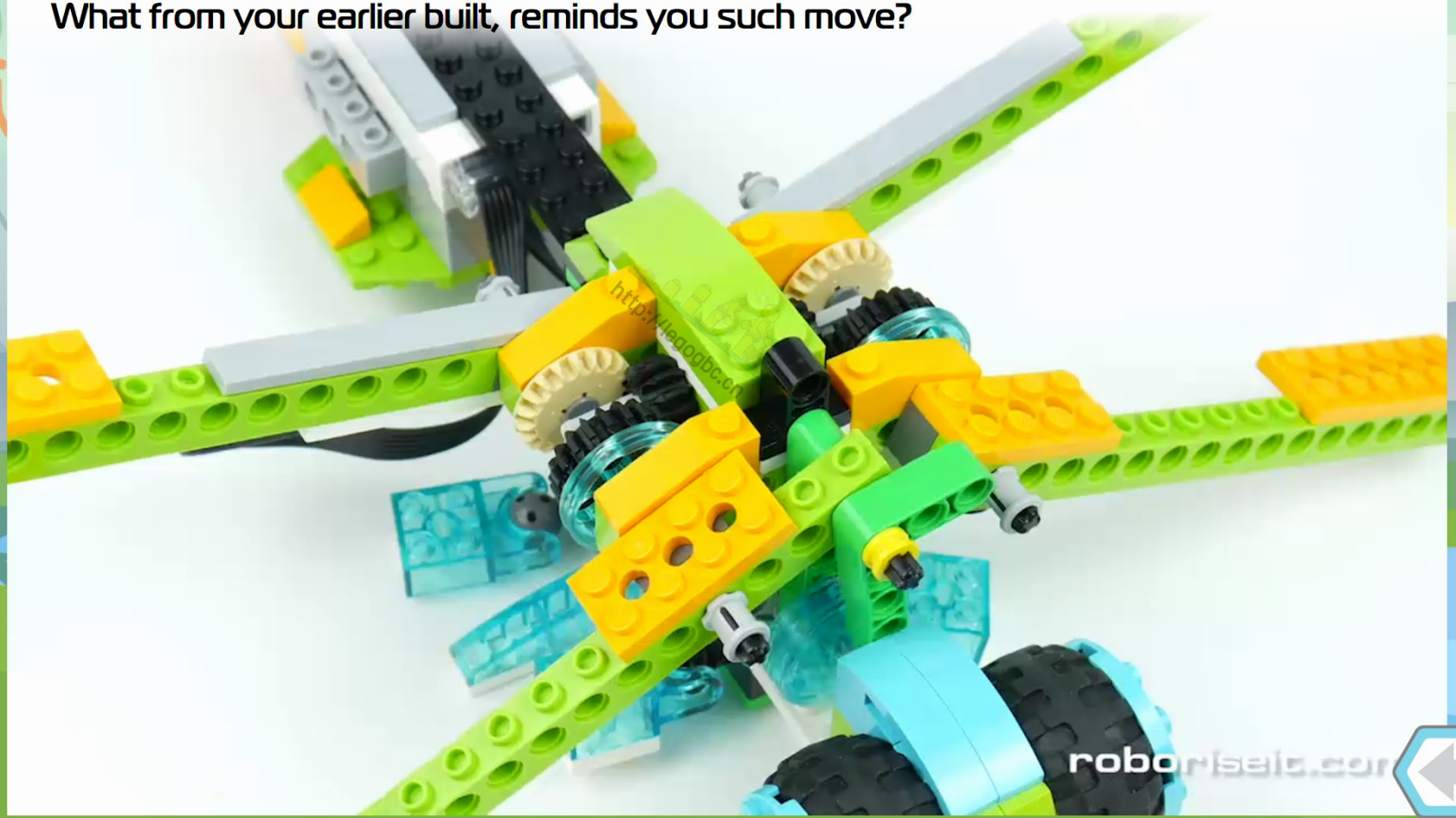

关注公众号获取更多

Design features

The drive from the motor is transmit to the front left wing. From it through the system of gears the rotation is transferred to the other three wings.
What from your earlier built, reminds you such move?

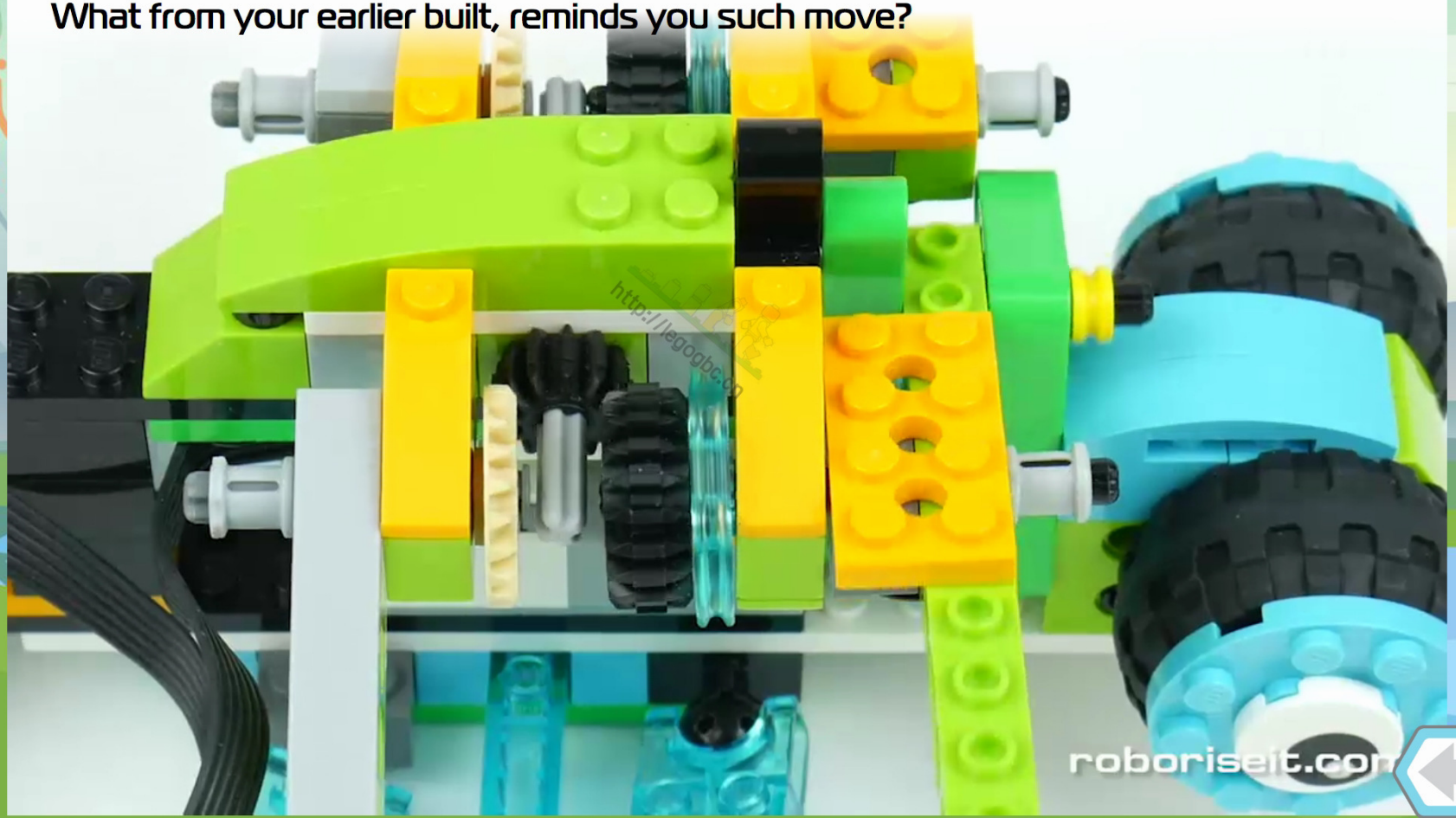

关注公众号获取更多

Robot insect

关注公众号获取更多

Scientists have estimated that for robots that simulate birds or insects, need much less energy than copters. Therefore, creating such robots is actively developing.

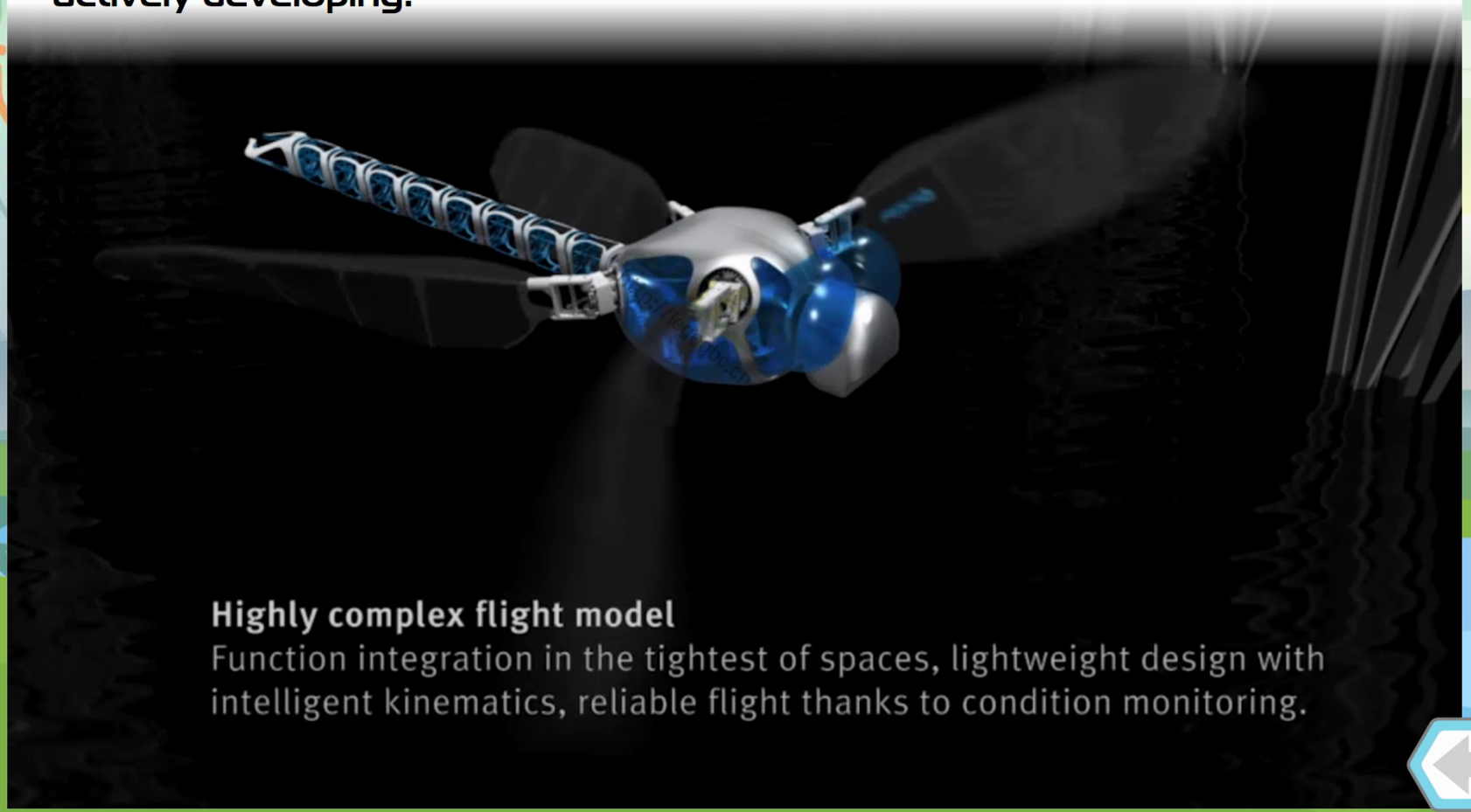

Robot insect

Scientists have estimated that for robots that simulate birds or insects, need much less energy than copters. Therefore, creating such robots is actively developing.

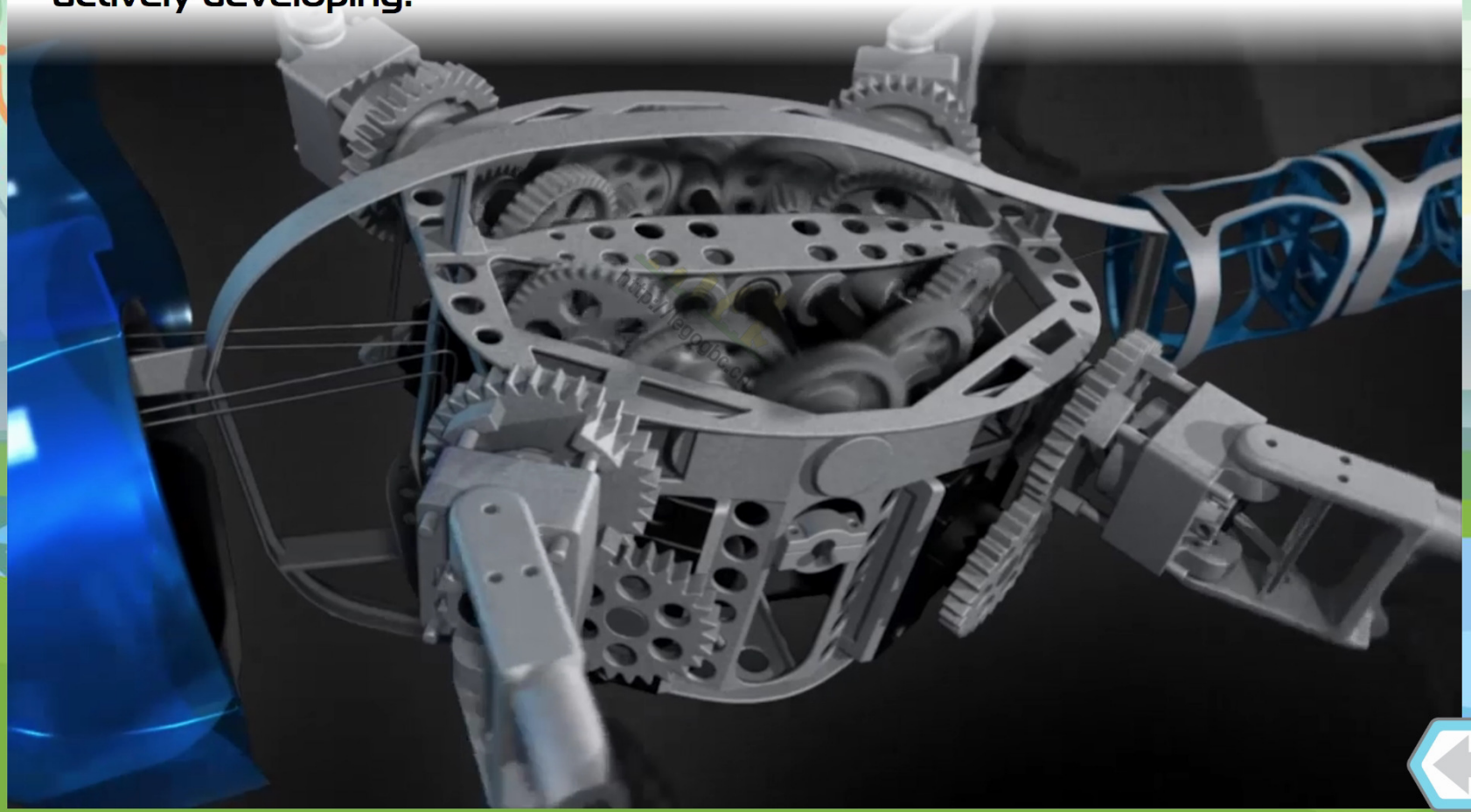

关注公众号获取更多

Robot insect

Scientists have estimated that for robots that simulate birds or insects, need much less energy than copters. Therefore, creating such robots is actively developing.

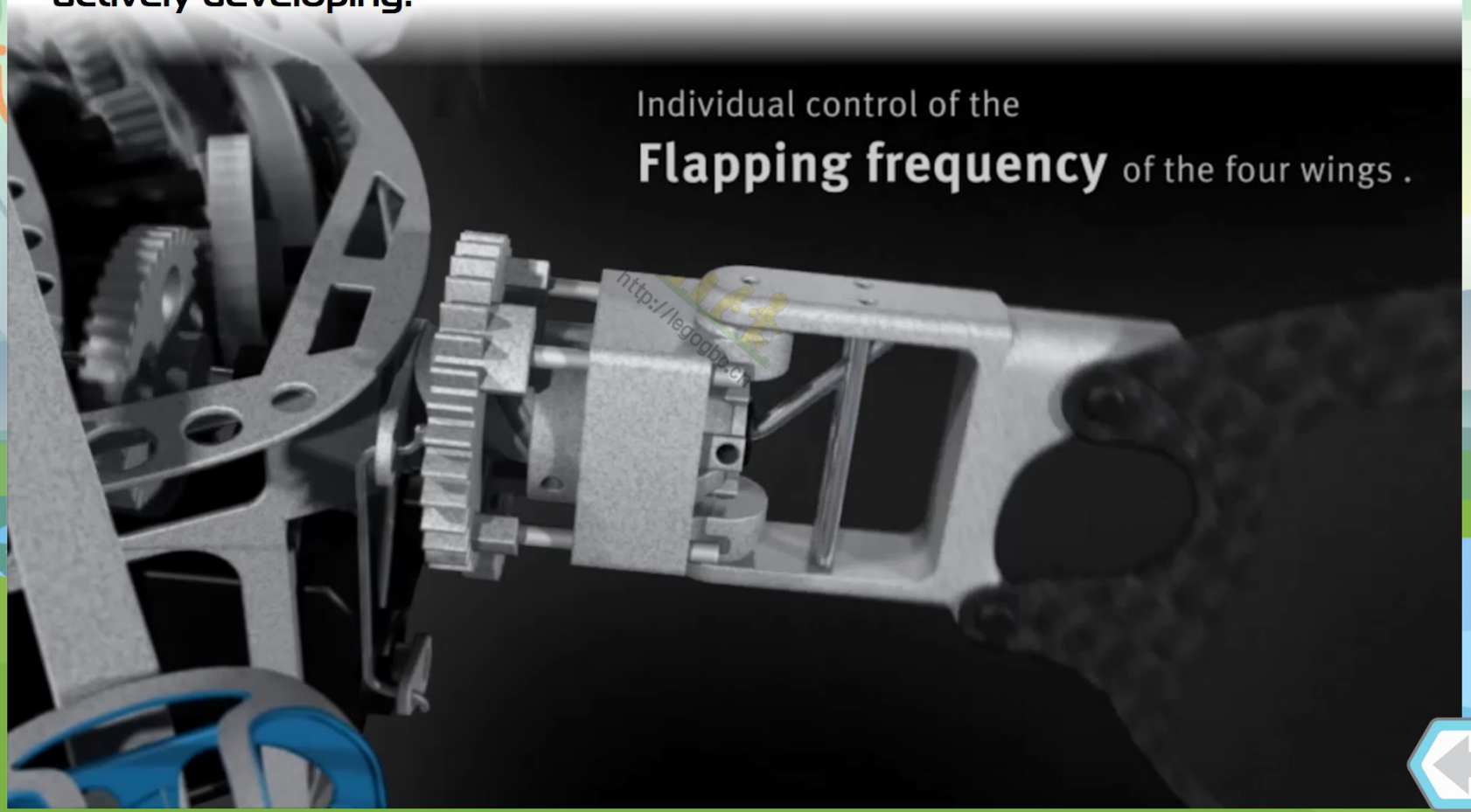

关注公众号获取更多

Build the robot!

关注公众号获取更多

Meganeura

关注公众号获取更多

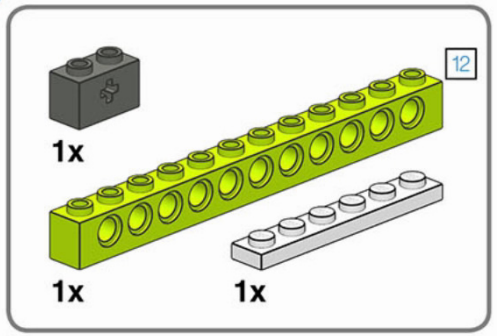

1

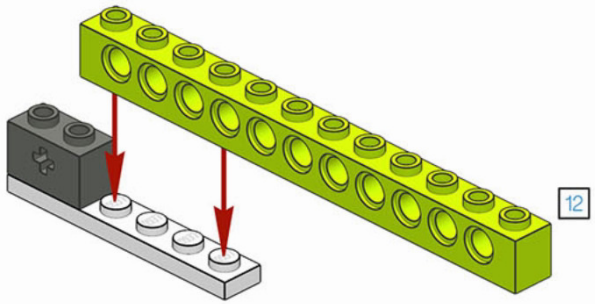

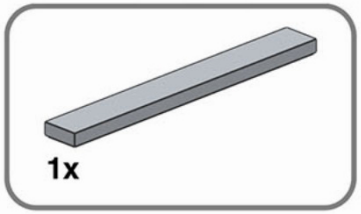

2

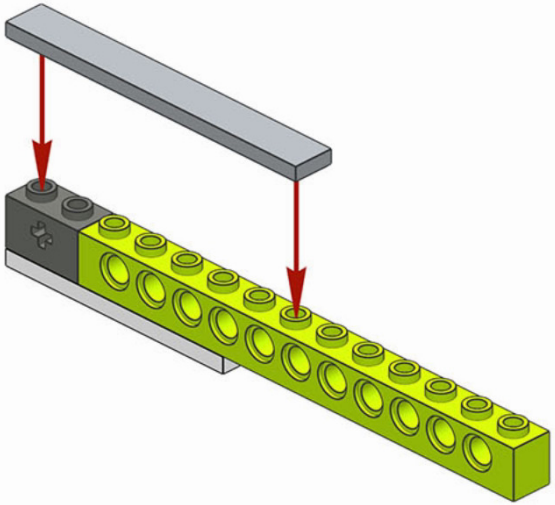

http://legogbc.cn

关注公众号获取更多

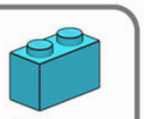

3

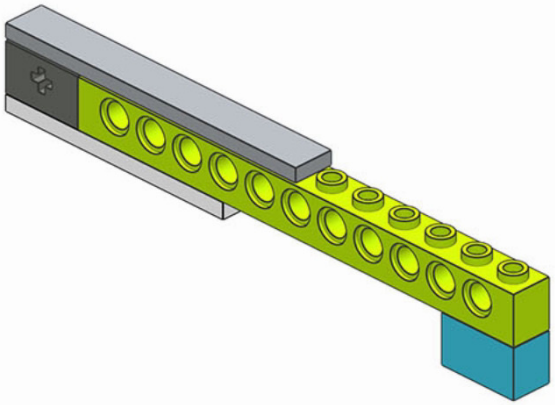

2x

http://legogbc.cn

关注公众号获取更多

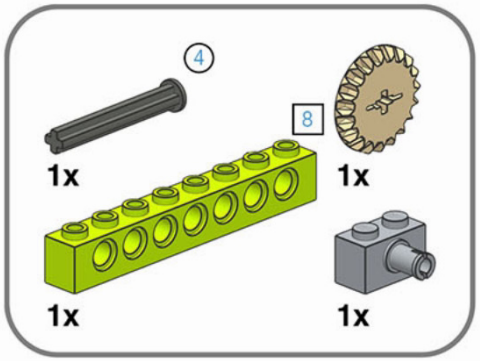

3

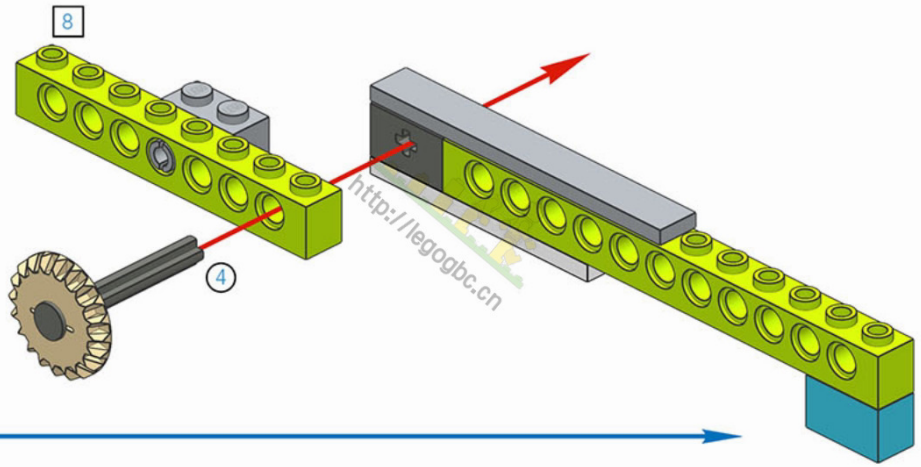

http://legogbc.cn

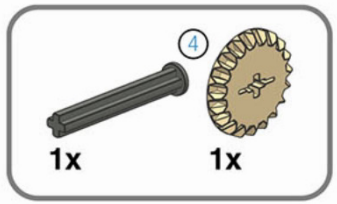

4

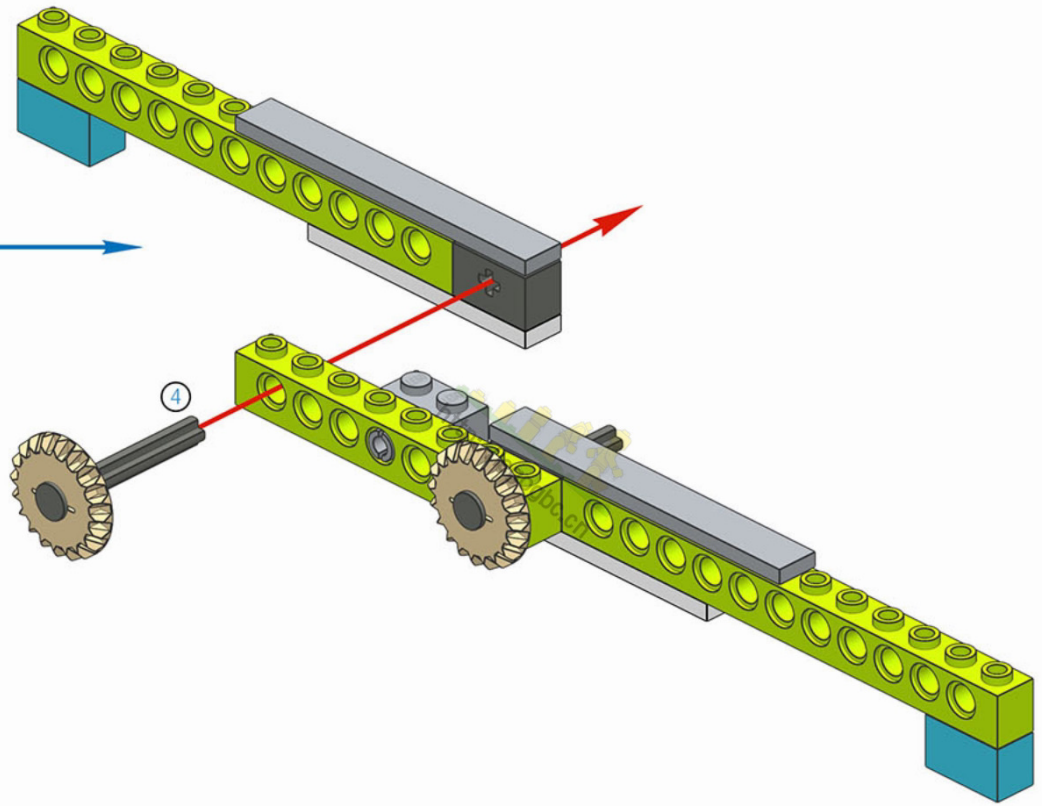

关注公众号获取更多

2x

5

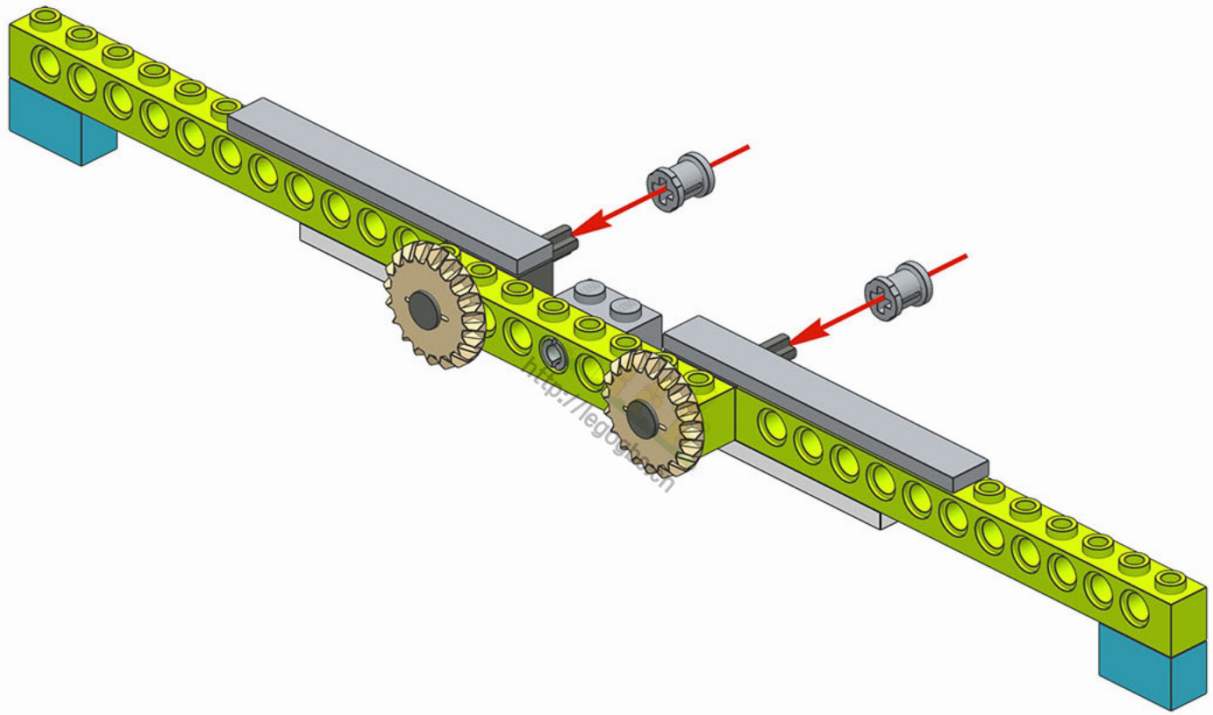

关注公众号获取更多

6

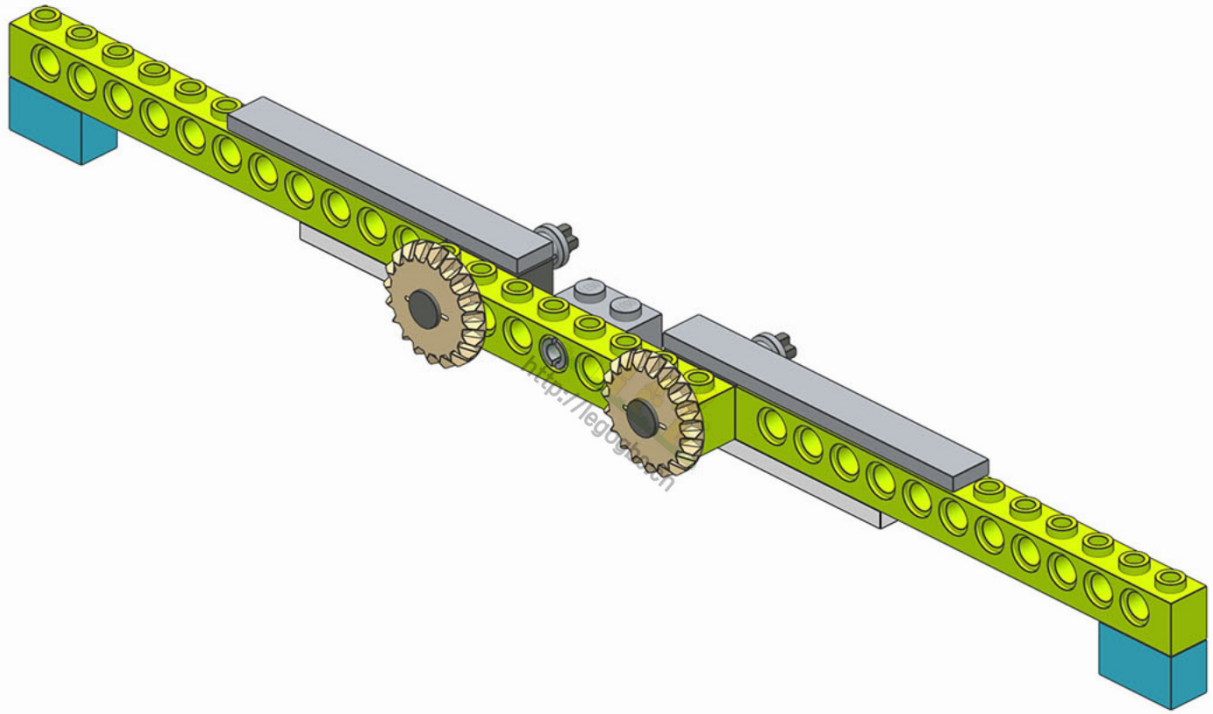

关注公众号获取更多

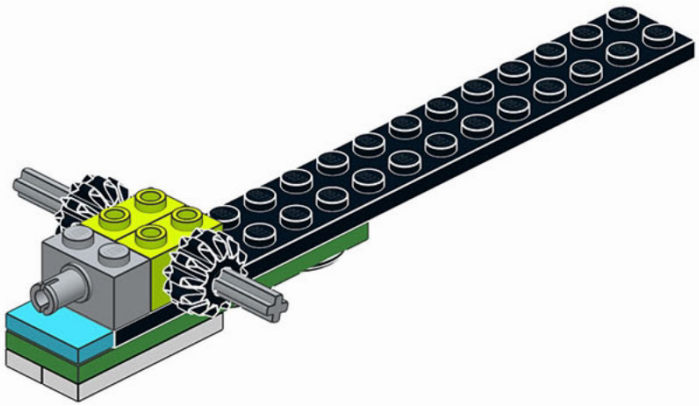

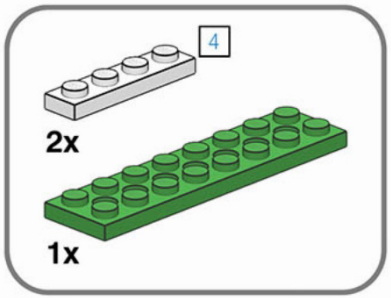

7

http://legogbc.cn

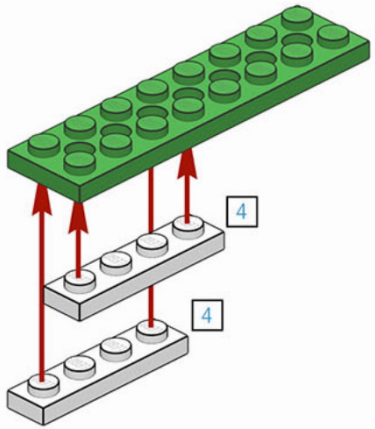

关注公众号获取更多

2x

8

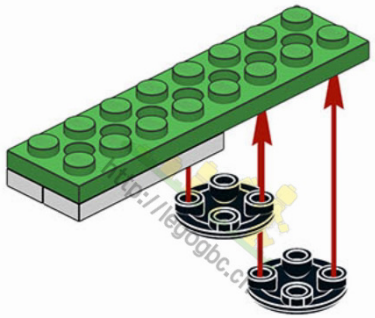

关注公众号获取更多

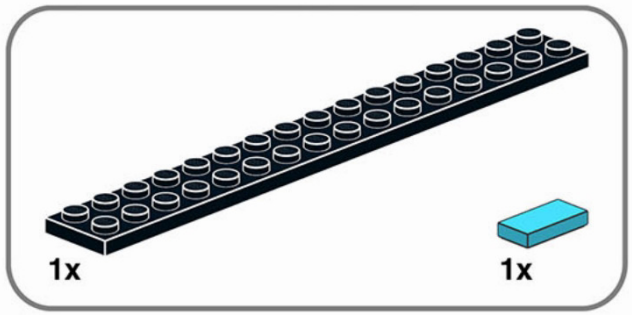

9

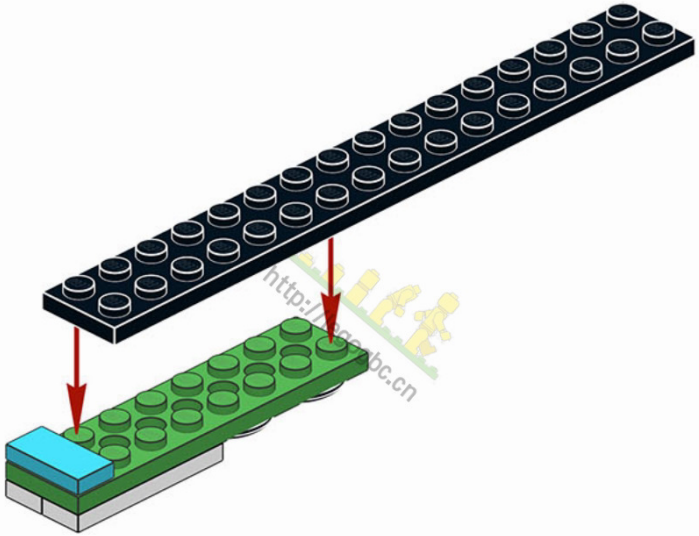

关注公众号获取更多

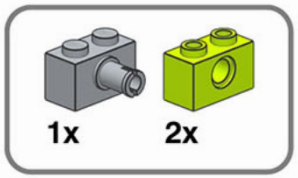

10

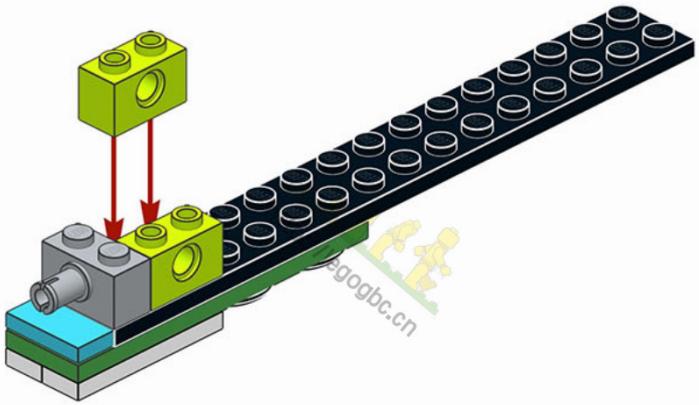

关注公众号获取更多

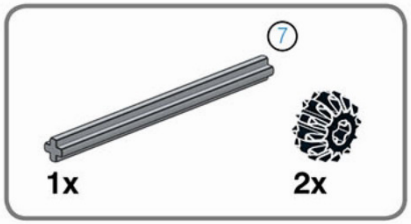

11

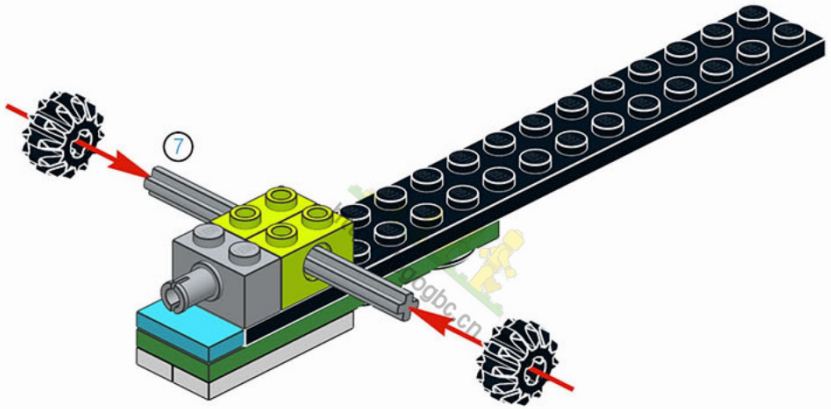

关注公众号获取更多

12

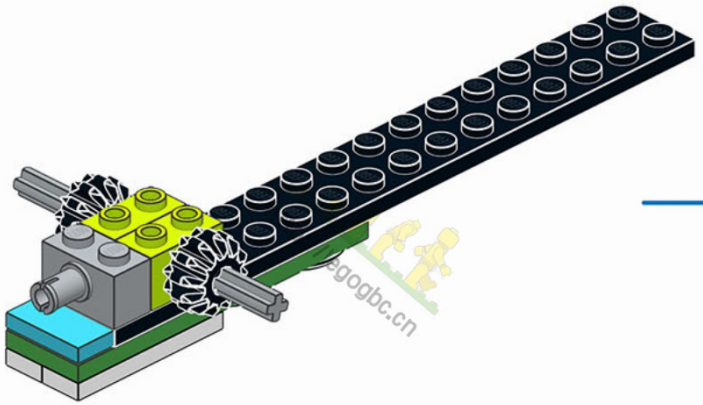

关注公众号获取更多

13

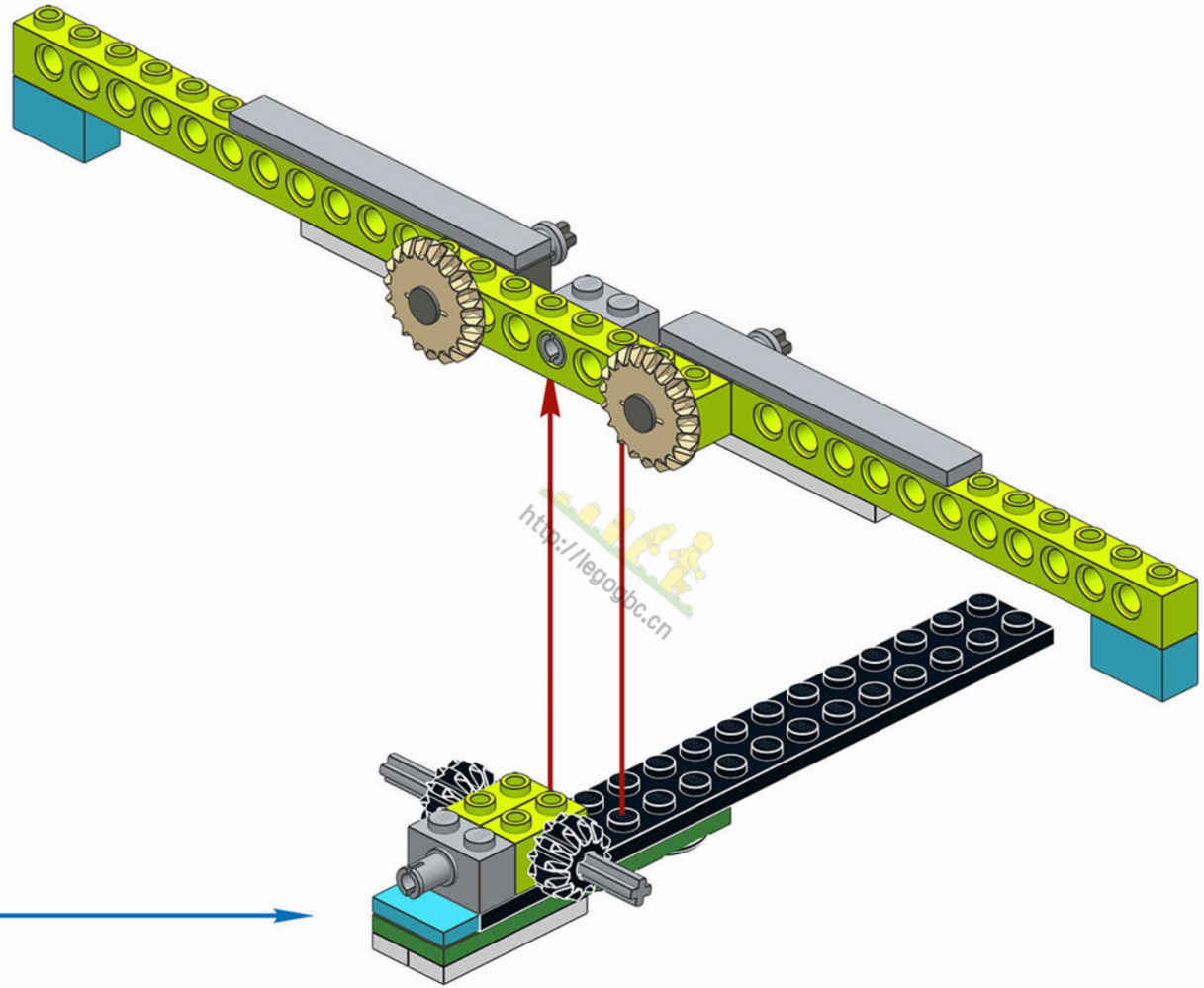

http://legogbc.cn

关注公众号获取更多

14

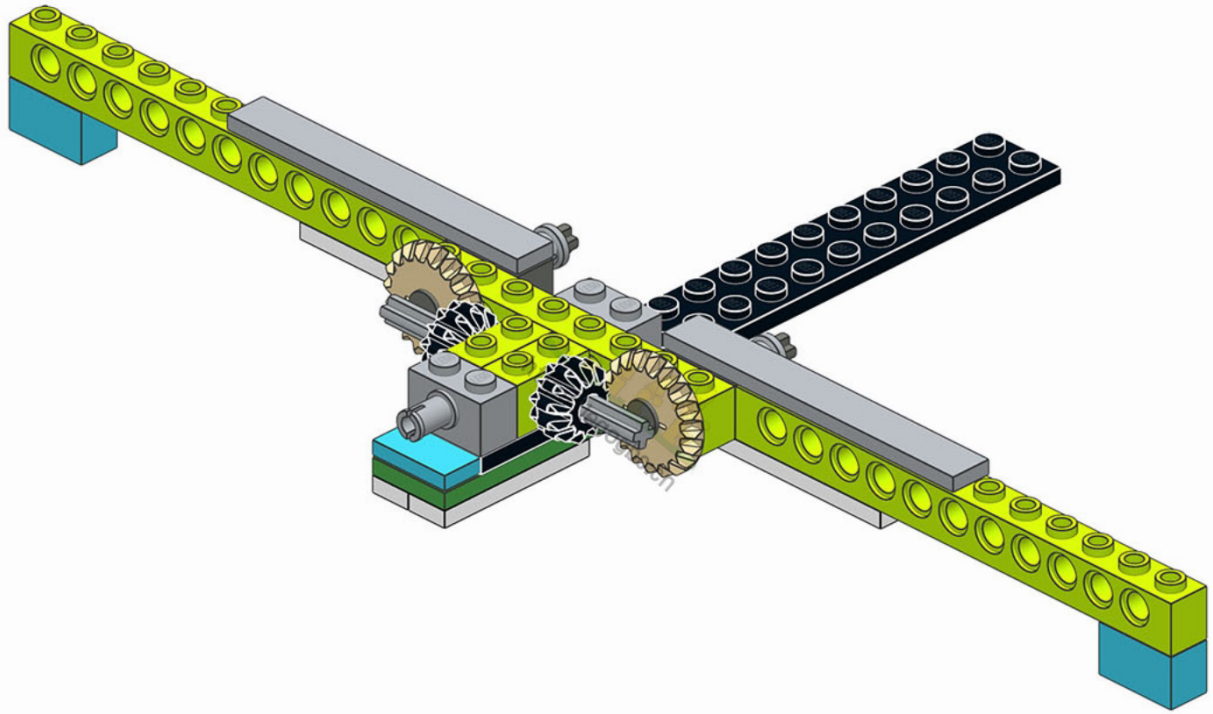

关注公众号获取更多

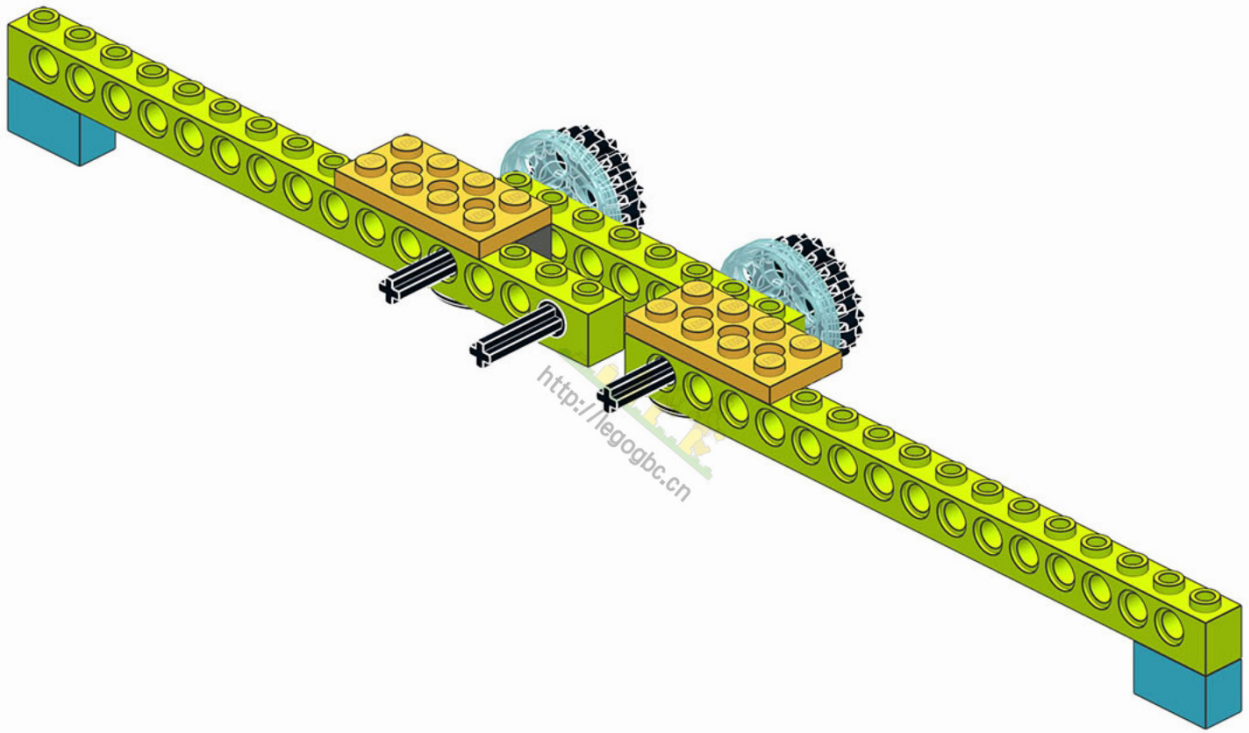

关注公众号获取更多

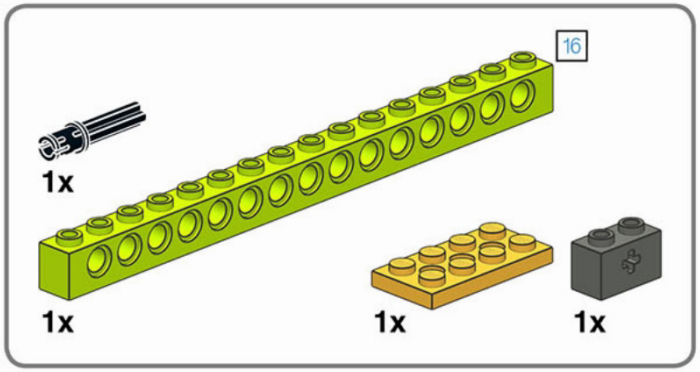

16

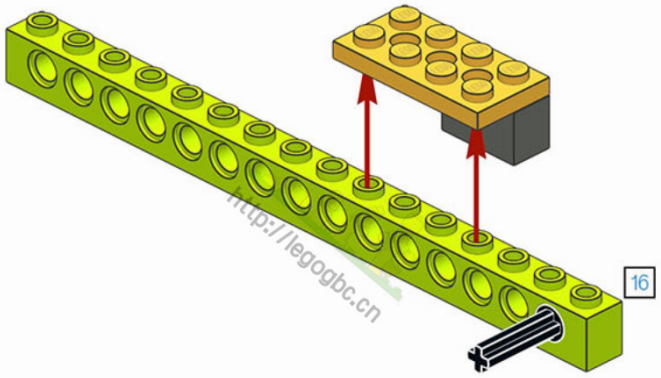

http://legogbc.cn

关注公众号获取更多

1x

17

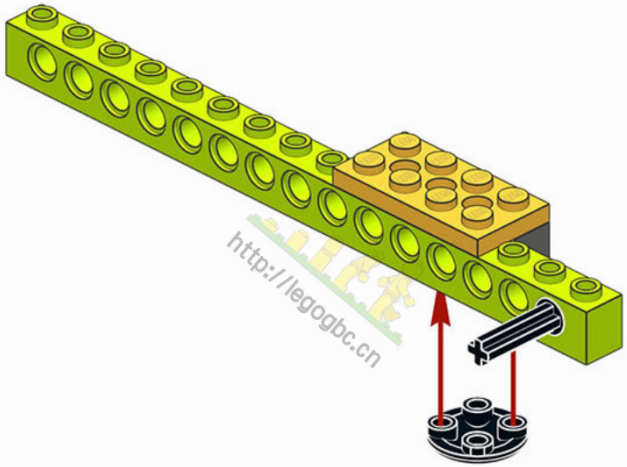

关注公众号获取更多

1x

18

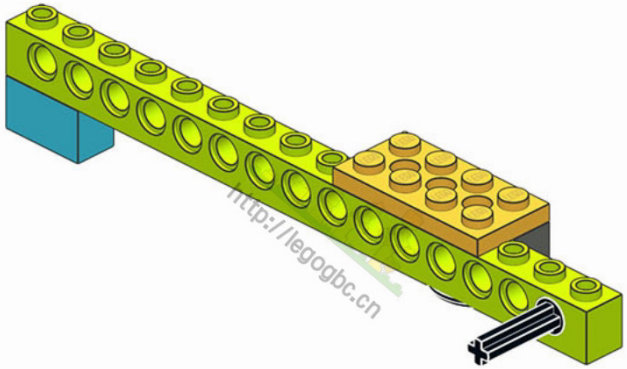

关注公众号获取更多

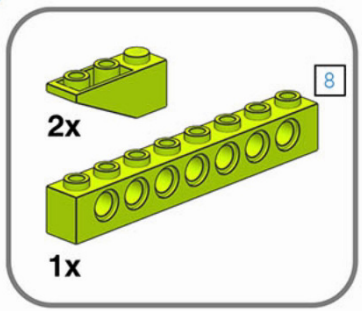

1

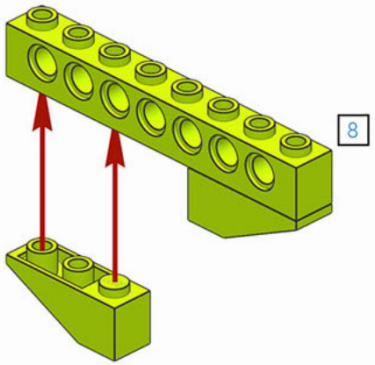

2

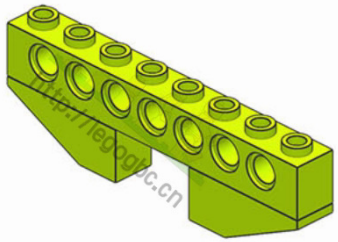

关注公众号获取更多

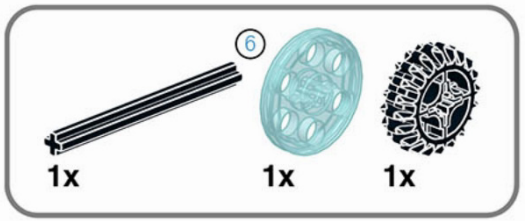

20

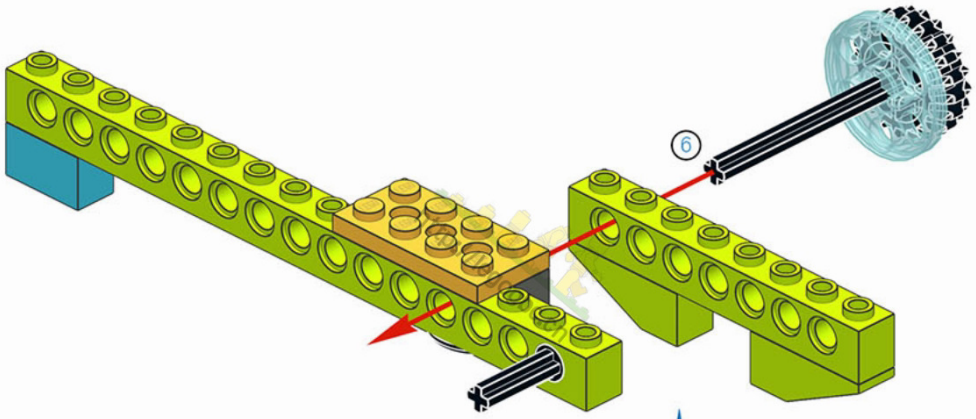

关注公众号获取更多

21

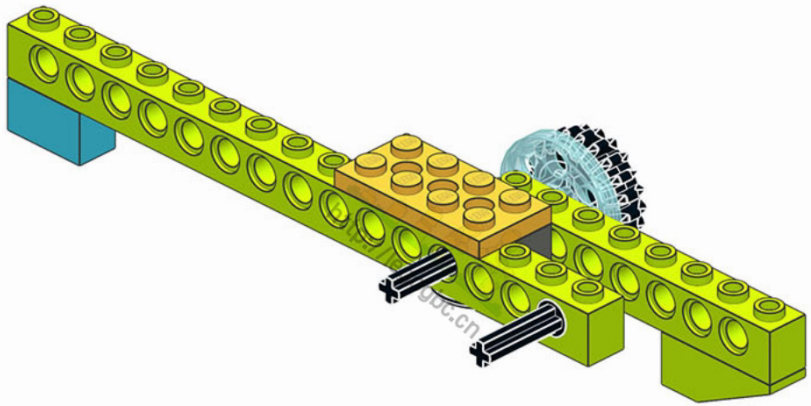

关注公众号获取更多

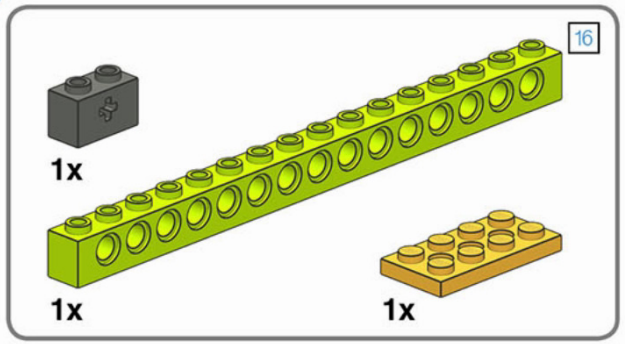

1

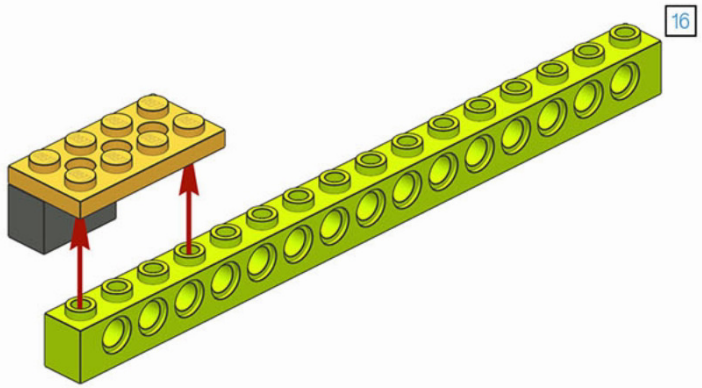

http://legogbc.cn

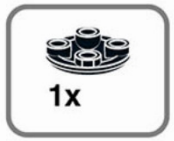

2

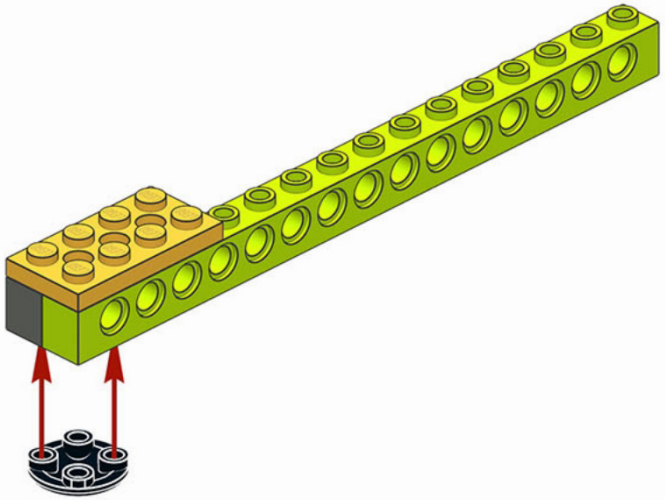

关注公众号获取更多

3

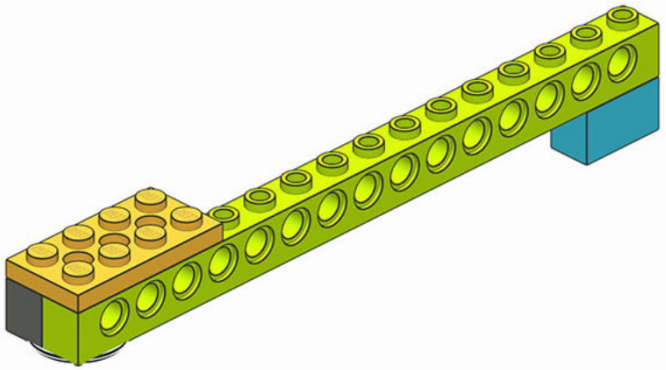

http://legogbc.cn

关注公众号获取更多

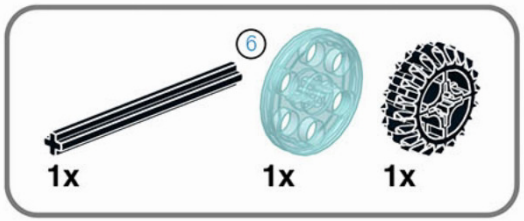

24

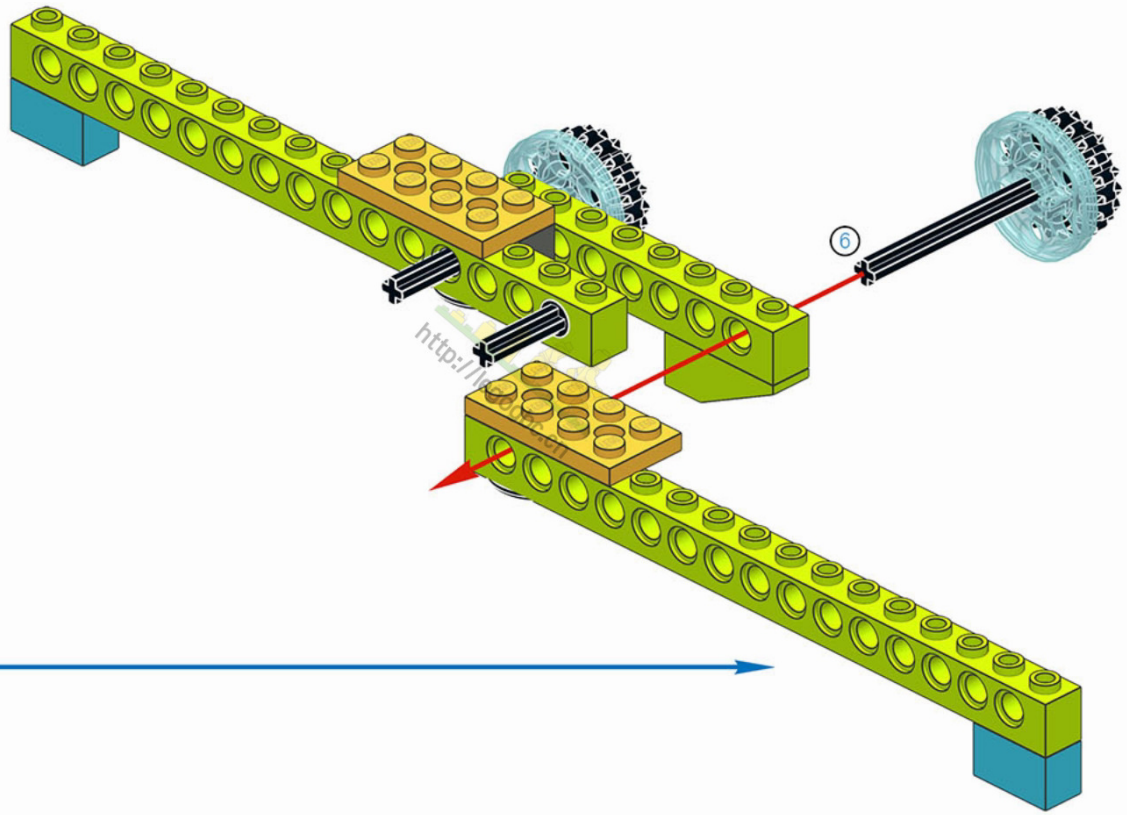

关注公众号获取更多

25

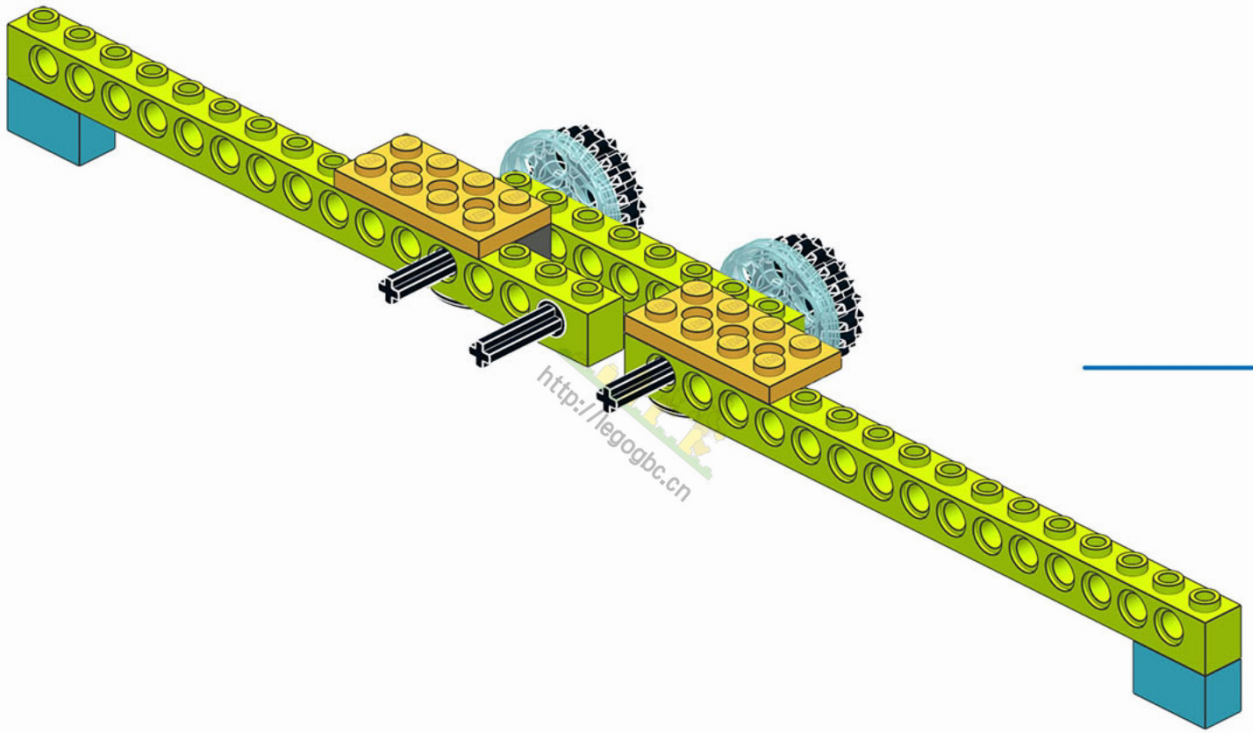

http://legogbc.cn

关注公众号获取更多

26

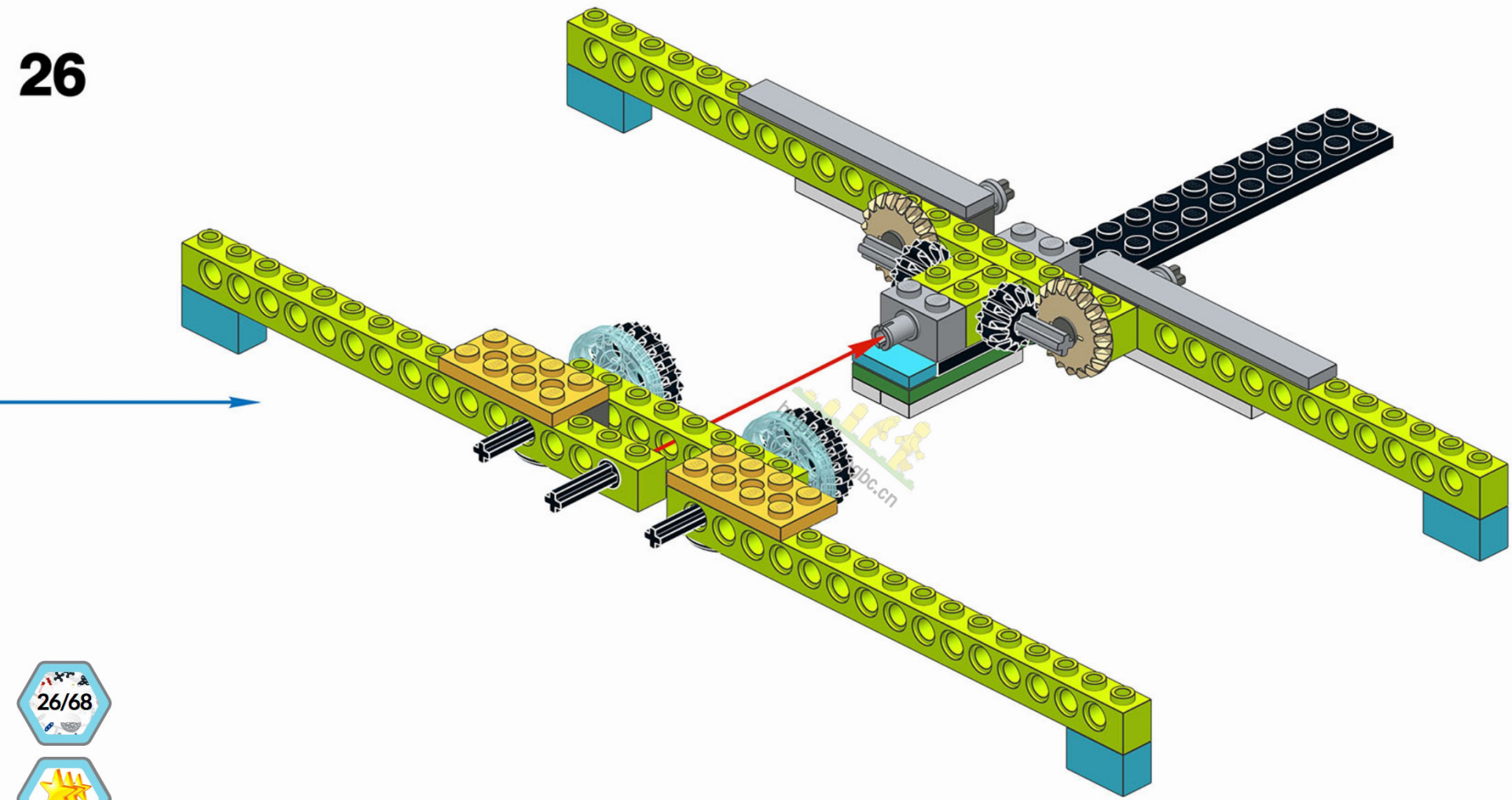

关注公众号获取更多

27

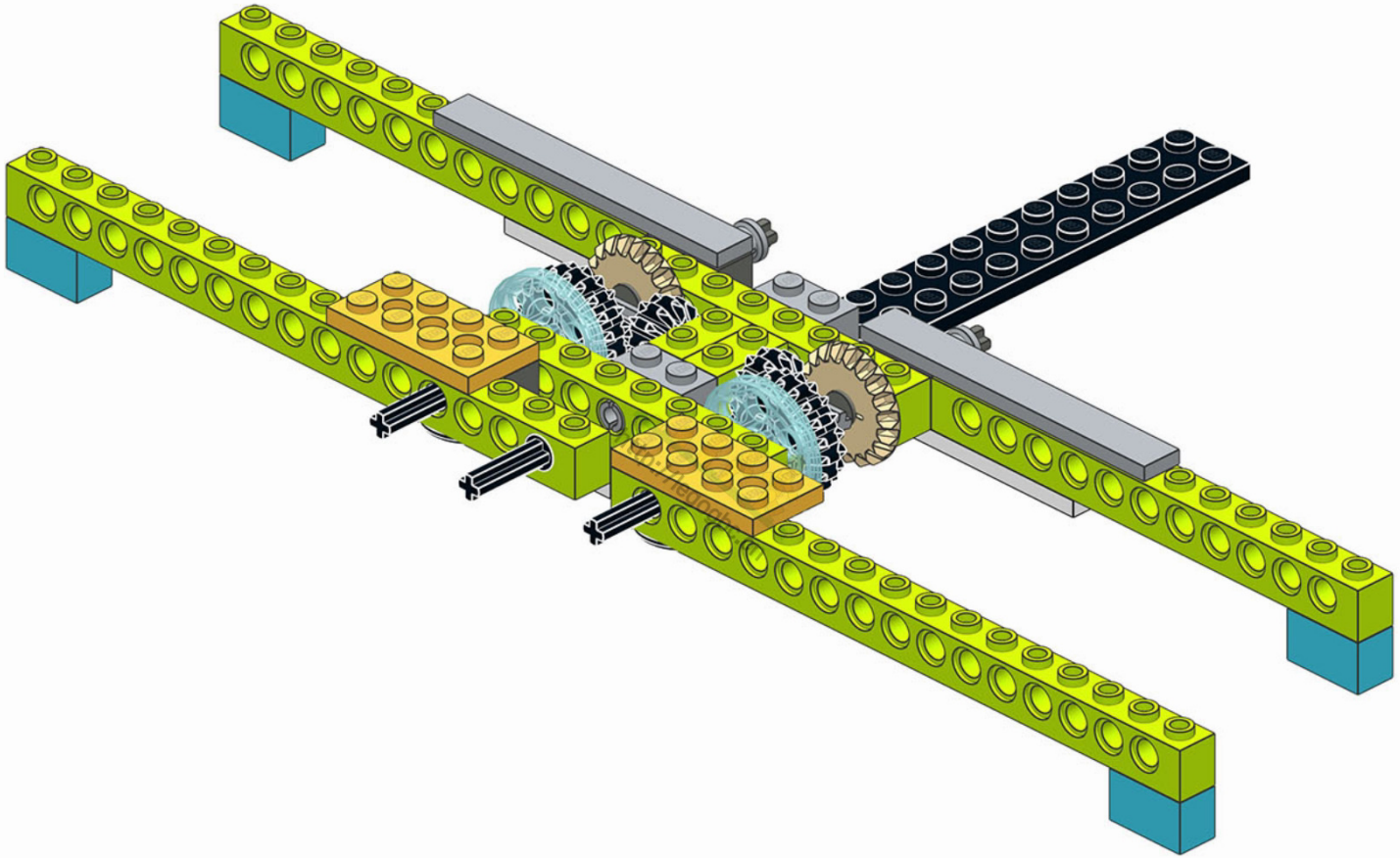

关注公众号获取更多

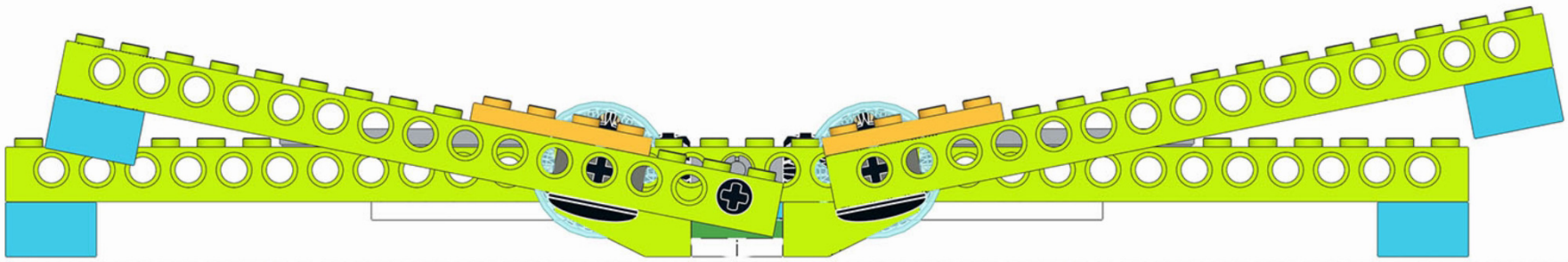

http://legogbc.cn

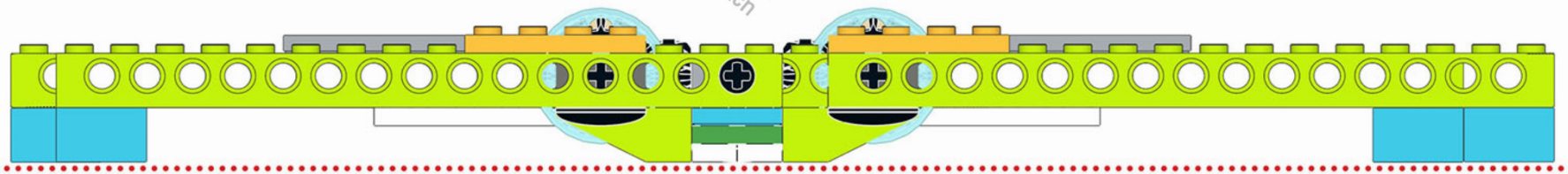

关注公众号获取更多

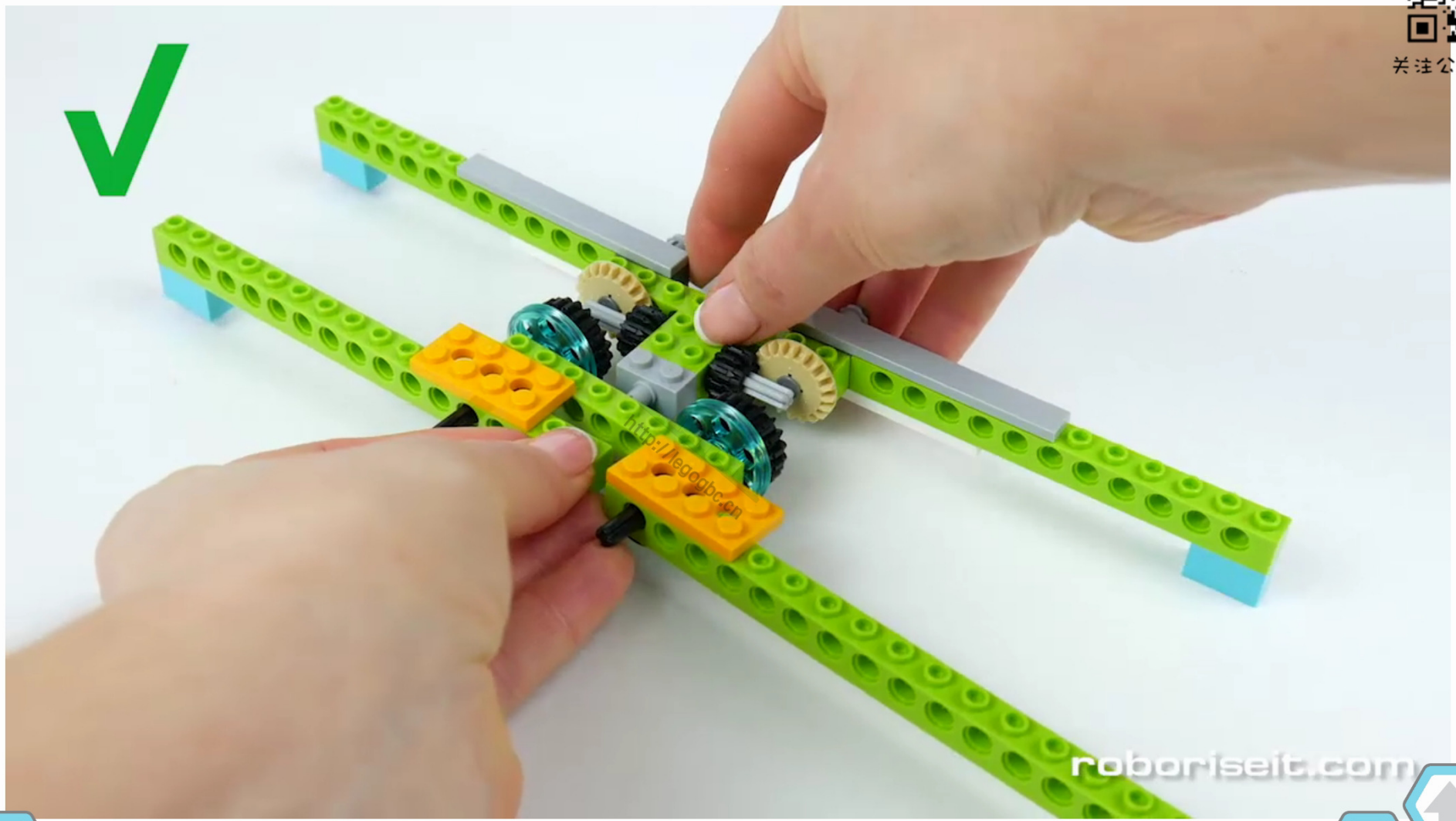

关注公众号获取更多

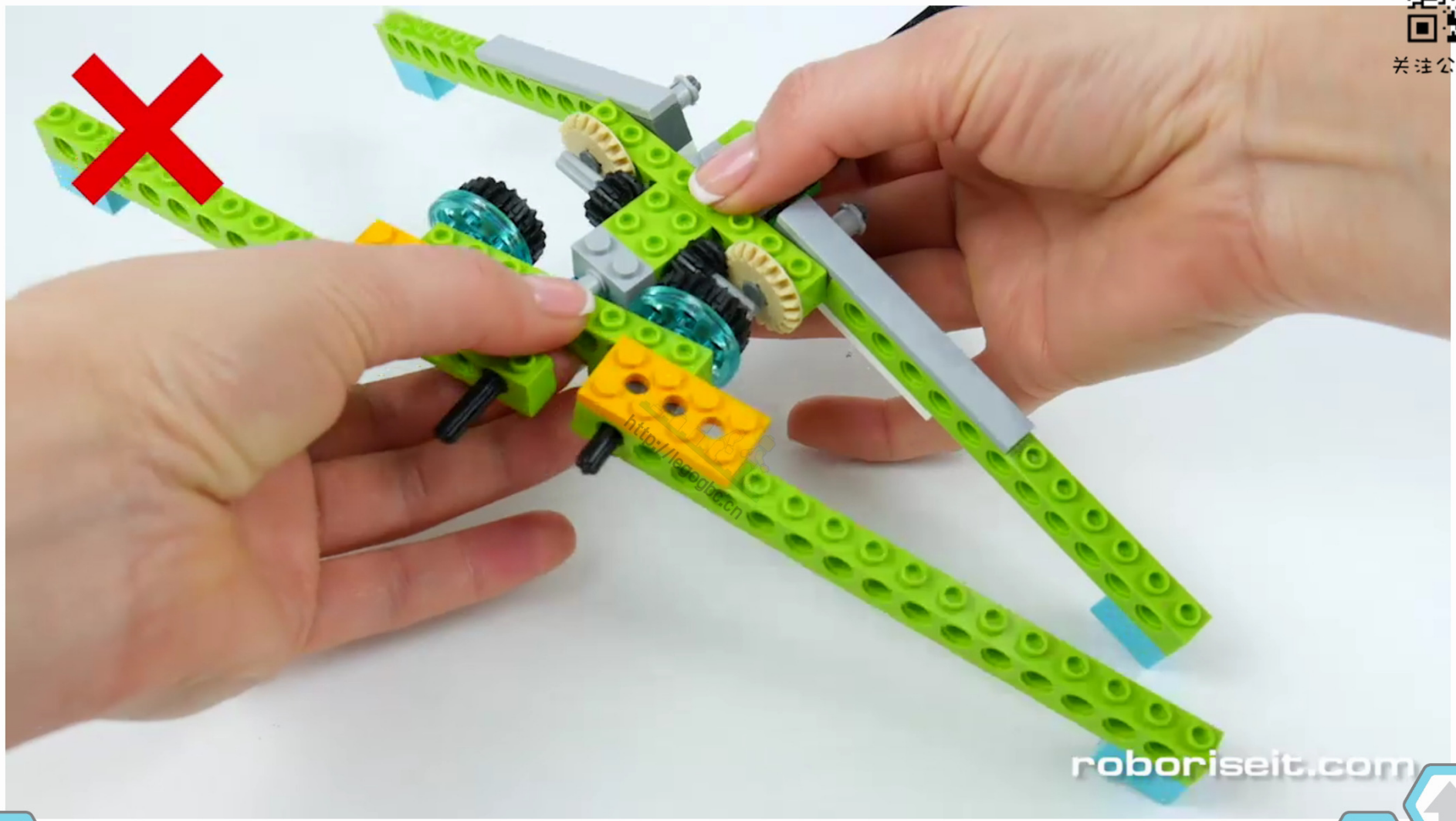

关注公众号获取更多

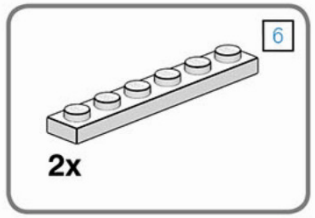

29

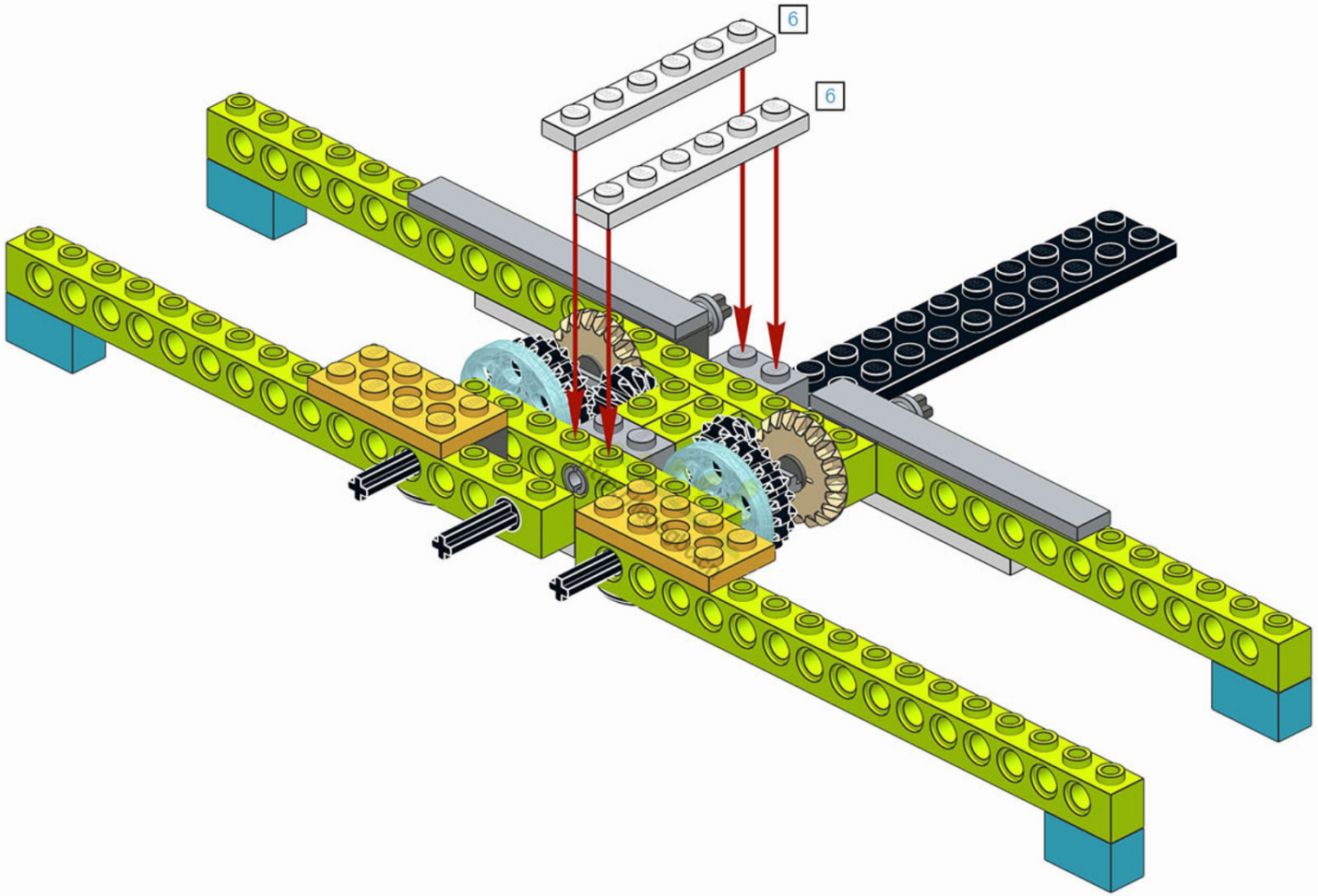

关注公众号获取更多

1x 1x

1

2

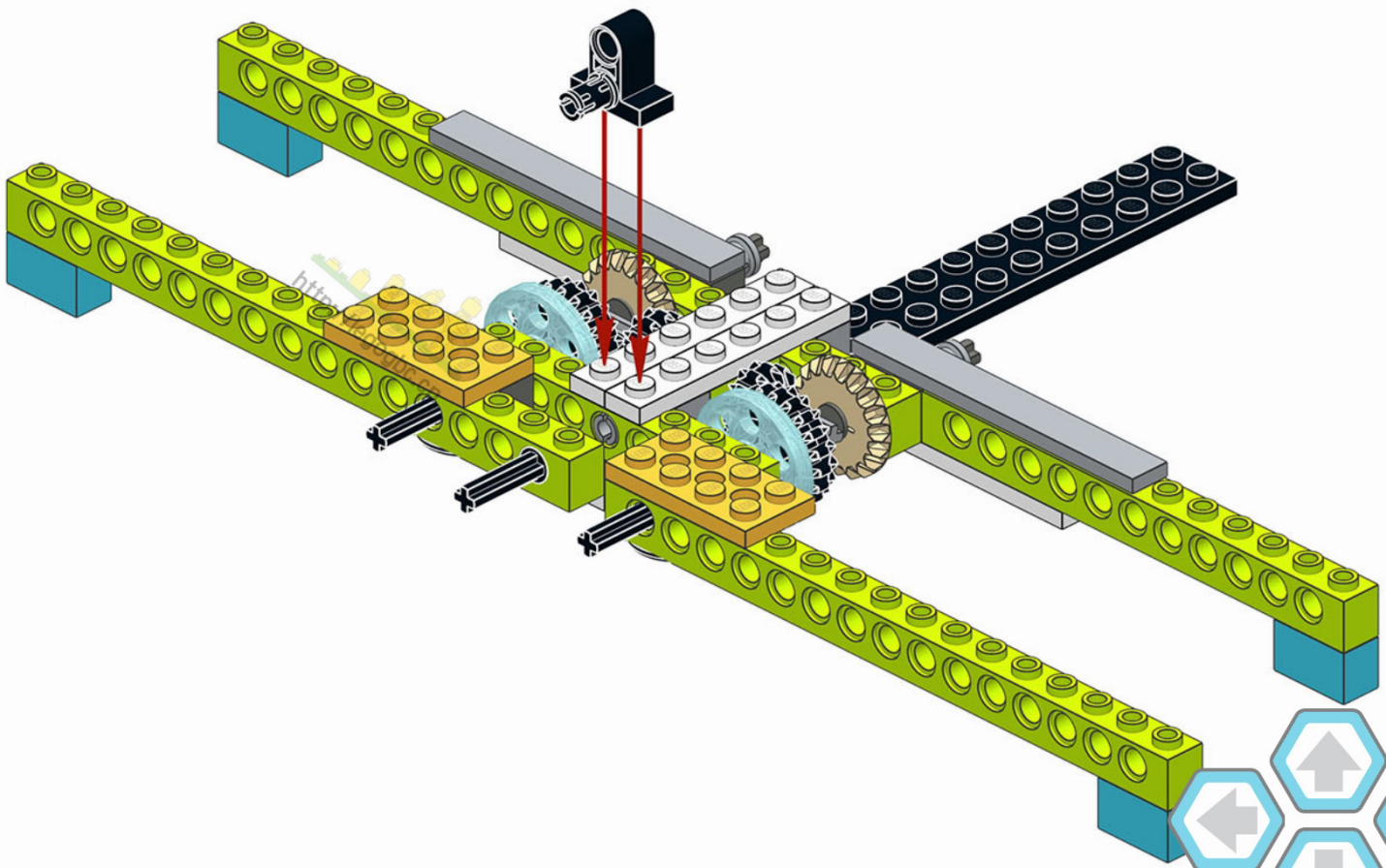

关注公众号获取更多

31

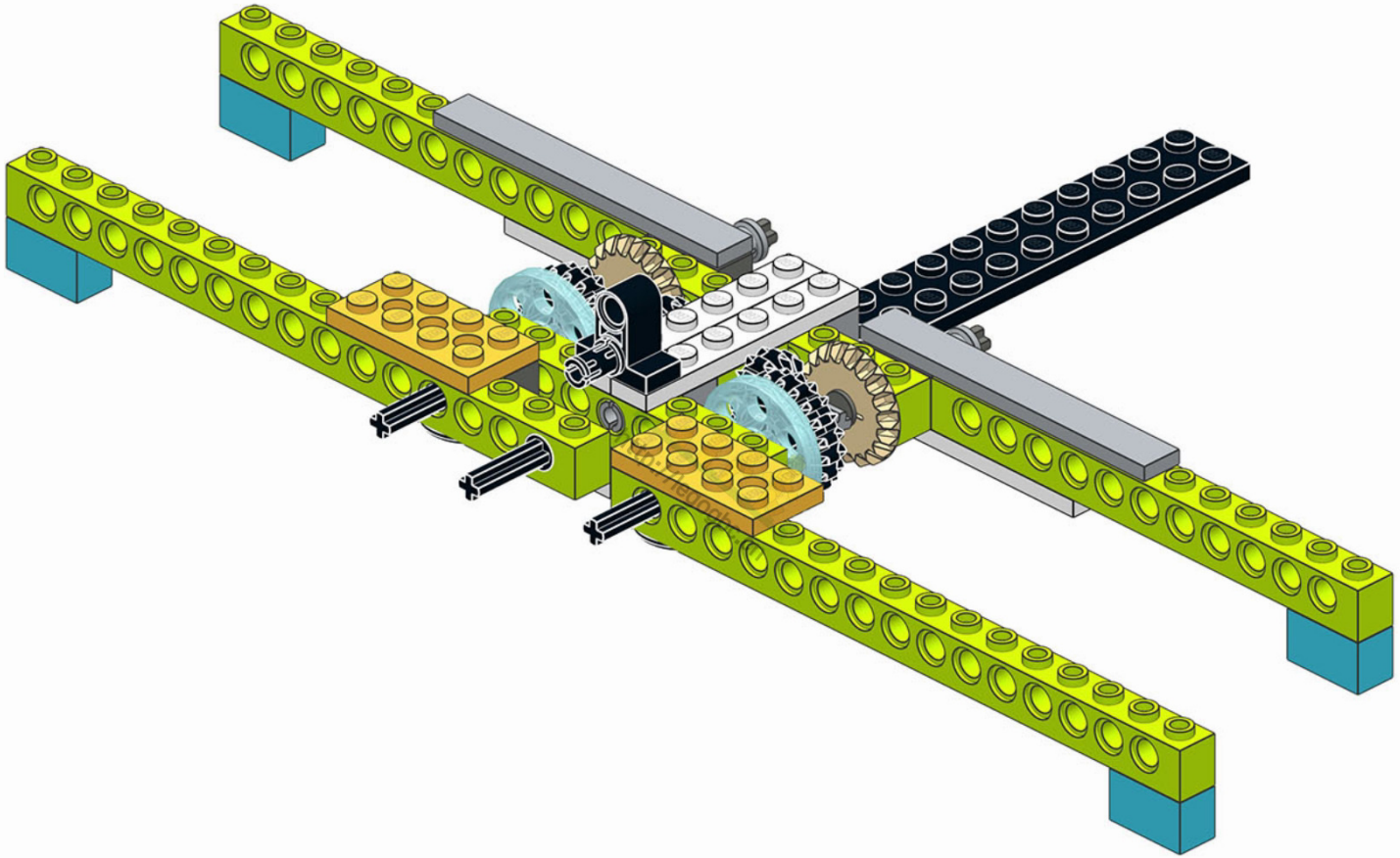

关注公众号获取更多

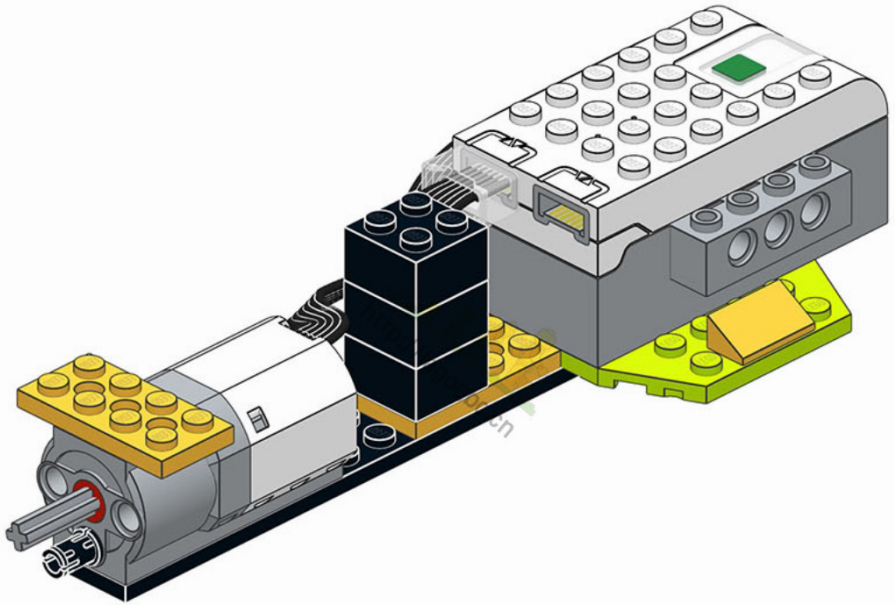

关注公众号获取更多

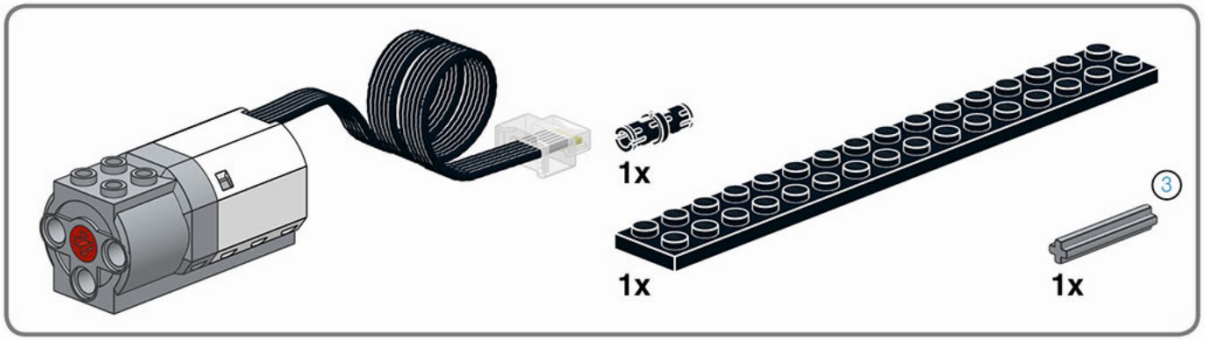

33

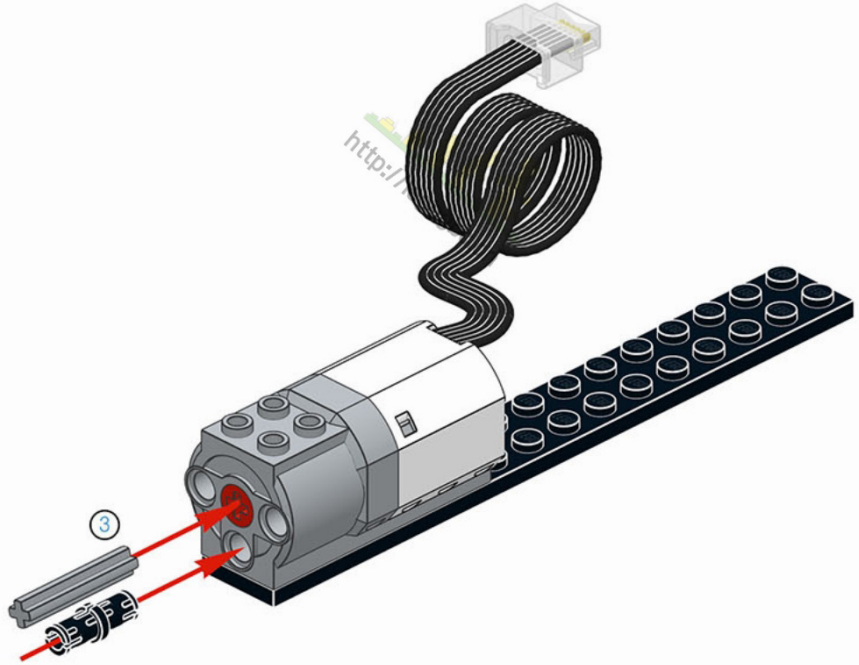

关注公众号获取更多

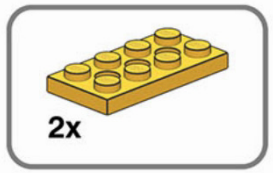

34

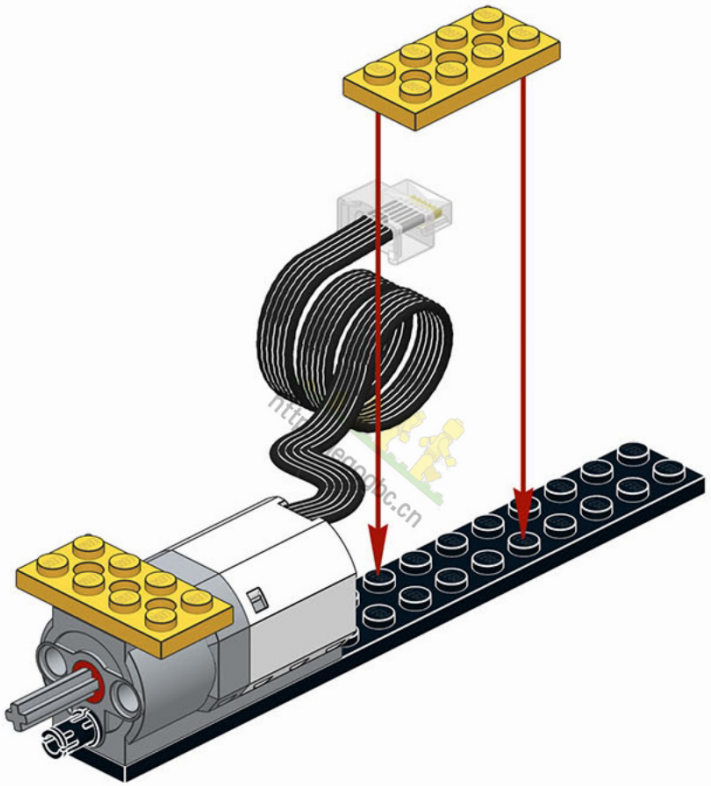

关注公众号获取更多

3x

35

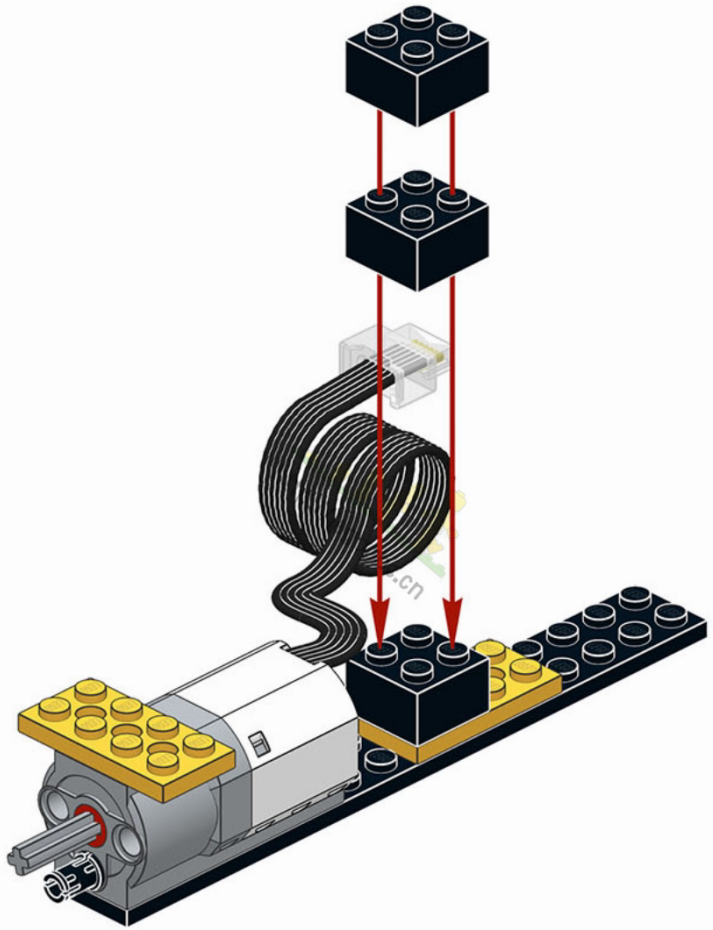

关注公众号获取更多

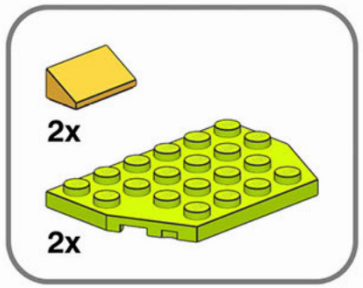

36

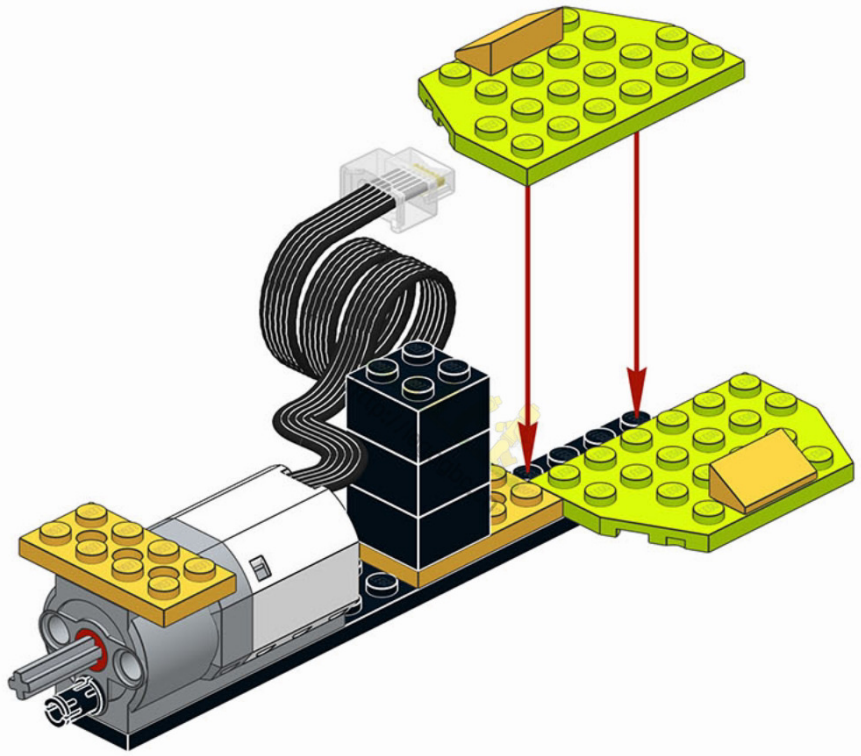

关注公众号获取更多

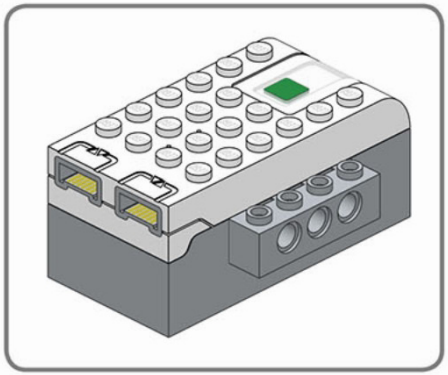

37

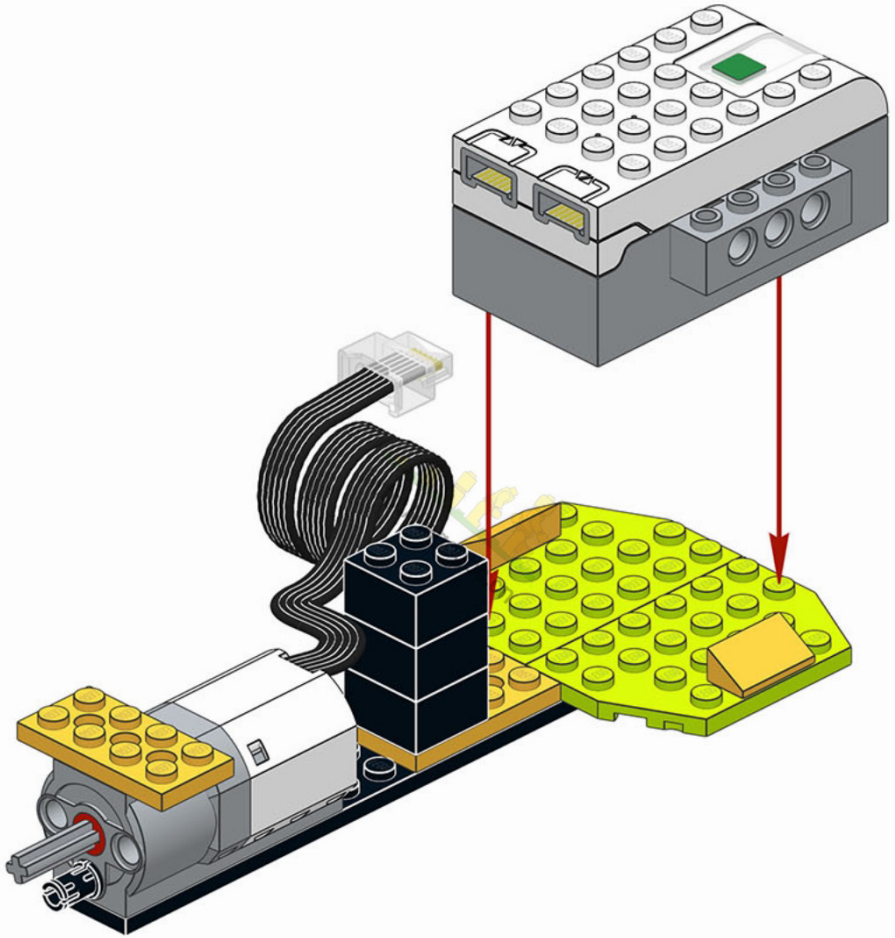

关注公众号获取更多

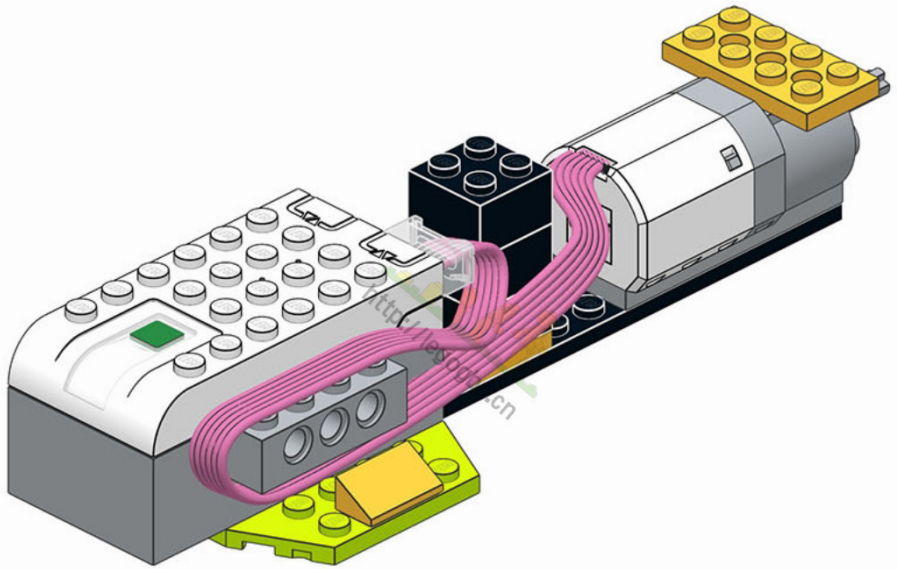

关注公众号获取更多

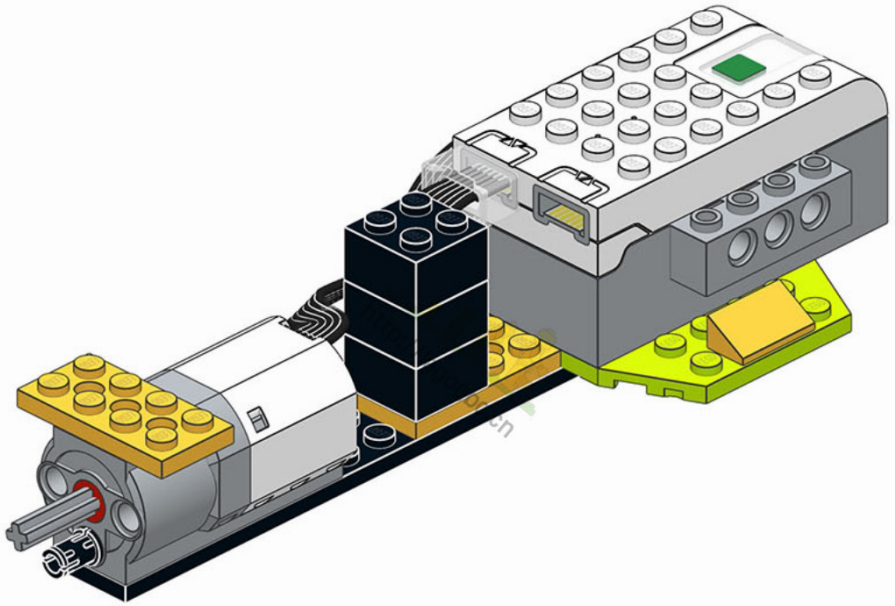

关注公众号获取更多

40

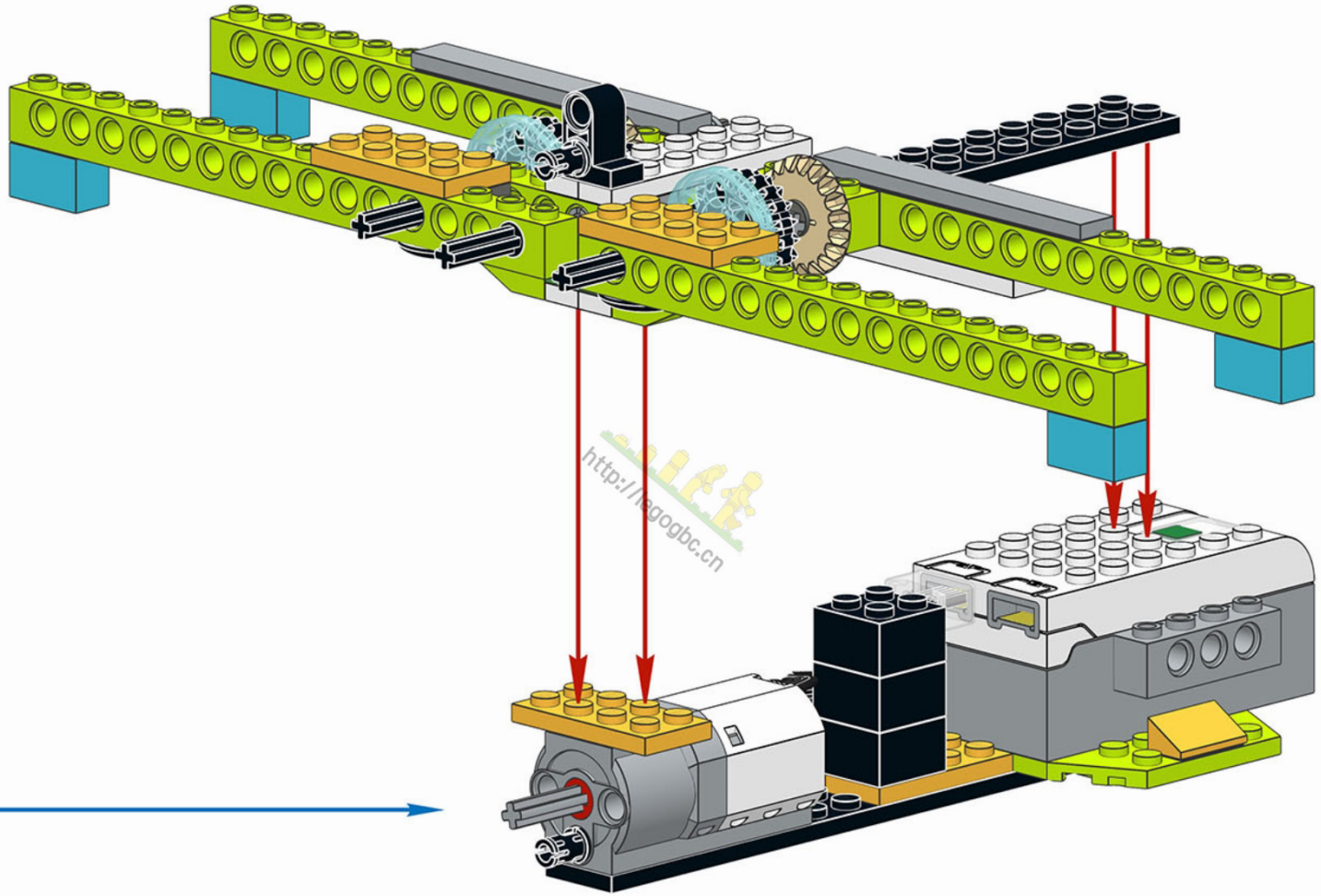

关注公众号获取更多

41

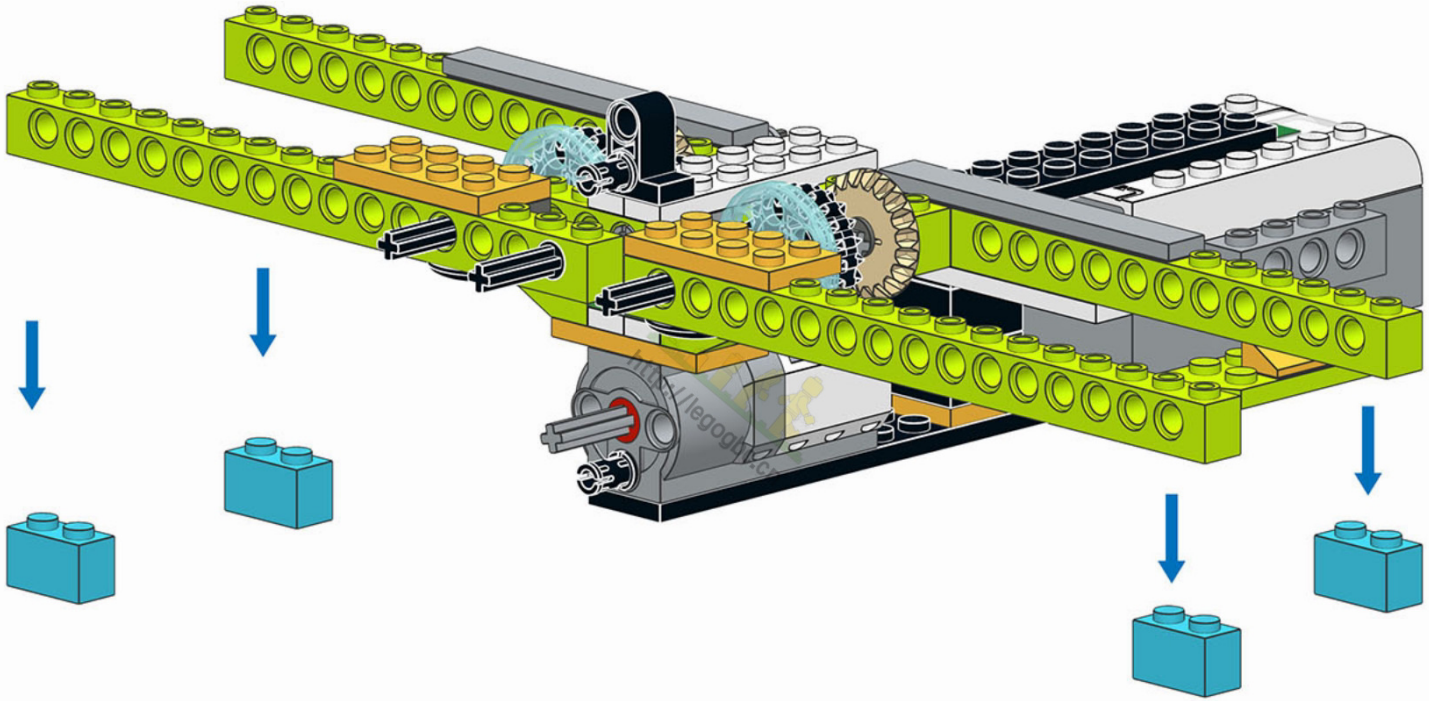

关注公众号获取更多

42

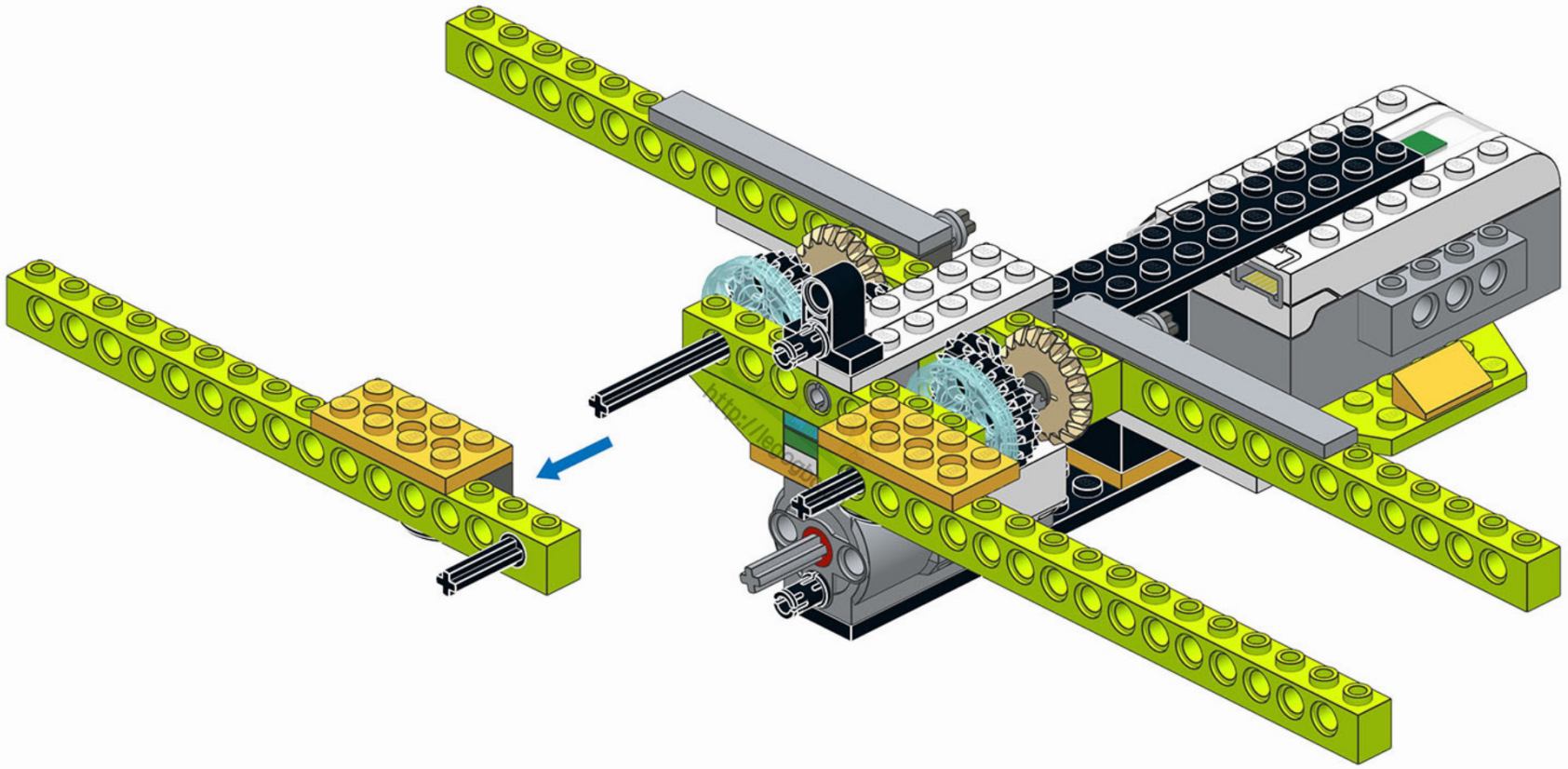

关注公众号获取更多

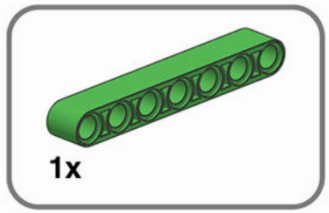

43

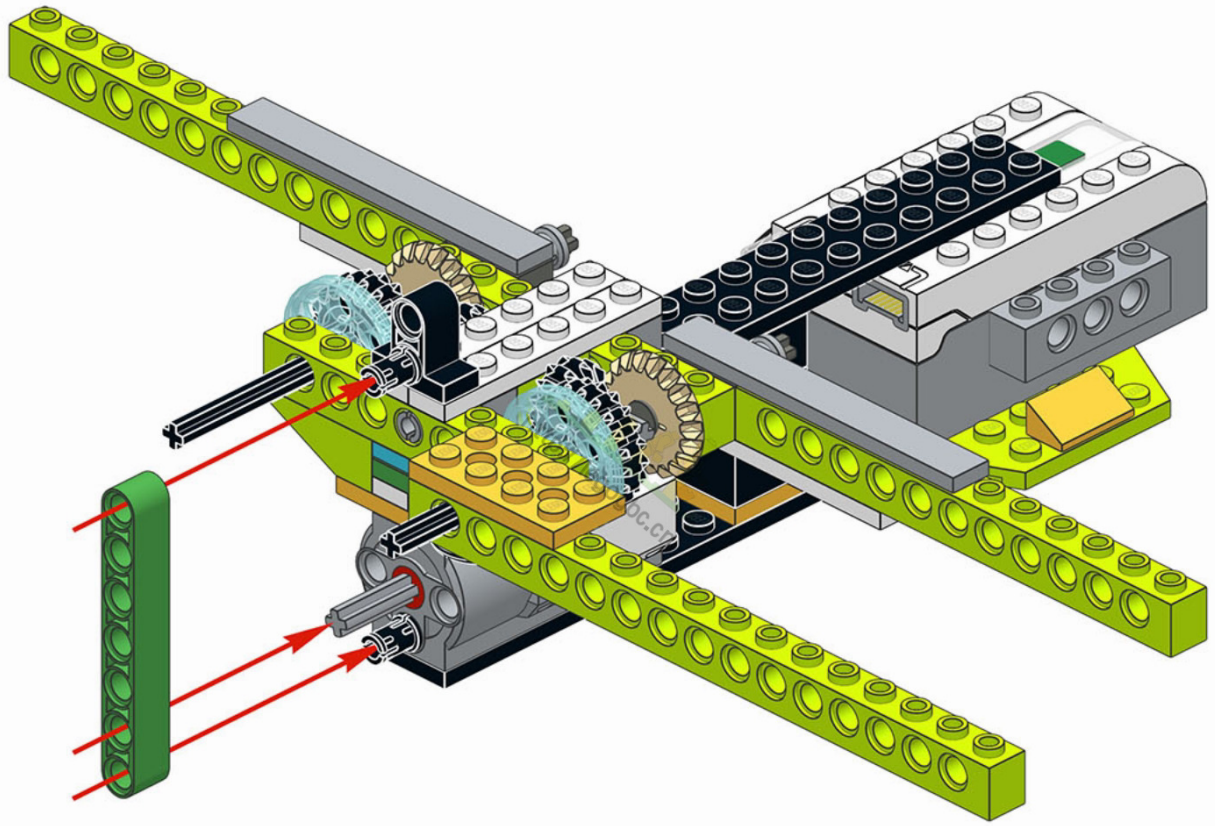

关注公众号获取更多

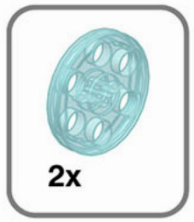

44

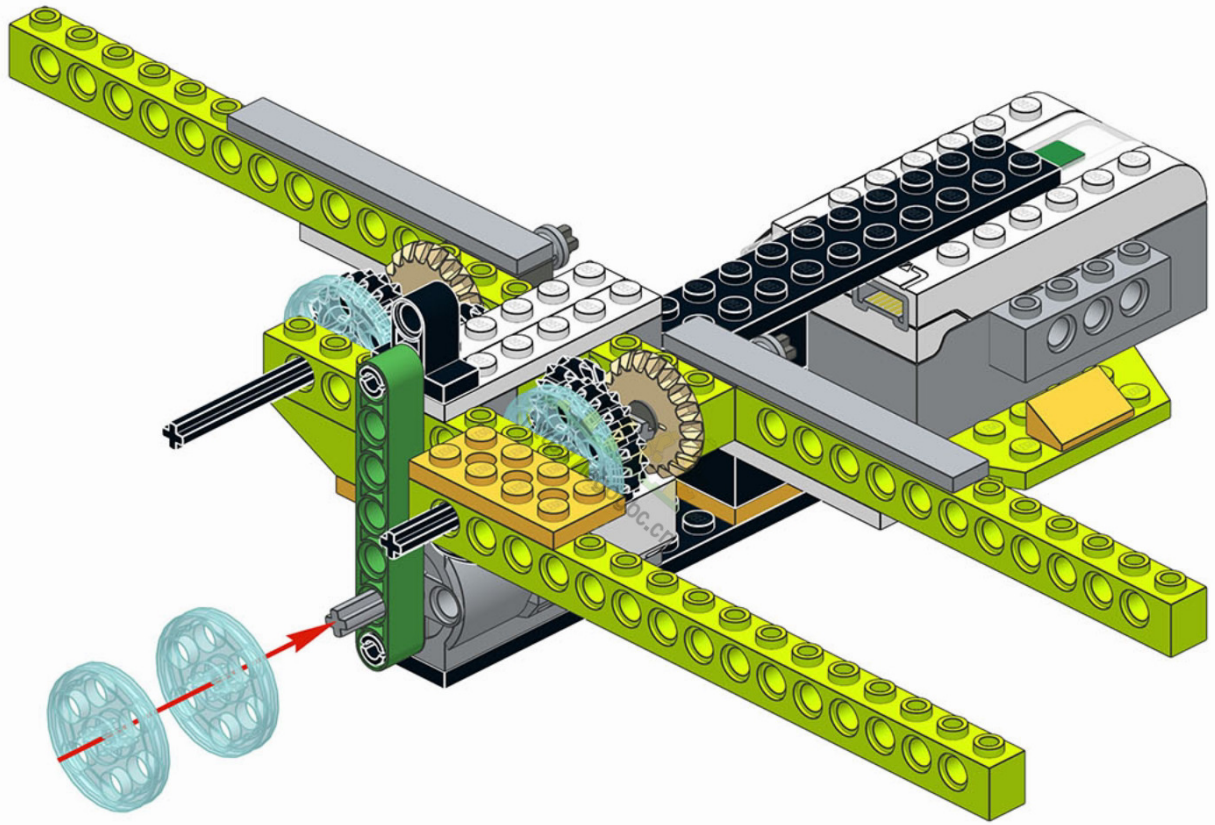

关注公众号获取更多

45

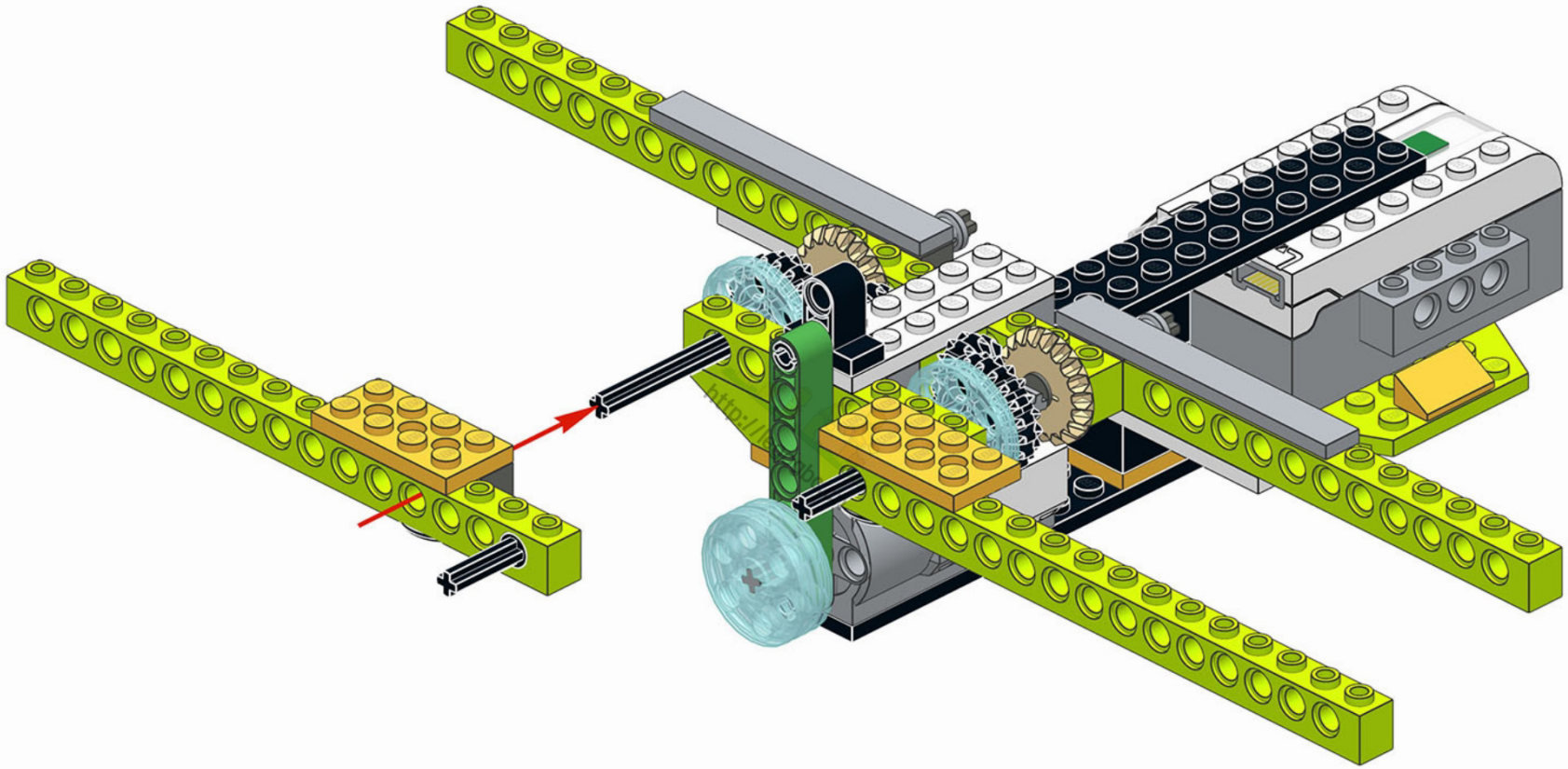

关注公众号获取更多

2x

46

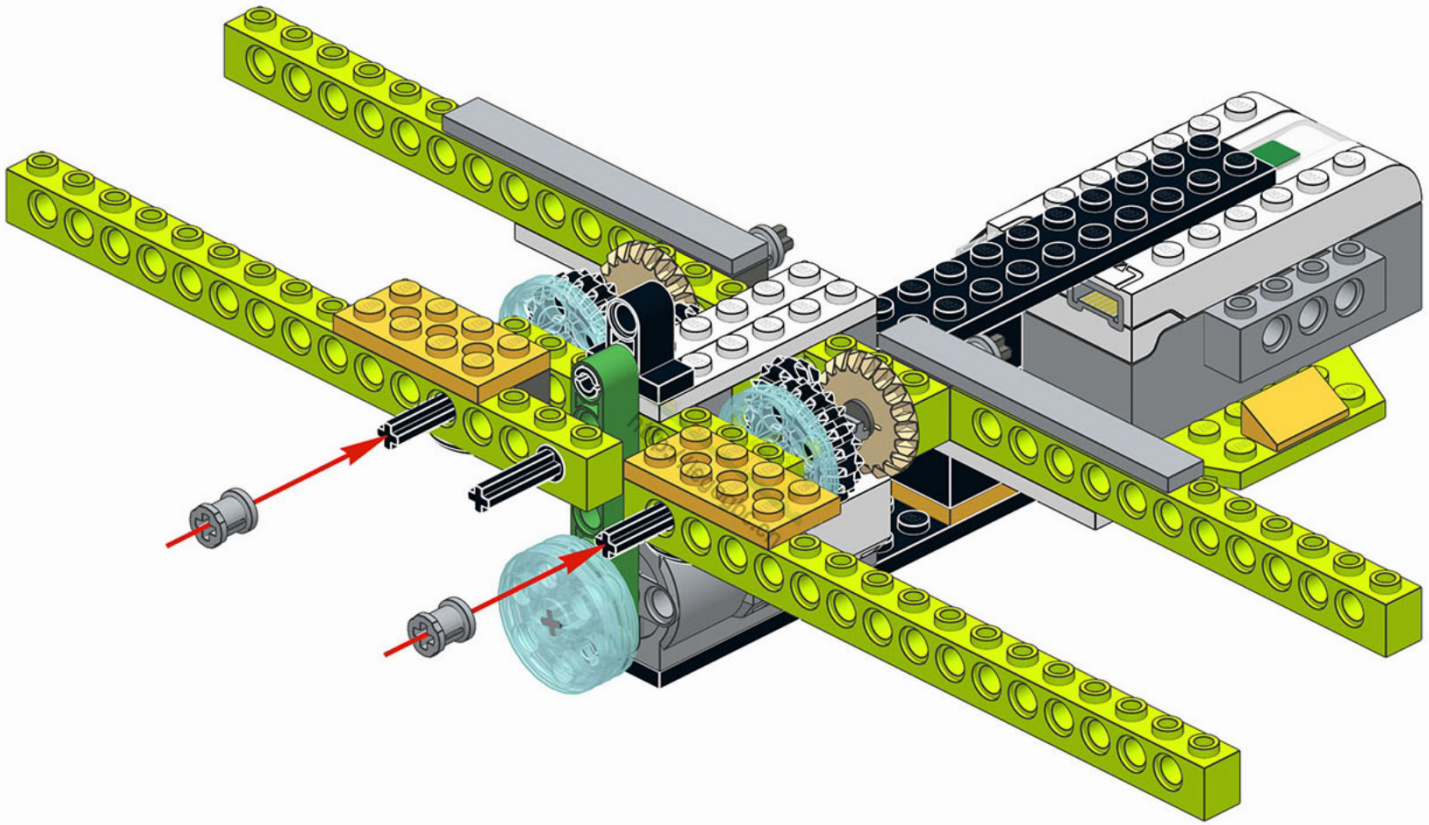

关注公众号获取更多

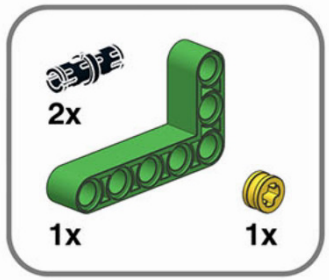

47

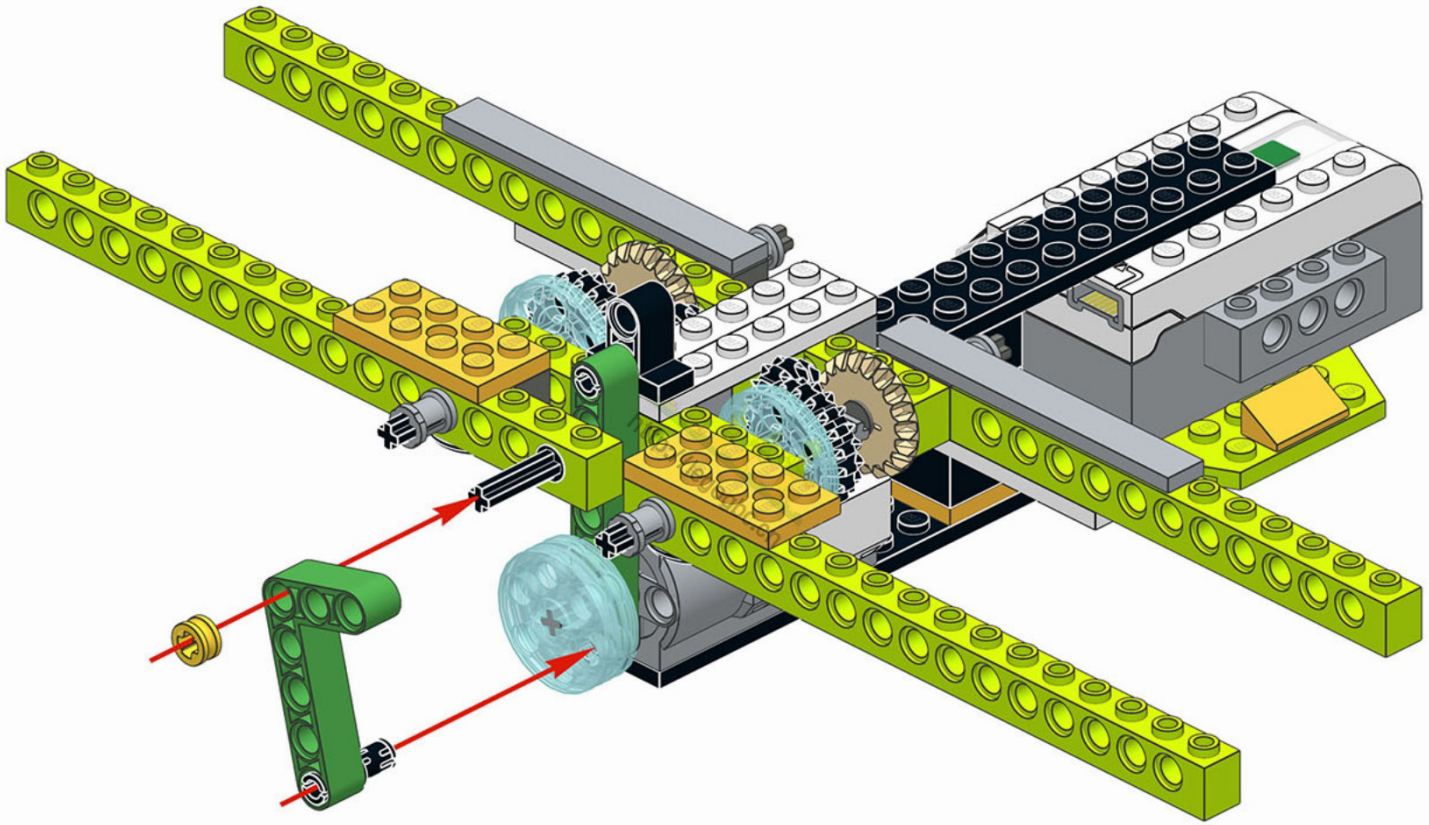

关注公众号获取更多

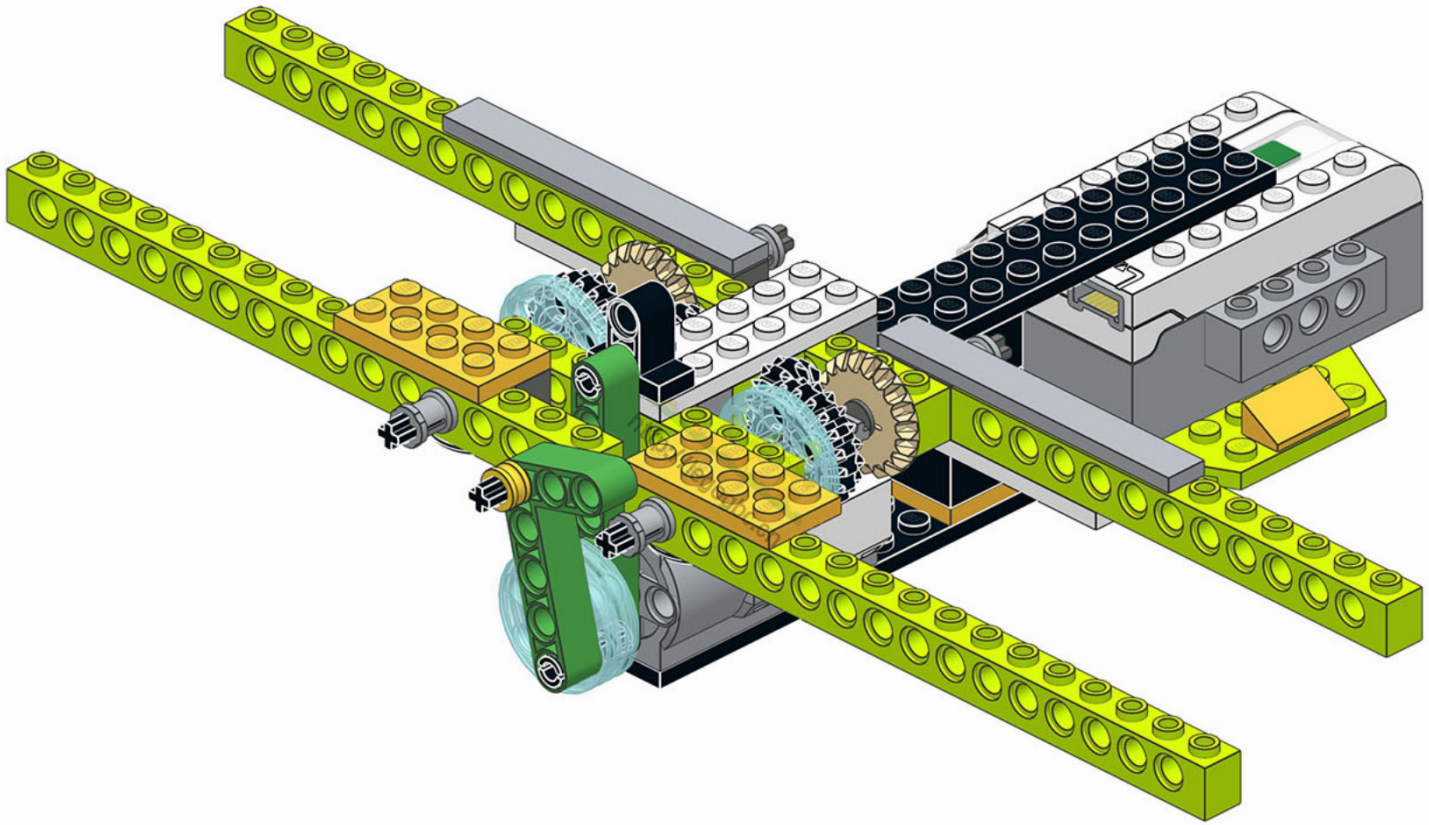

关注公众号获取更多

!

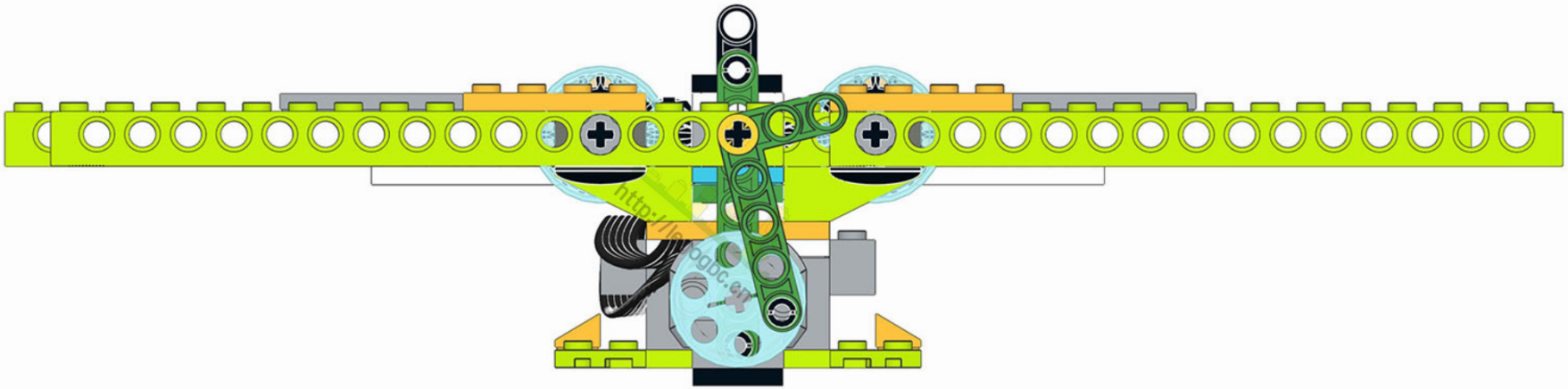

关注公众号获取更多

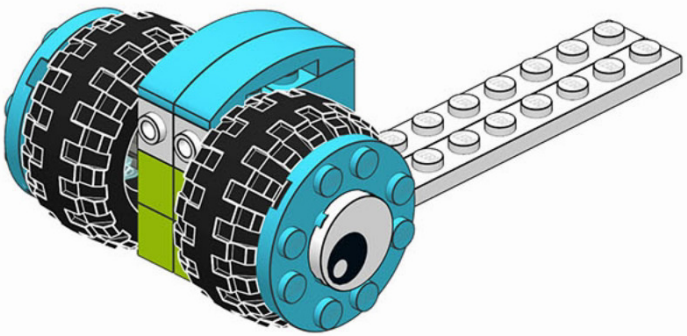

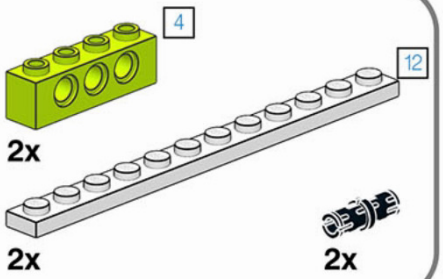

50

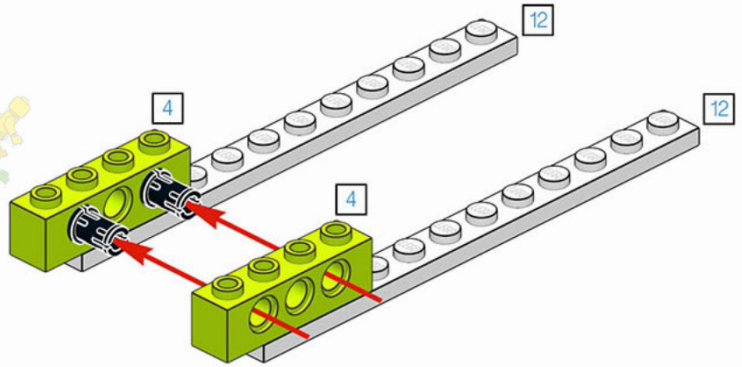

http://legogbc.cn

关注公众号获取更多

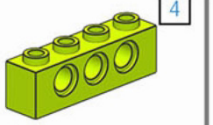

51

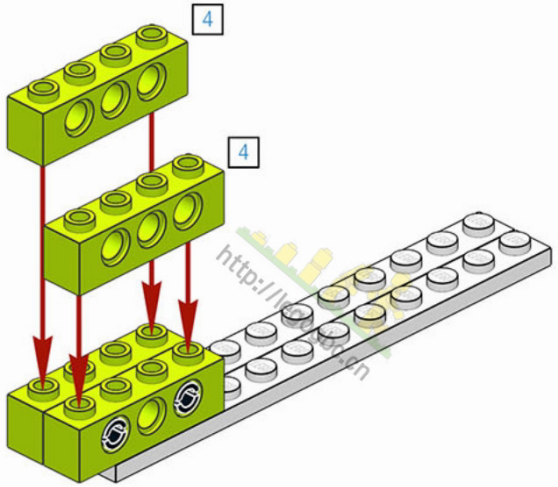

关注公众号获取更多

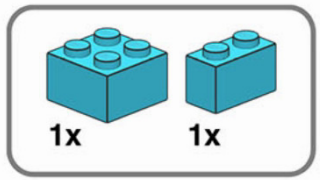

52

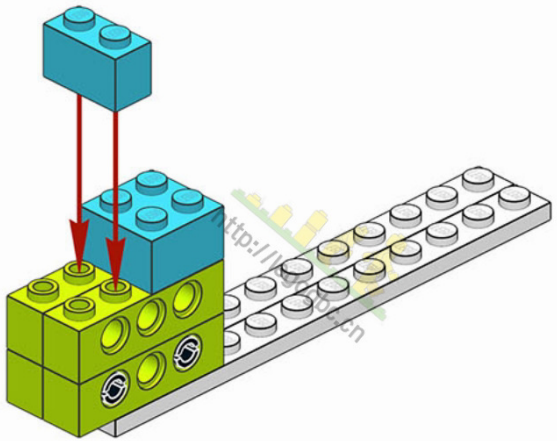

关注公众号获取更多

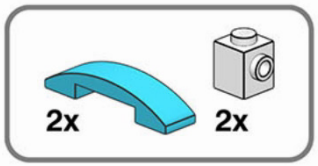

53

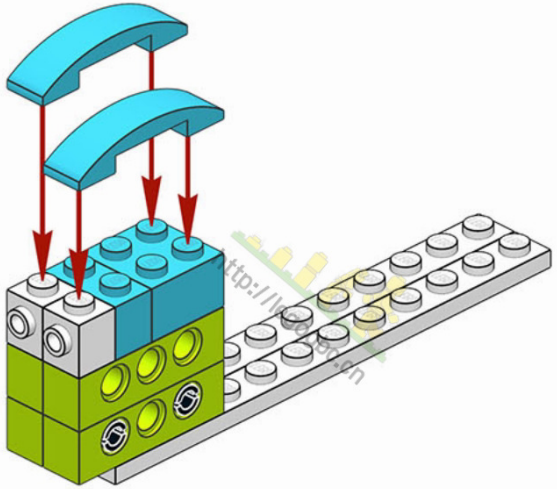

关注公众号获取更多

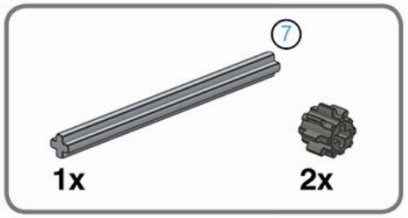

54

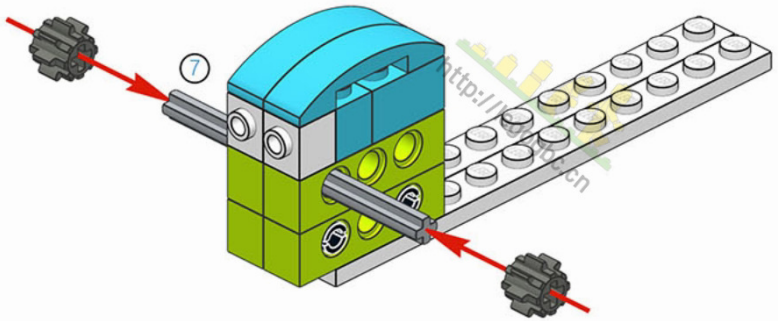

关注公众号获取更多

1x 1x

1

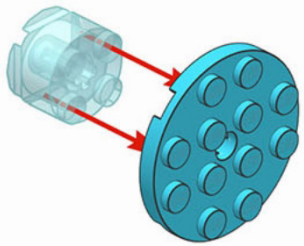

1x

2

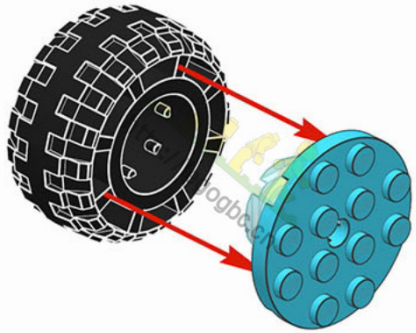

3

2x

关注公众号获取更多

56

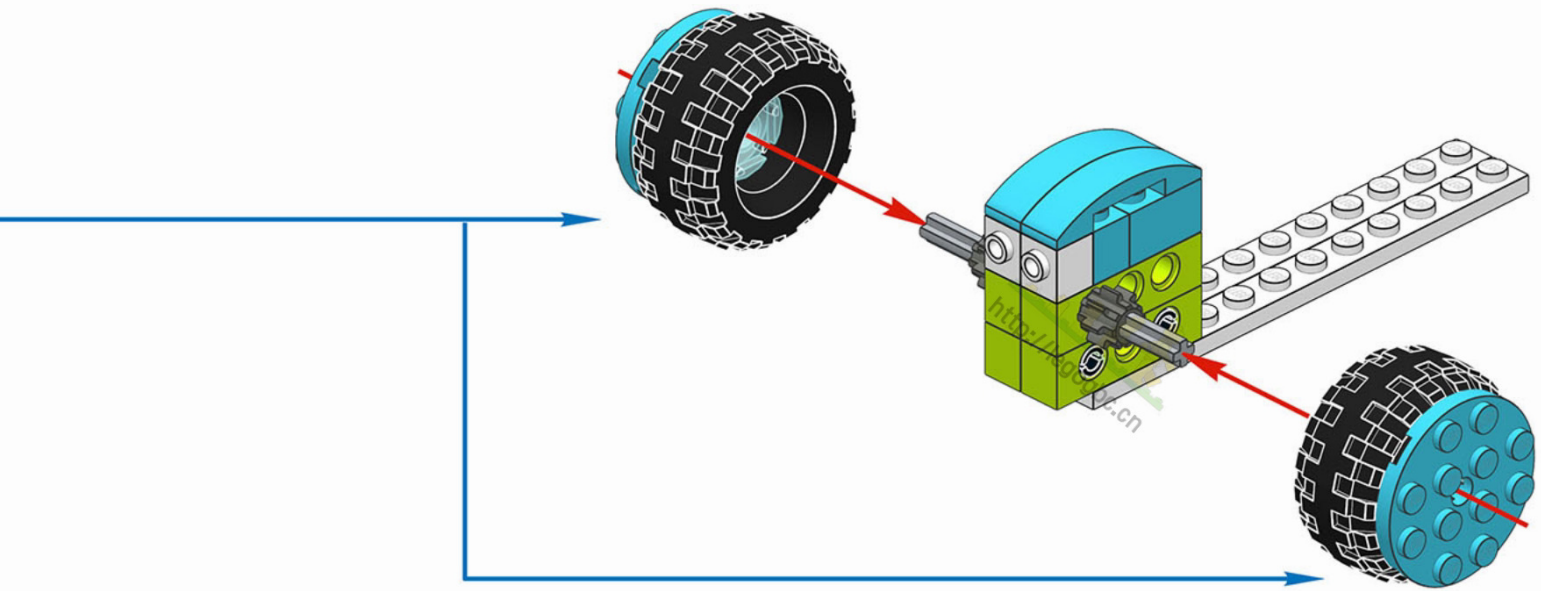

关注公众号获取更多

2x

57

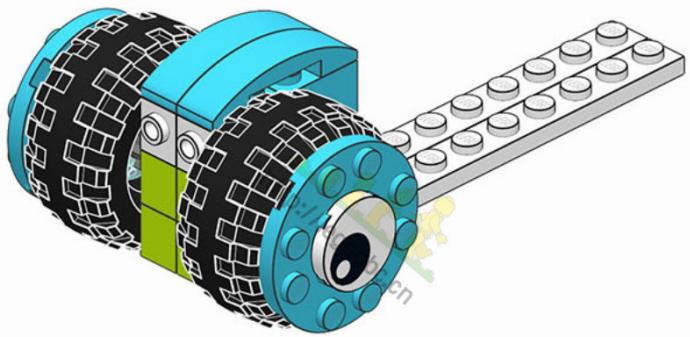

关注公众号获取更多

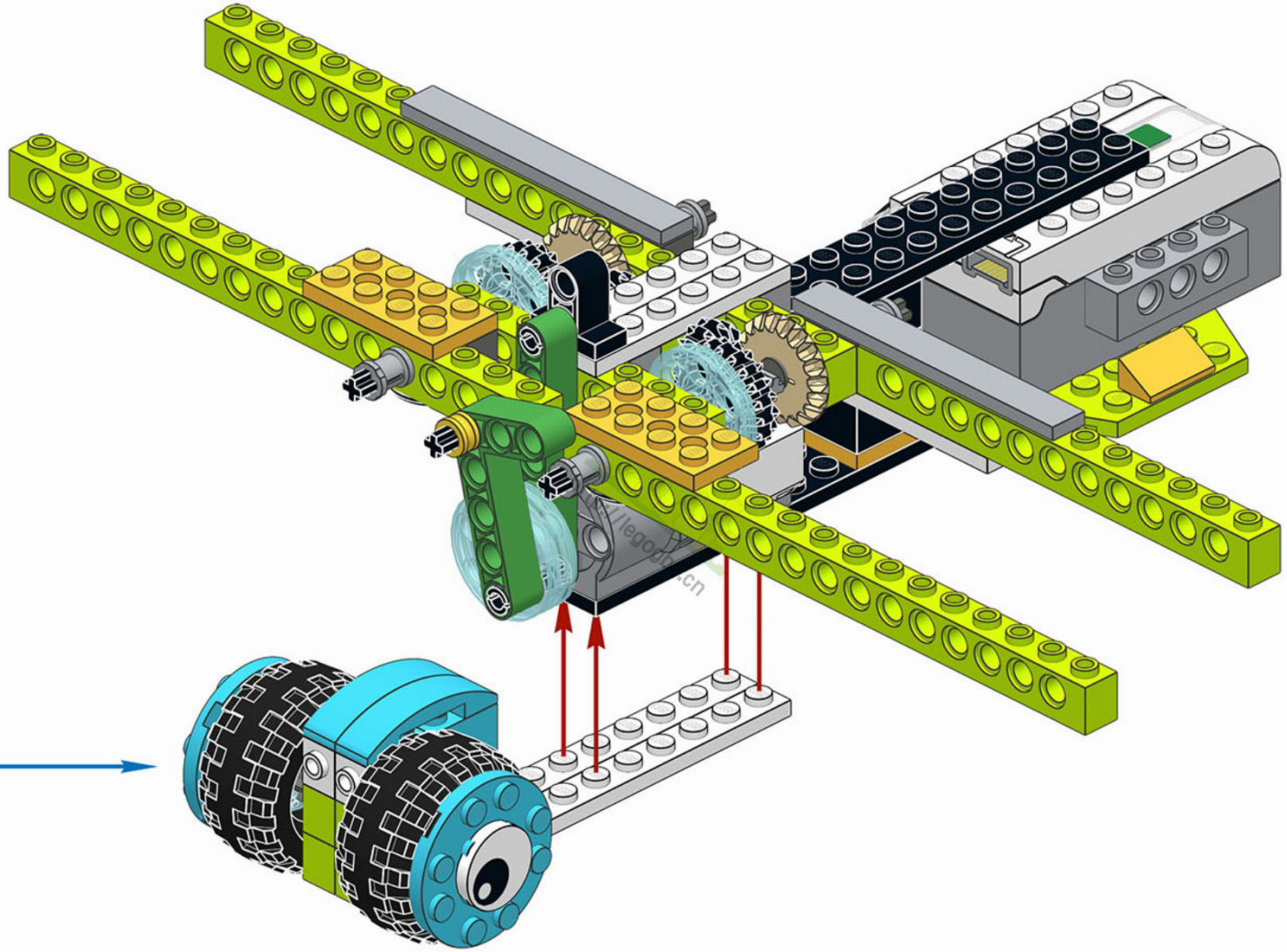

关注公众号获取更多

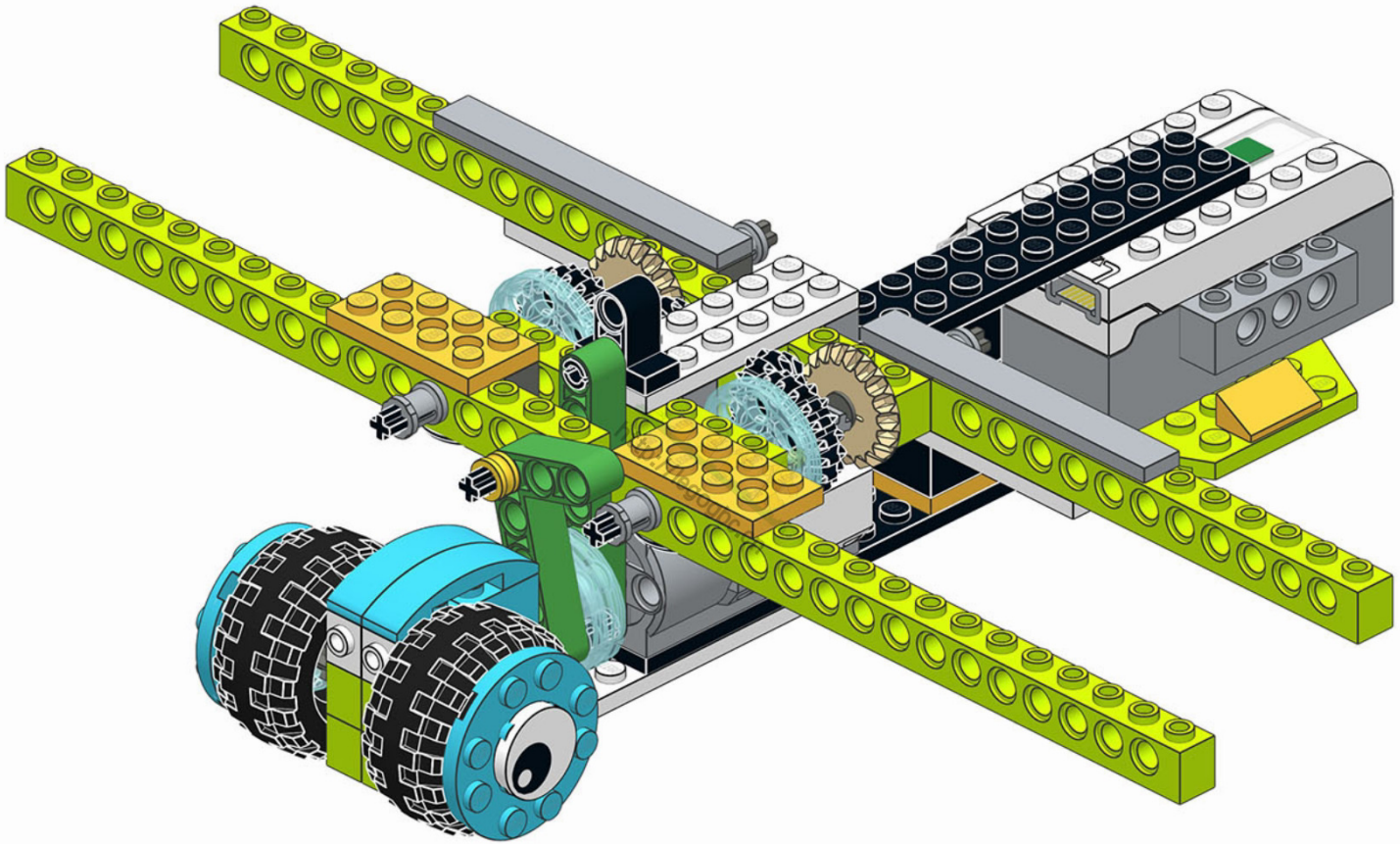

关注公众号获取更多

!

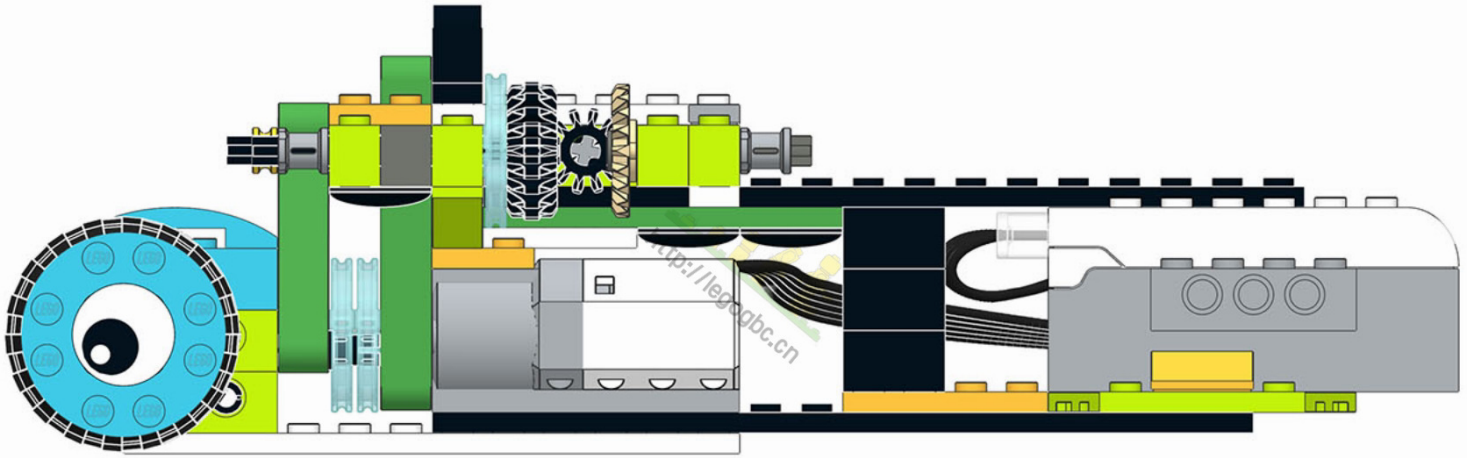

http://legobc.cn

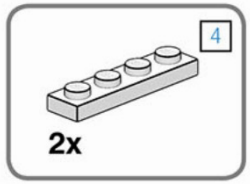

61

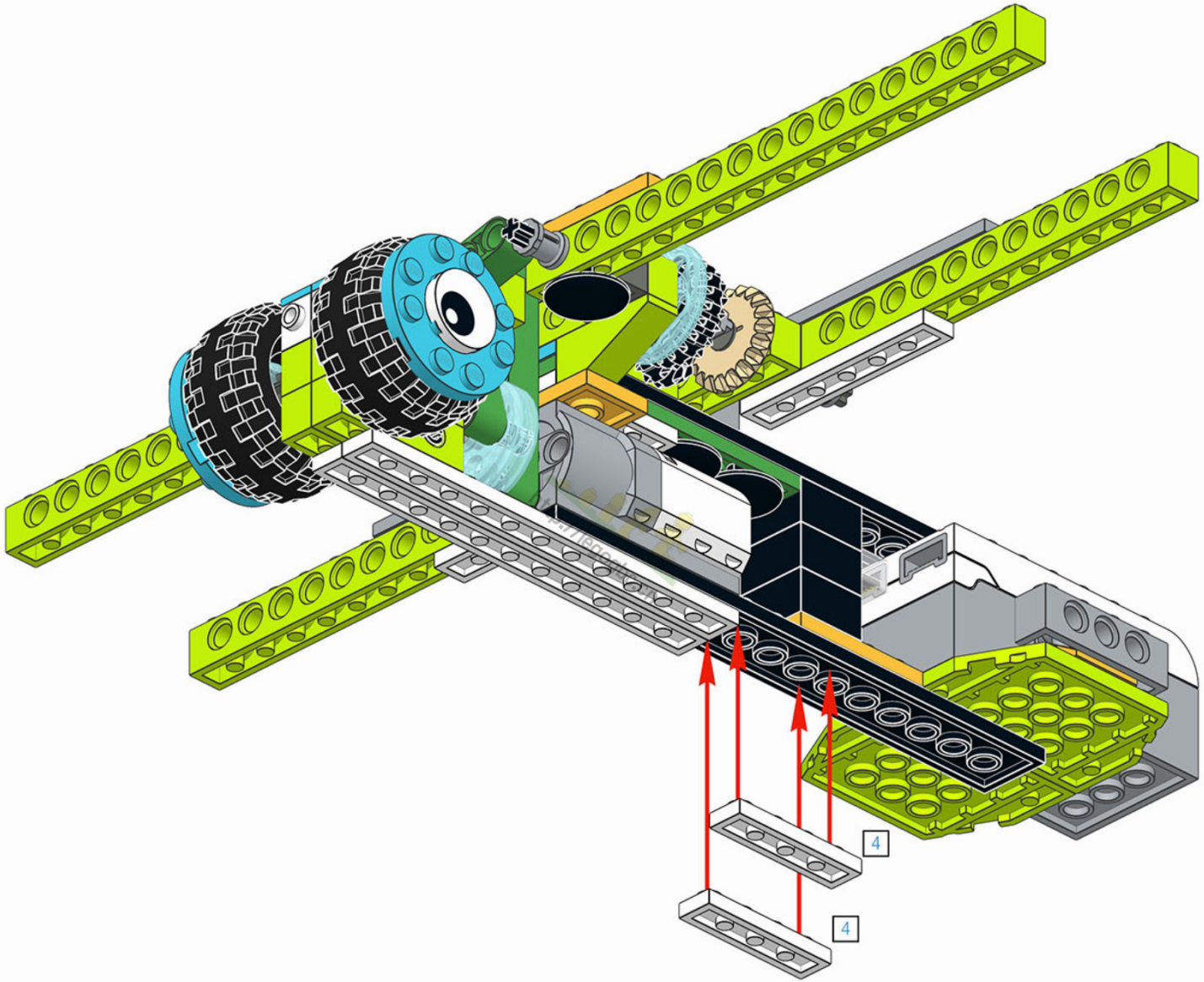

关注公众号获取更多

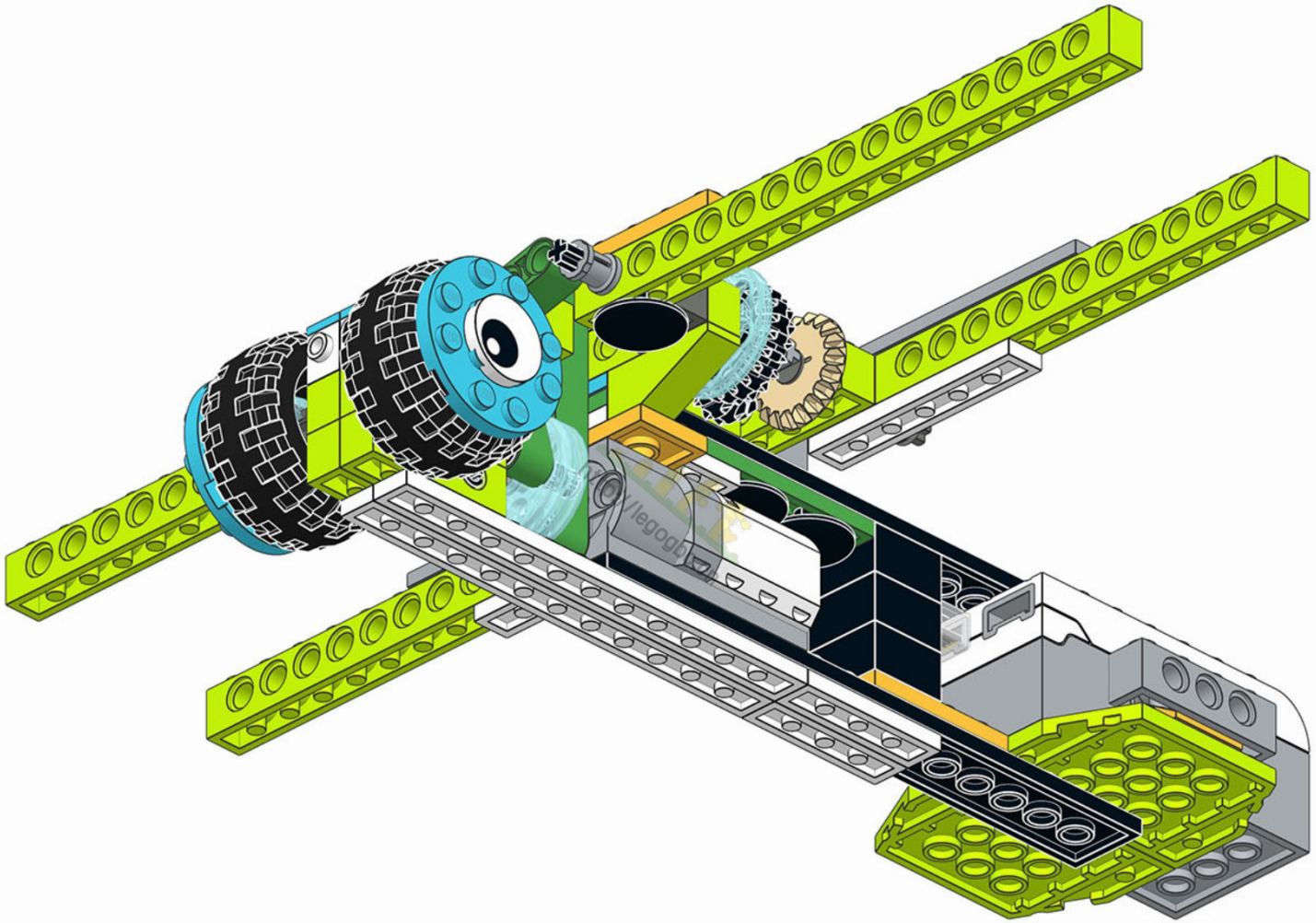

关注公众号获取更多

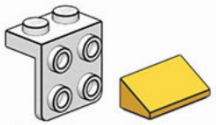

1

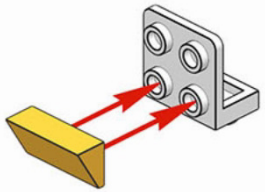

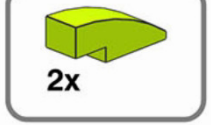

2

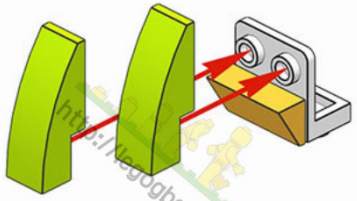

3

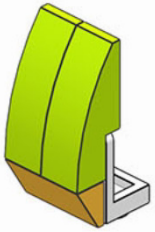

关注公众号获取更多

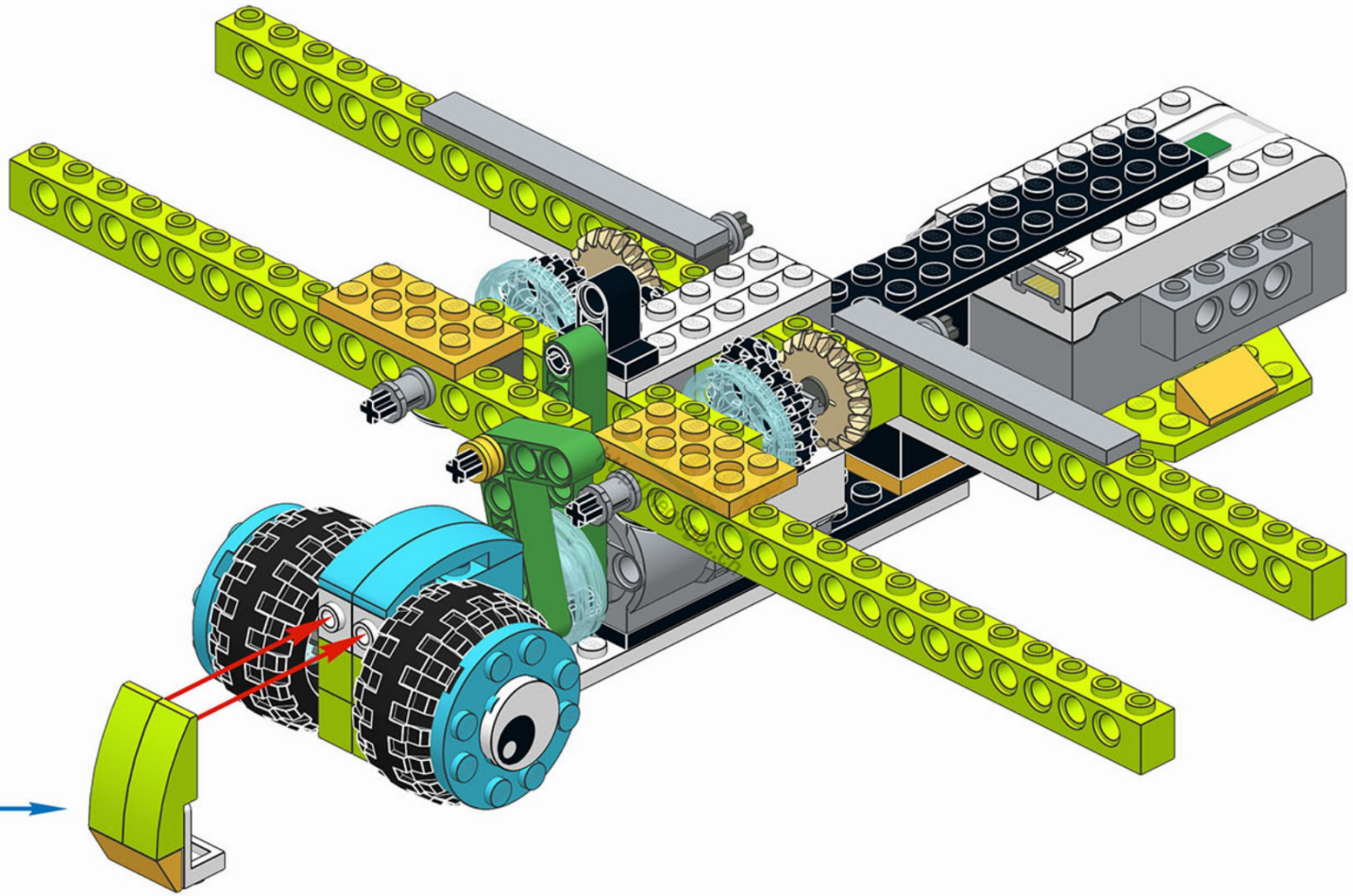

关注公众号获取更多

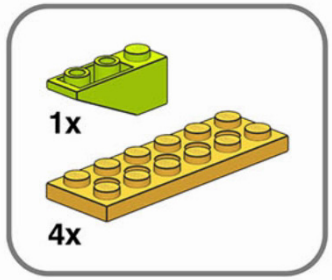

65

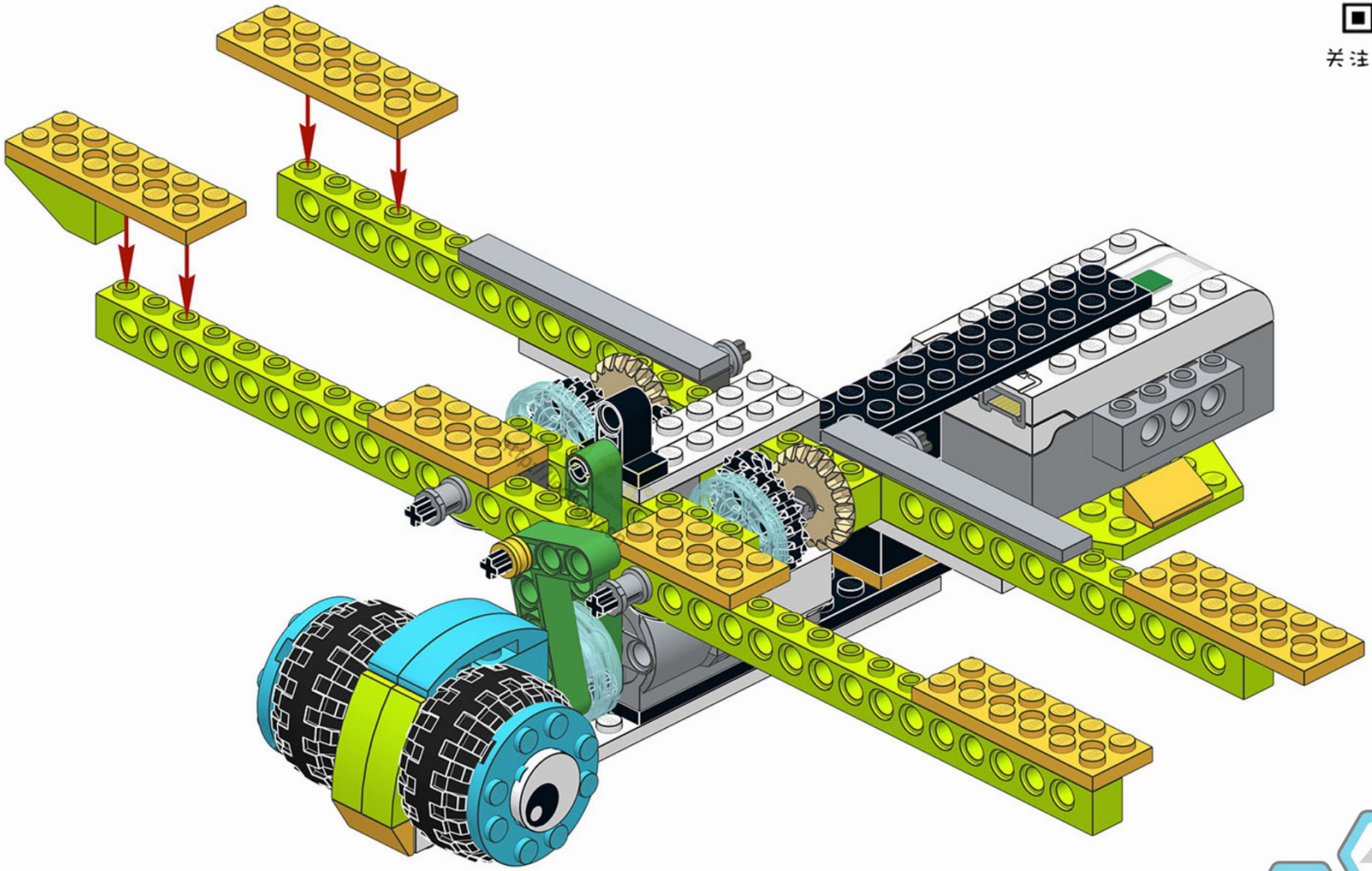

关注公众号获取更多

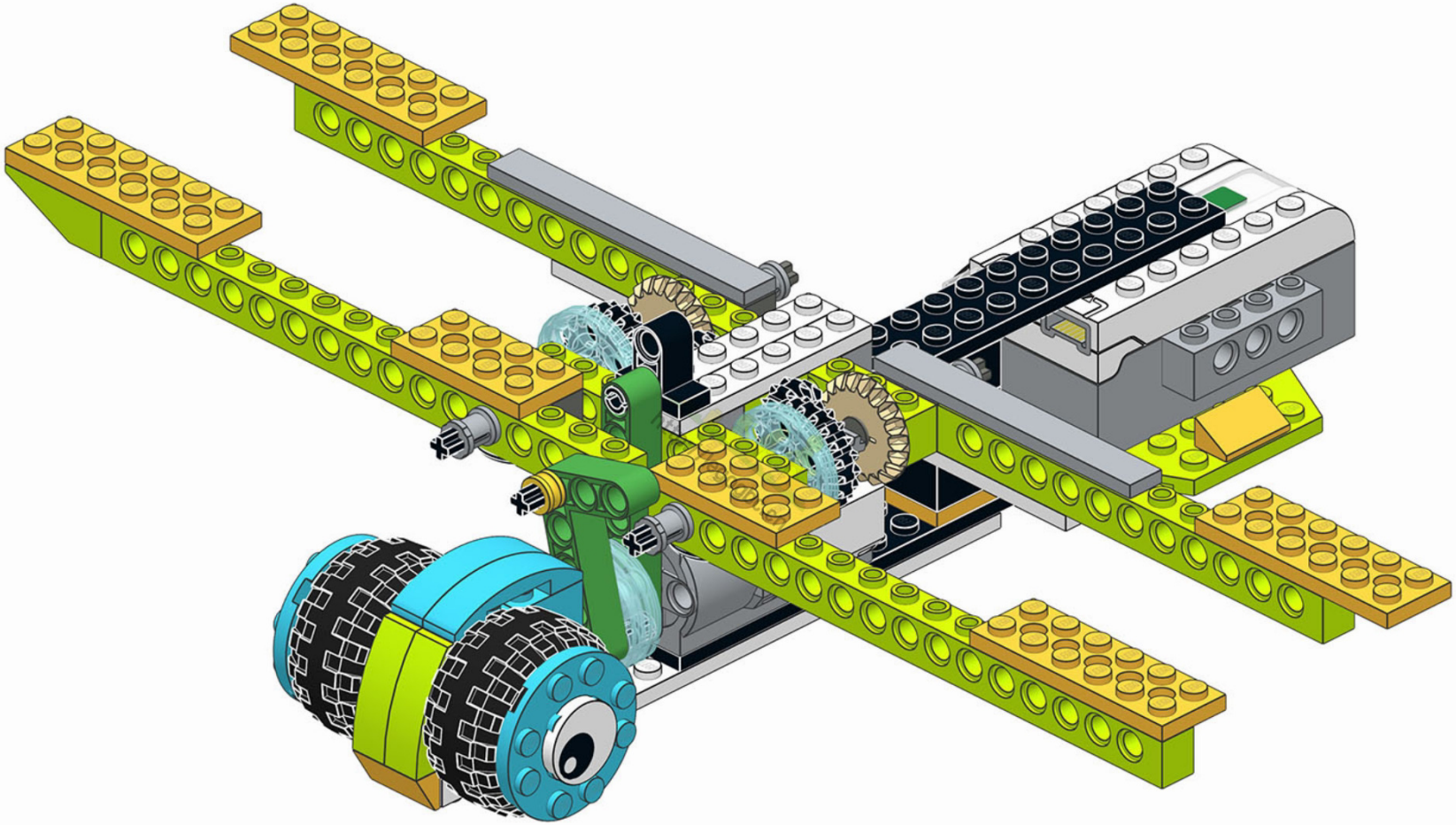

Enhanced version

关注公众号获取更多

Add the legs and parts of the trunk for greater similarity to the real Meganeura.

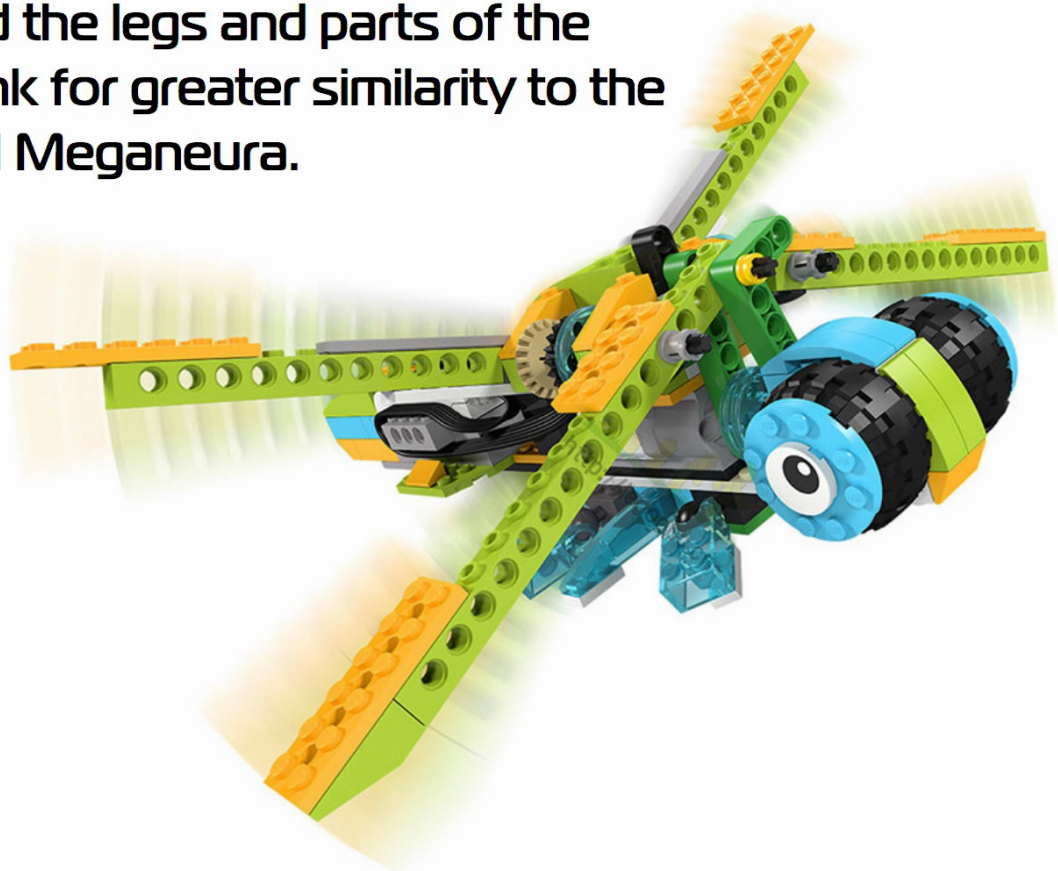

Meganeura

关注公众号获取更多

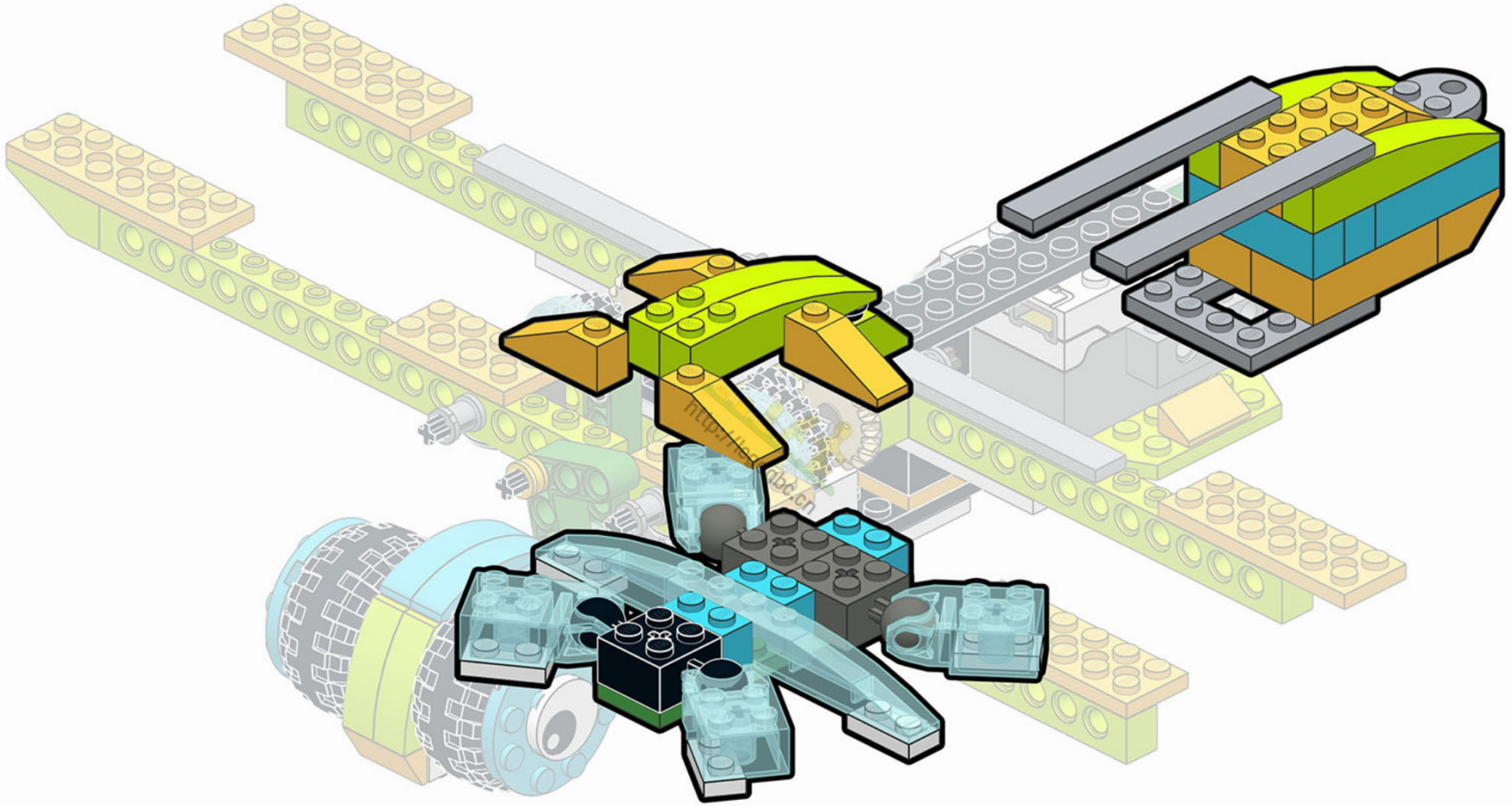

关注公众号获取更多

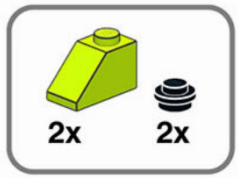

67

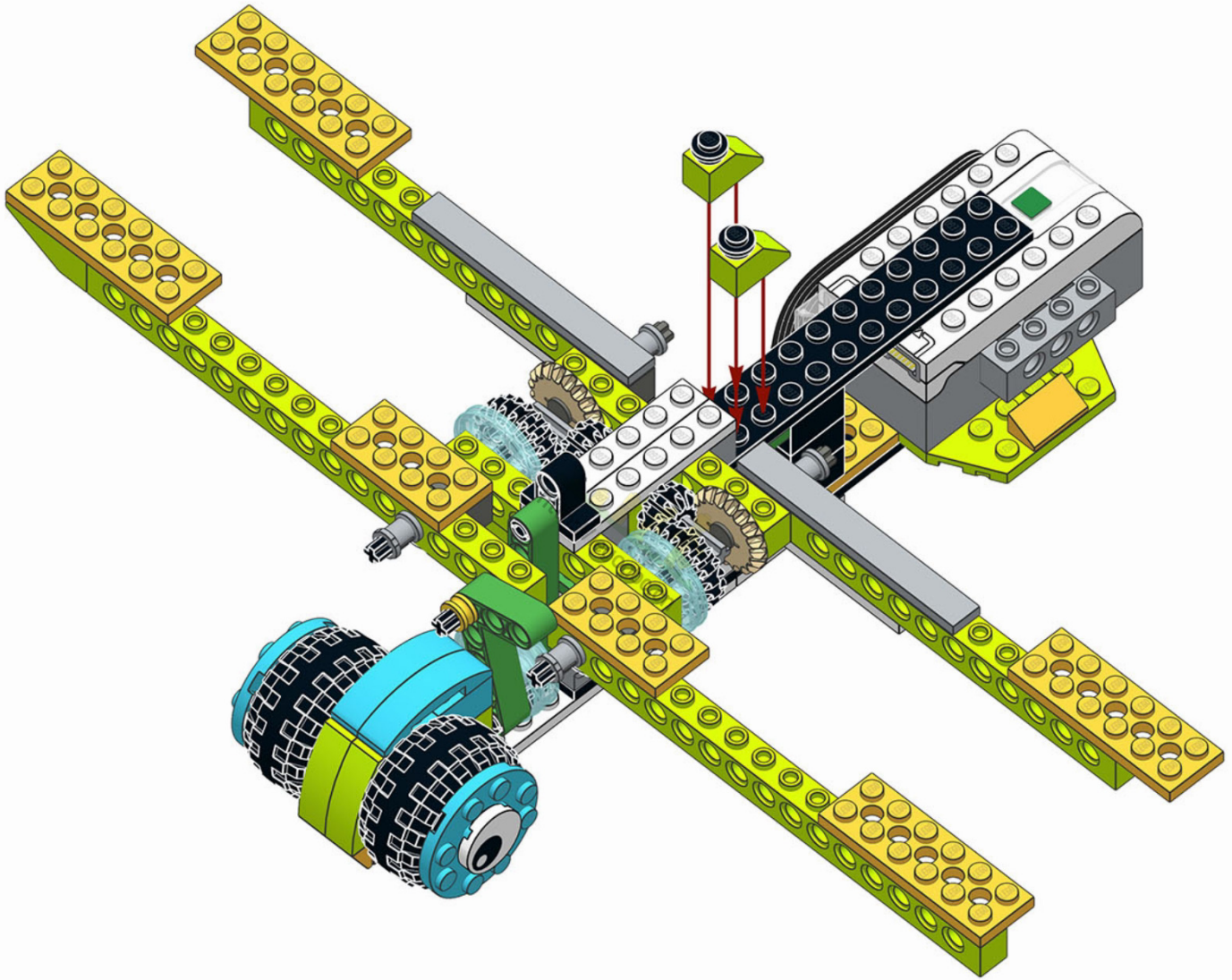

关注公众号获取更多

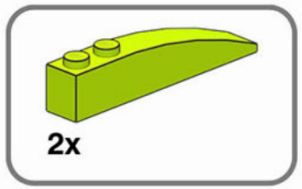

68

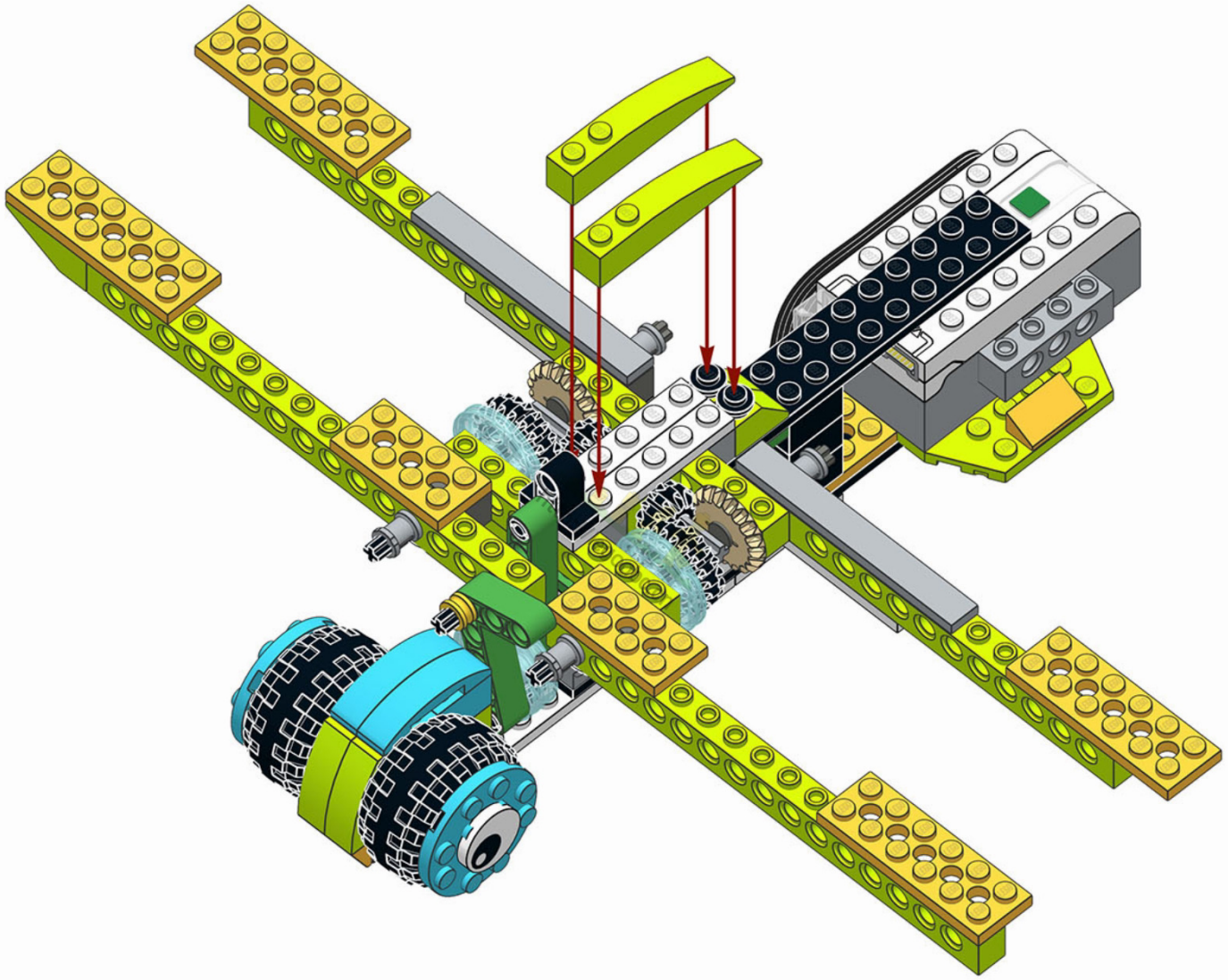

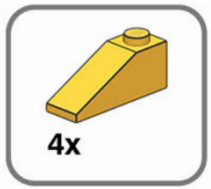

69

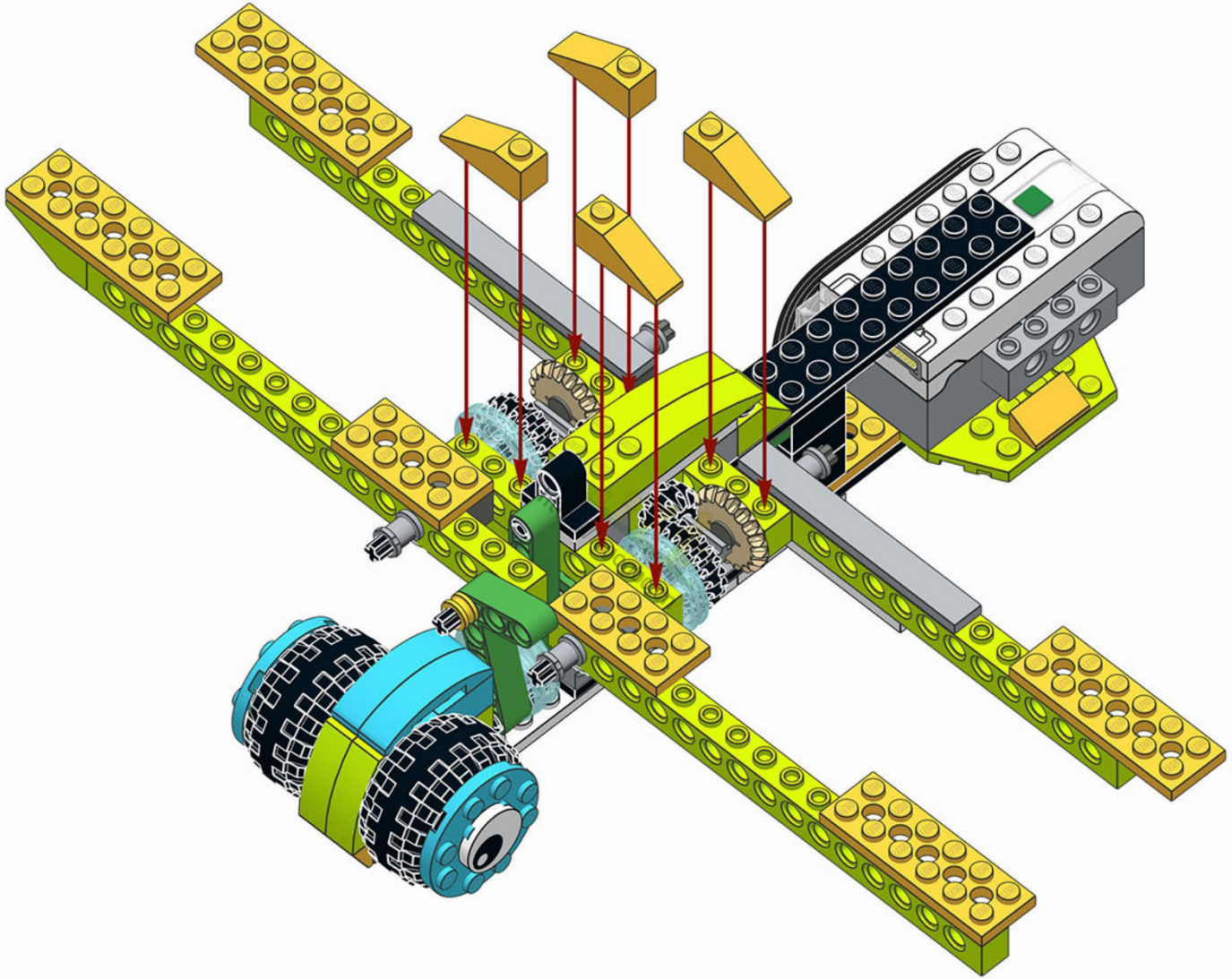

关注公众号获取更多

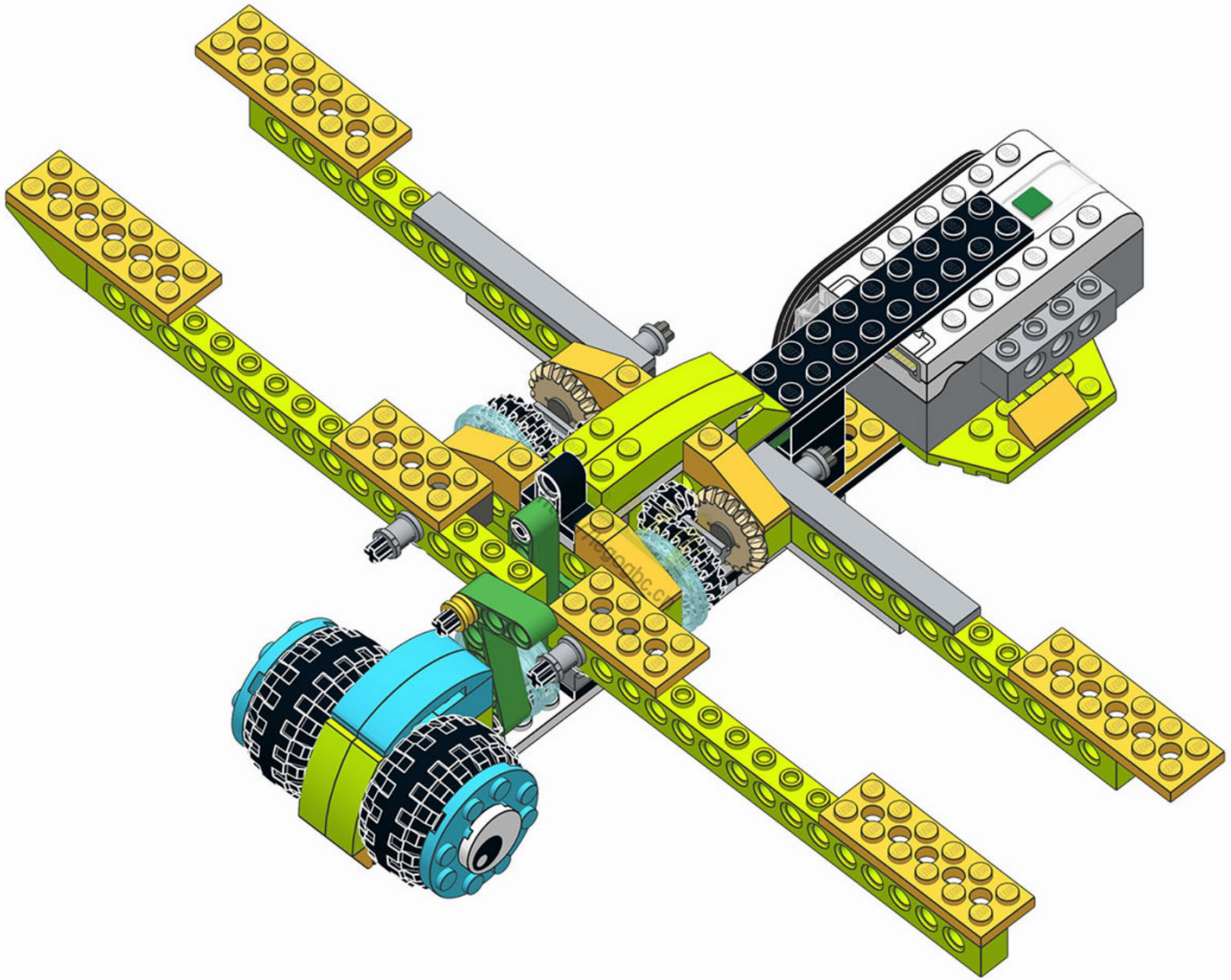

关注公众号获取更多

关注公众号获取更多

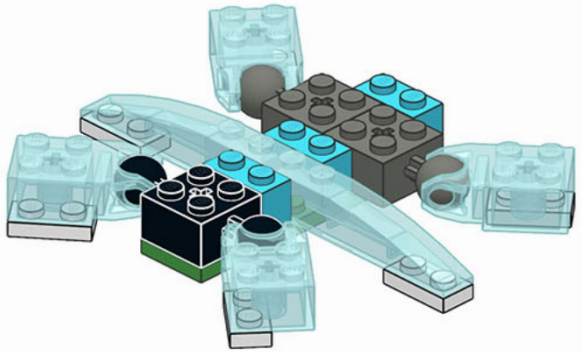

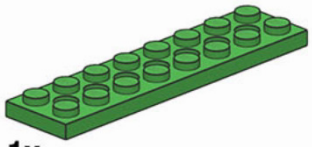

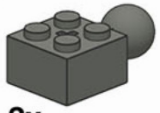

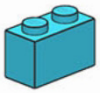

71

http://legogbc.cn

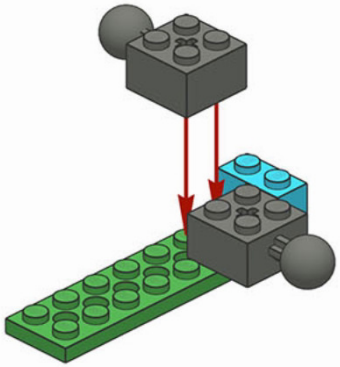

关注公众号获取更多

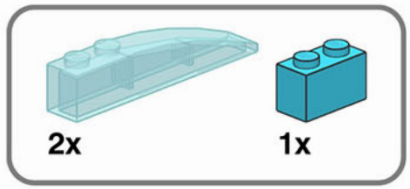

72

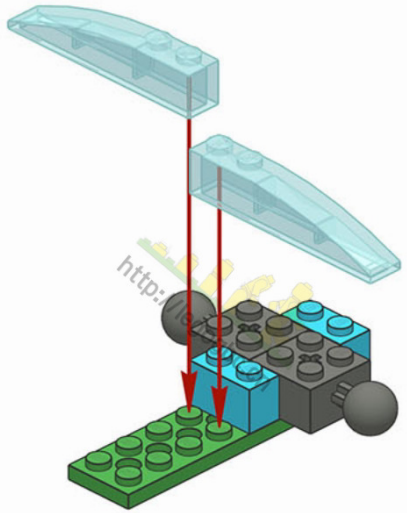

关注公众号获取更多

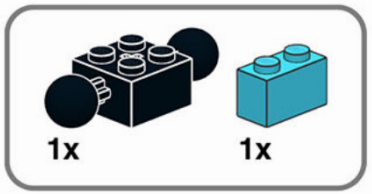

73

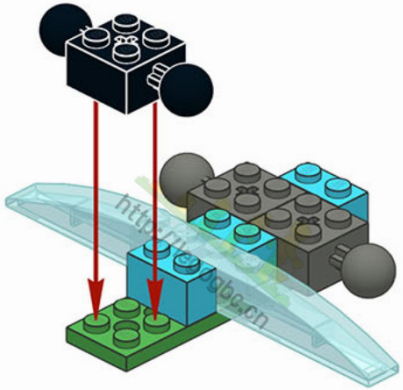

关注公众号获取更多

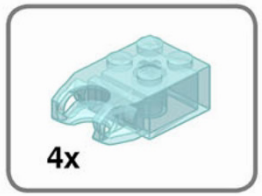

74

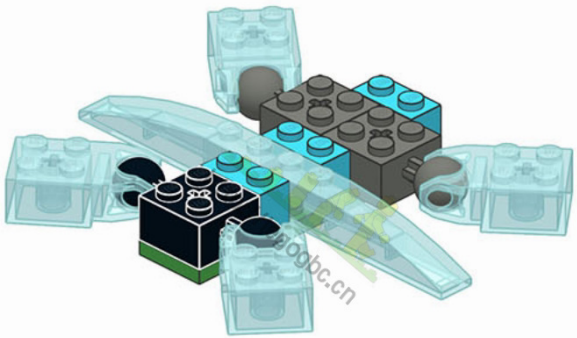

关注公众号获取更多

6x

75

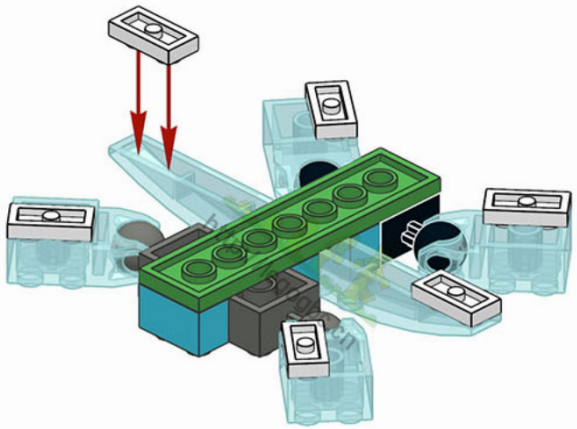

关注公众号获取更多

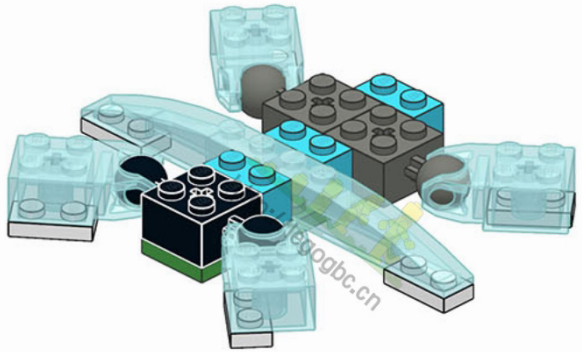

关注公众号获取更多

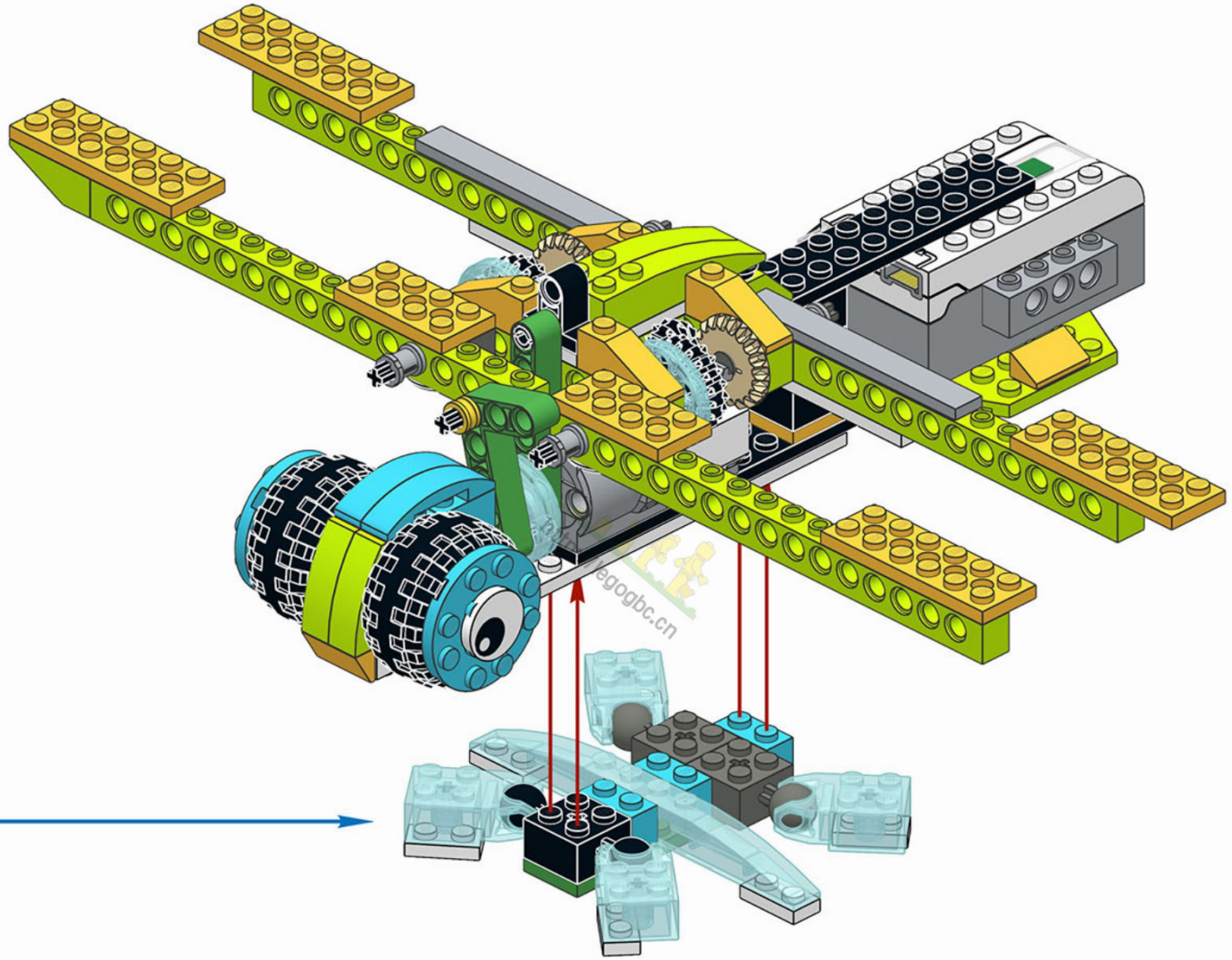

关注公众号获取更多

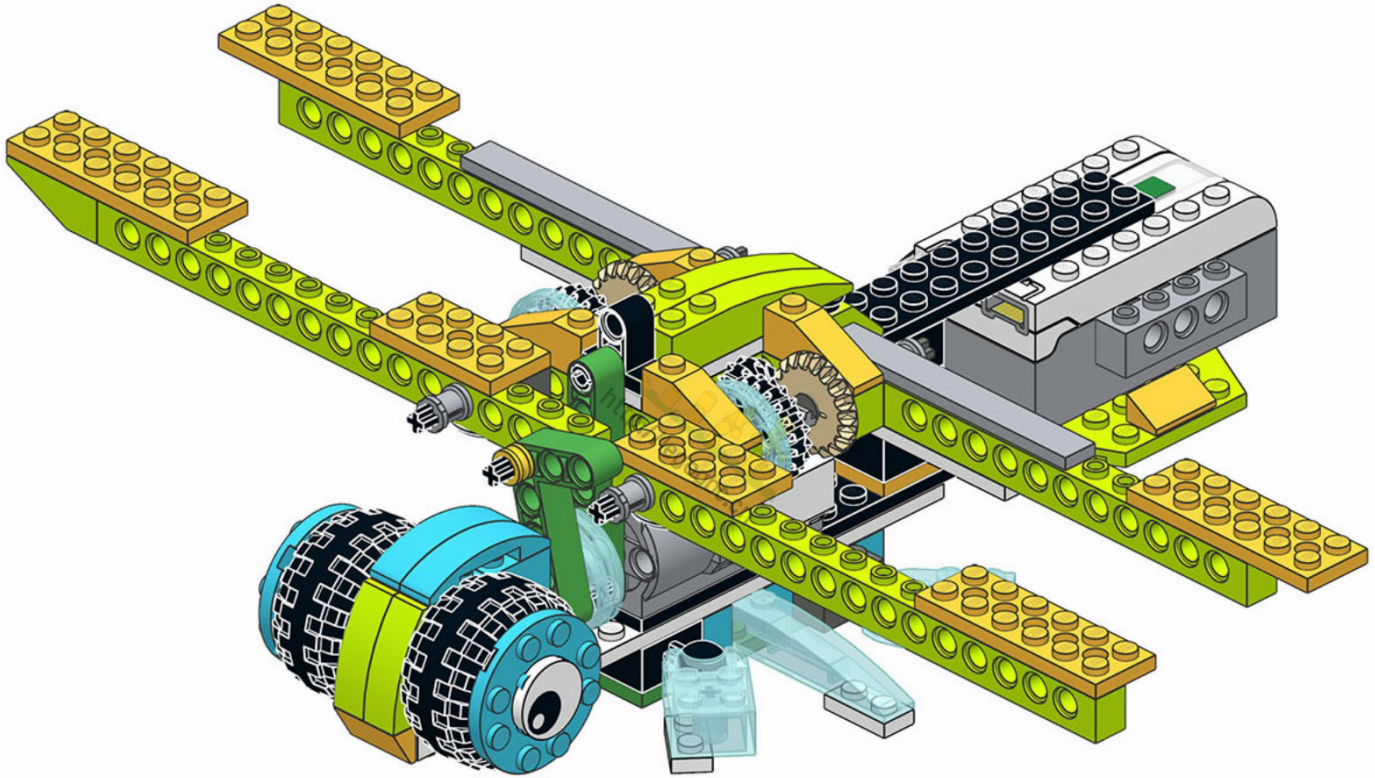

关注公众号获取更多

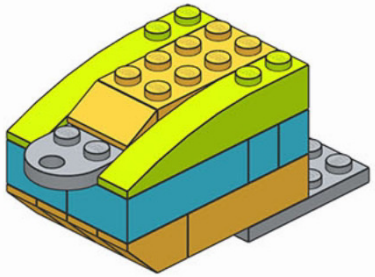

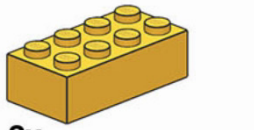

79

http://legogbc.cn

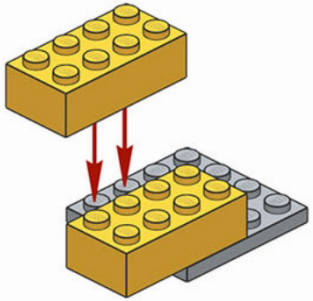

关注公众号获取更多

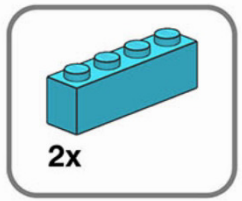

80

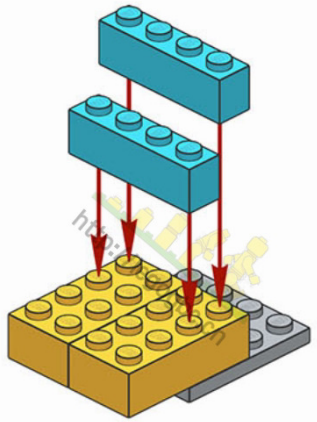

关注公众号获取更多

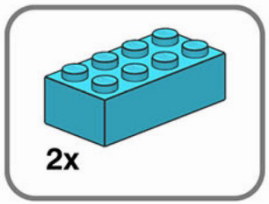

81

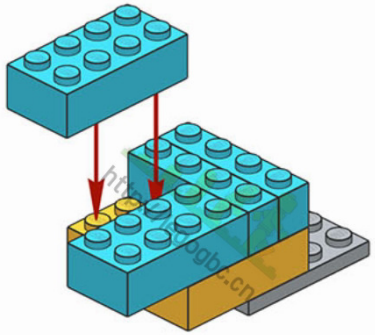

关注公众号获取更多

4x

82

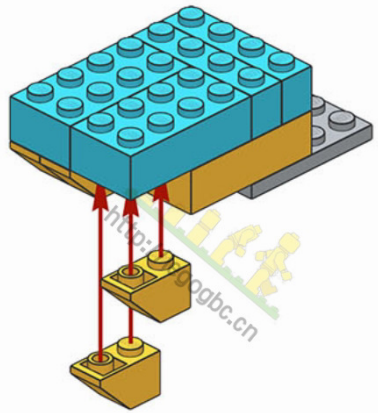

关注公众号获取更多

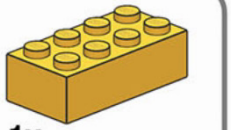

83

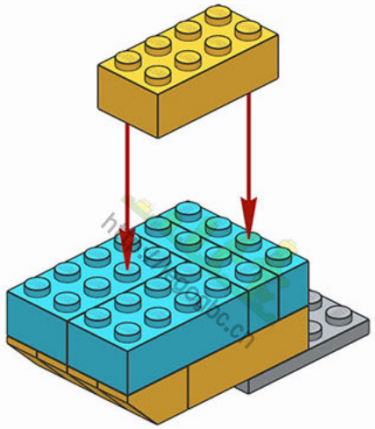

关注公众号获取更多

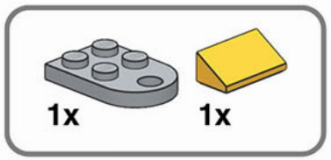

84

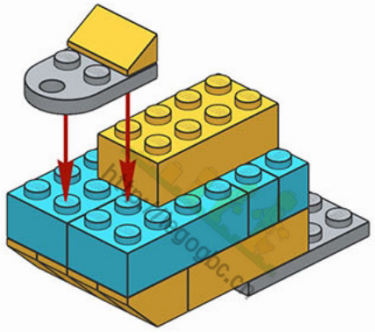

关注公众号获取更多

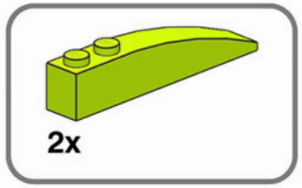

85

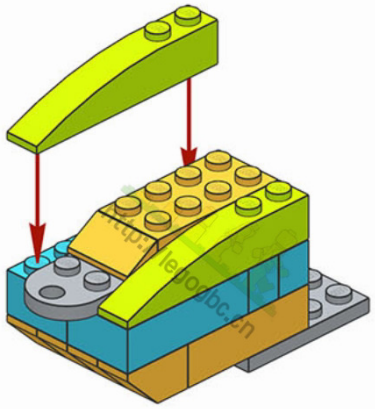

关注公众号获取更多

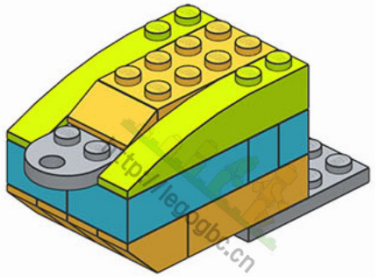

关注公众号获取更多

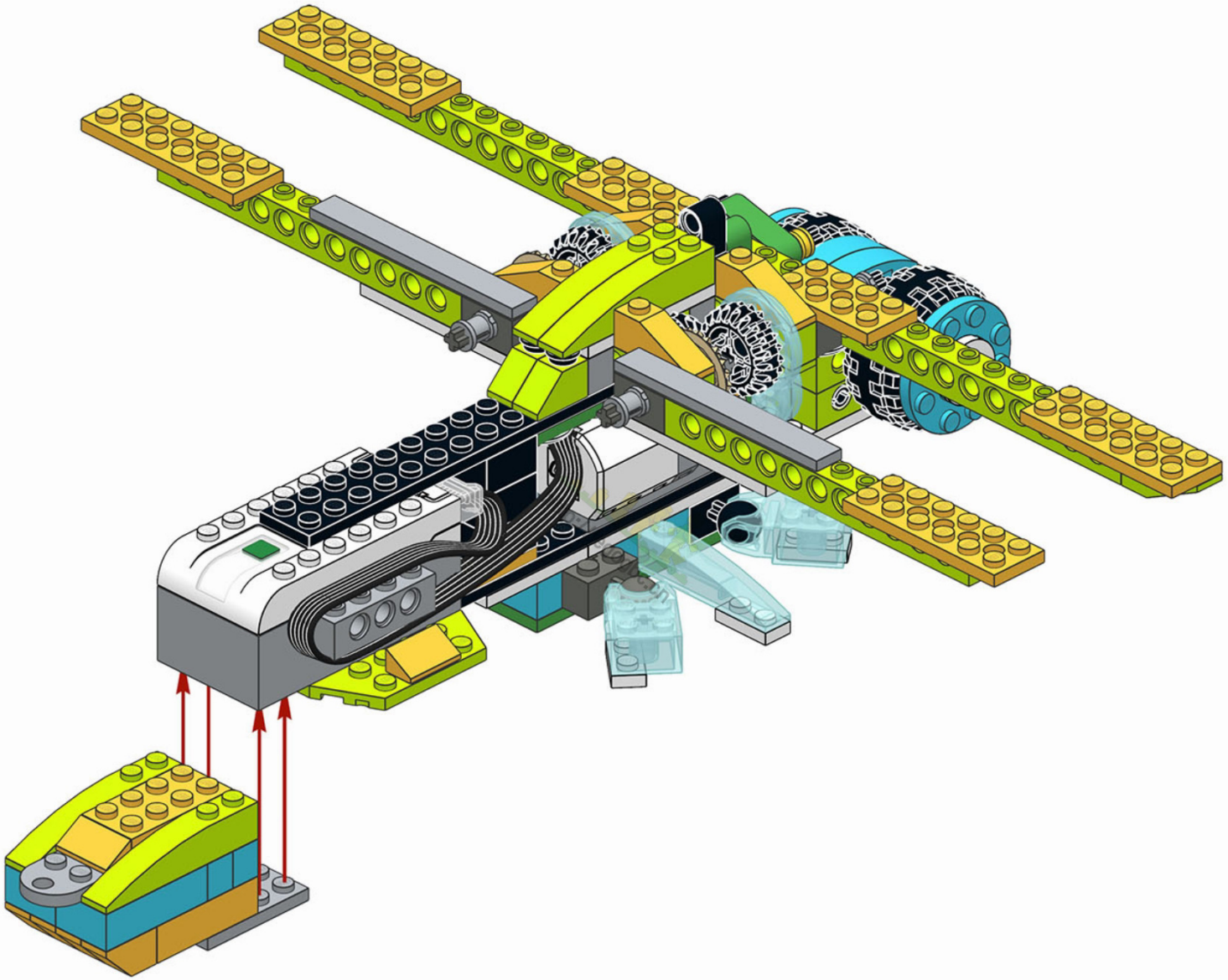

关注公众号获取更多

2x

88

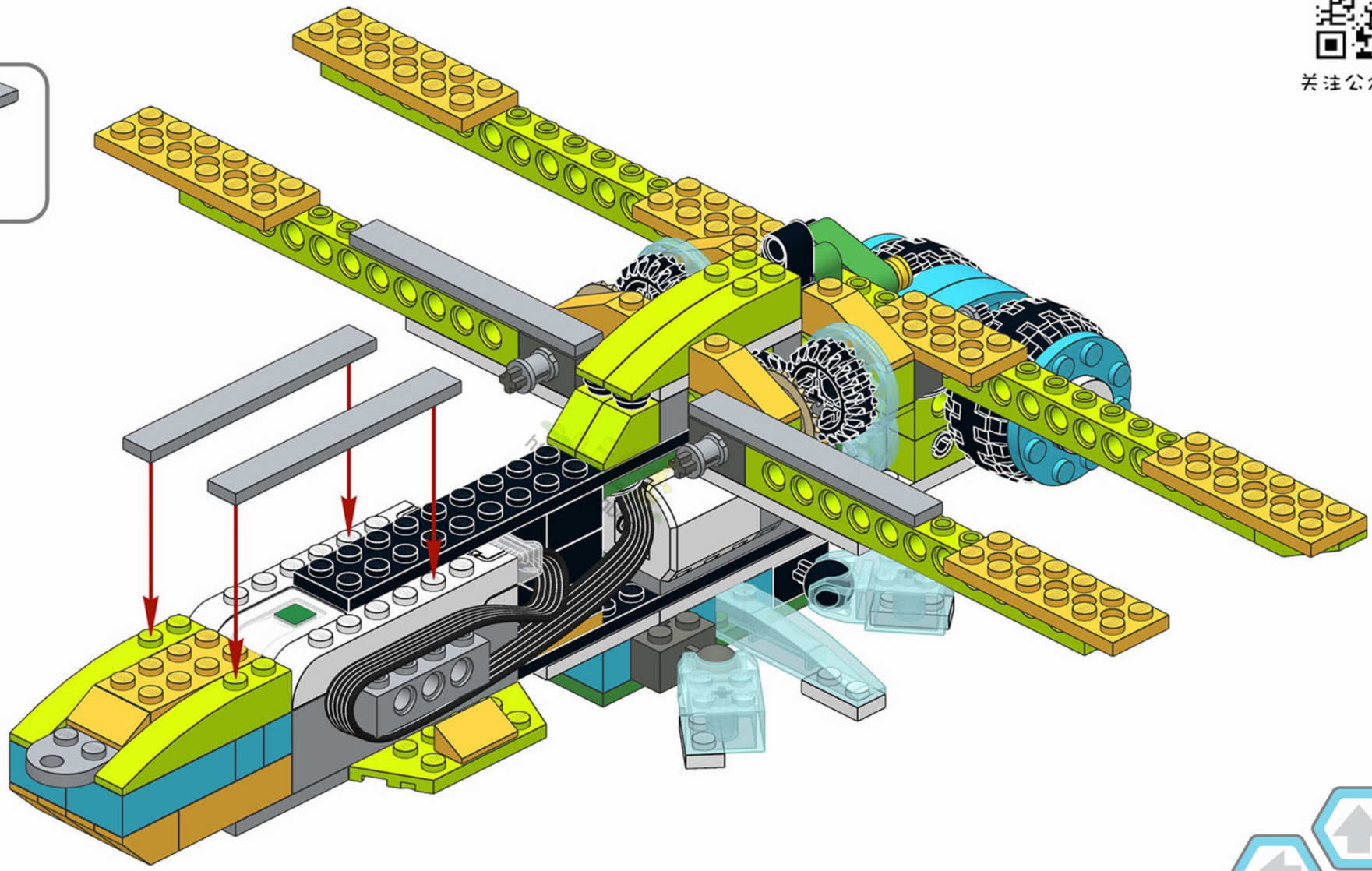

关注公众号获取更多

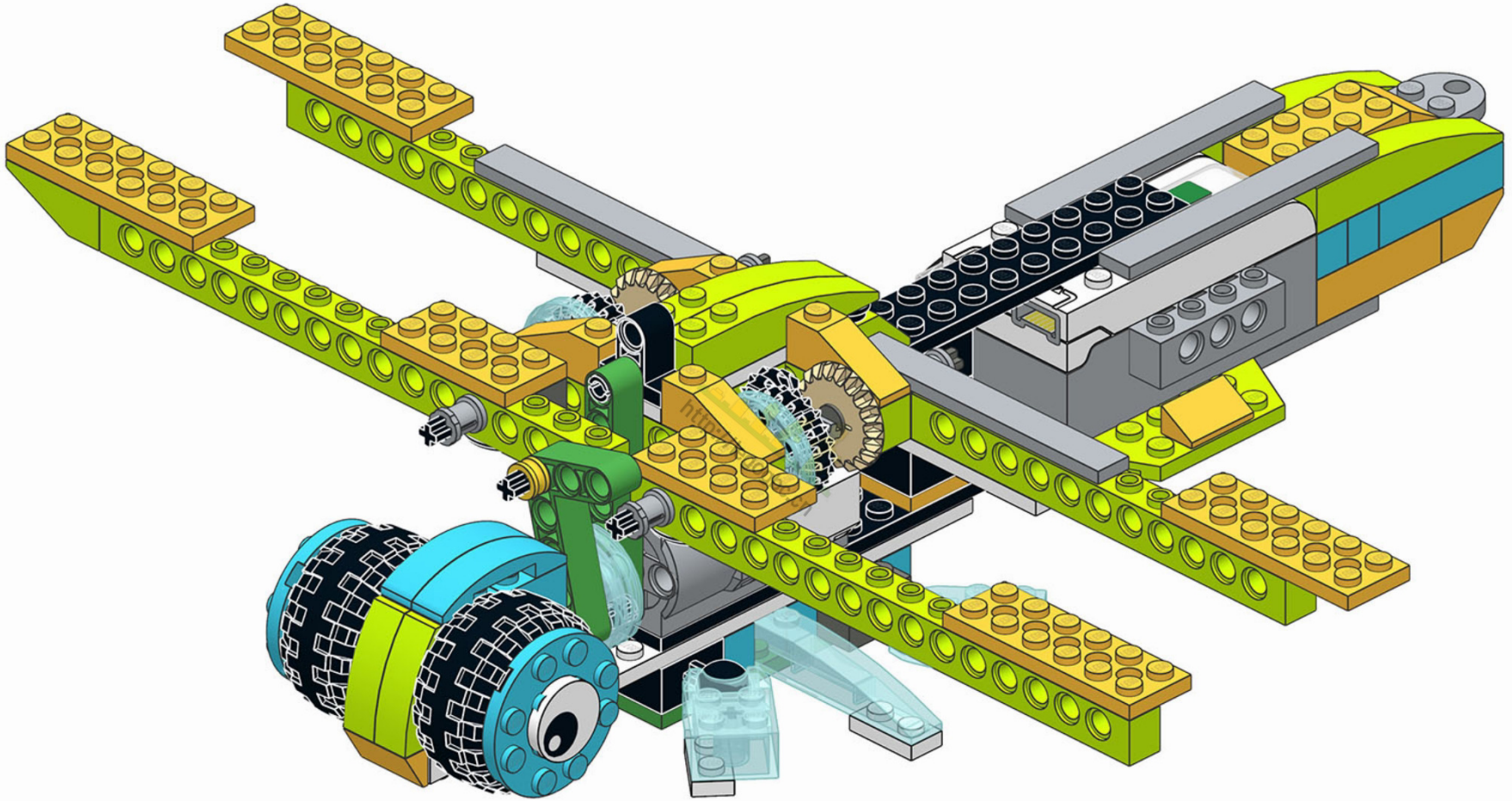

Check it out!

关注公众号获取更多

Avoid any friction between the cables while wings are moving.

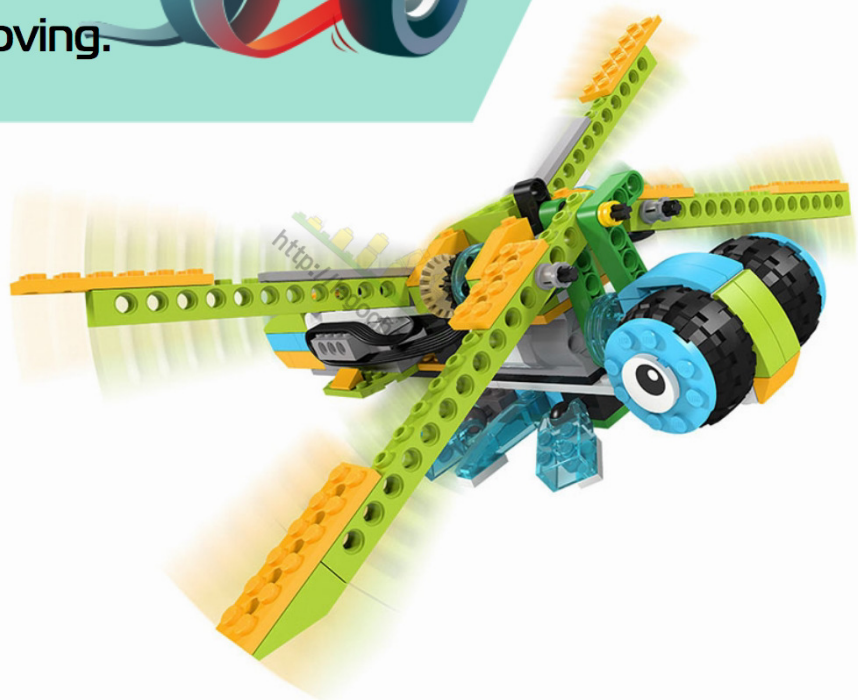

Task

Place parts of the robot on the right places

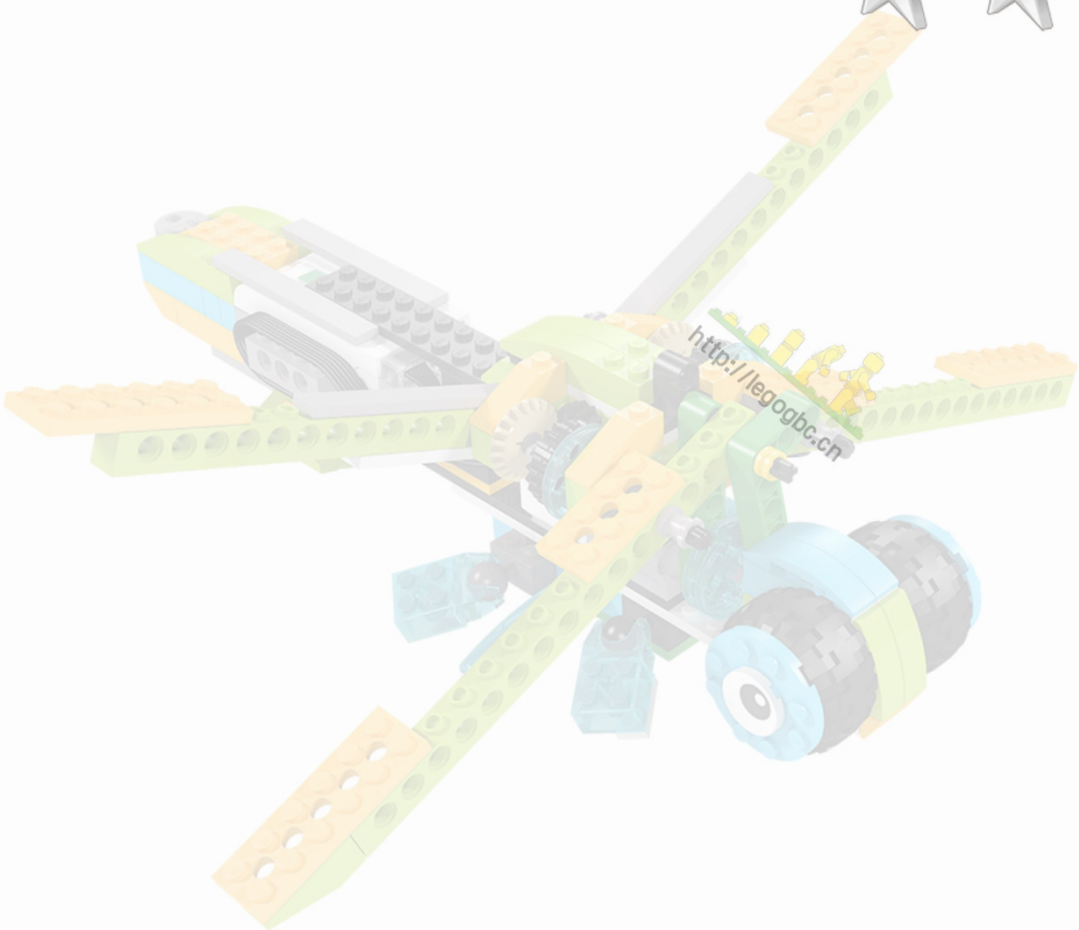

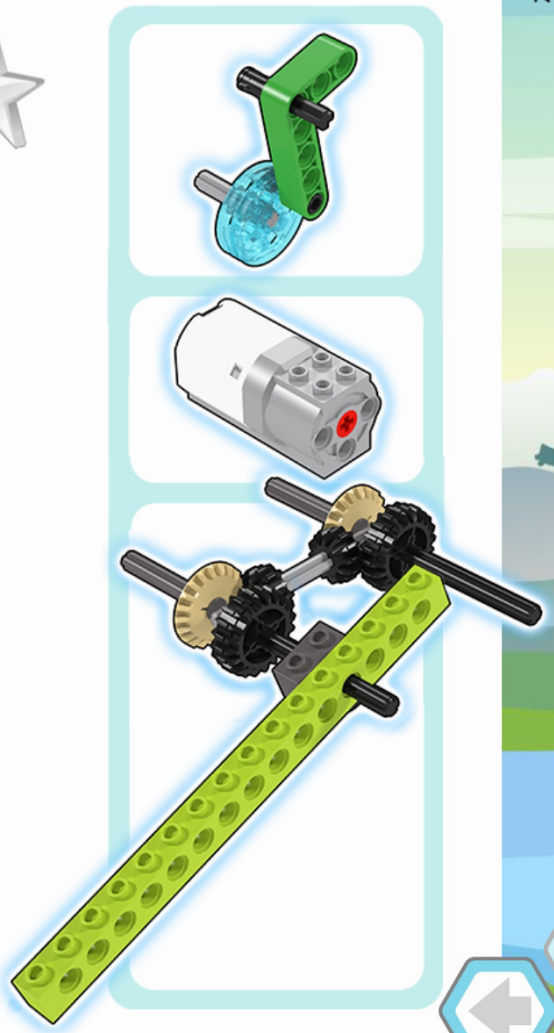

关注公众号获取更多

Task

Place parts of the robot on the right places

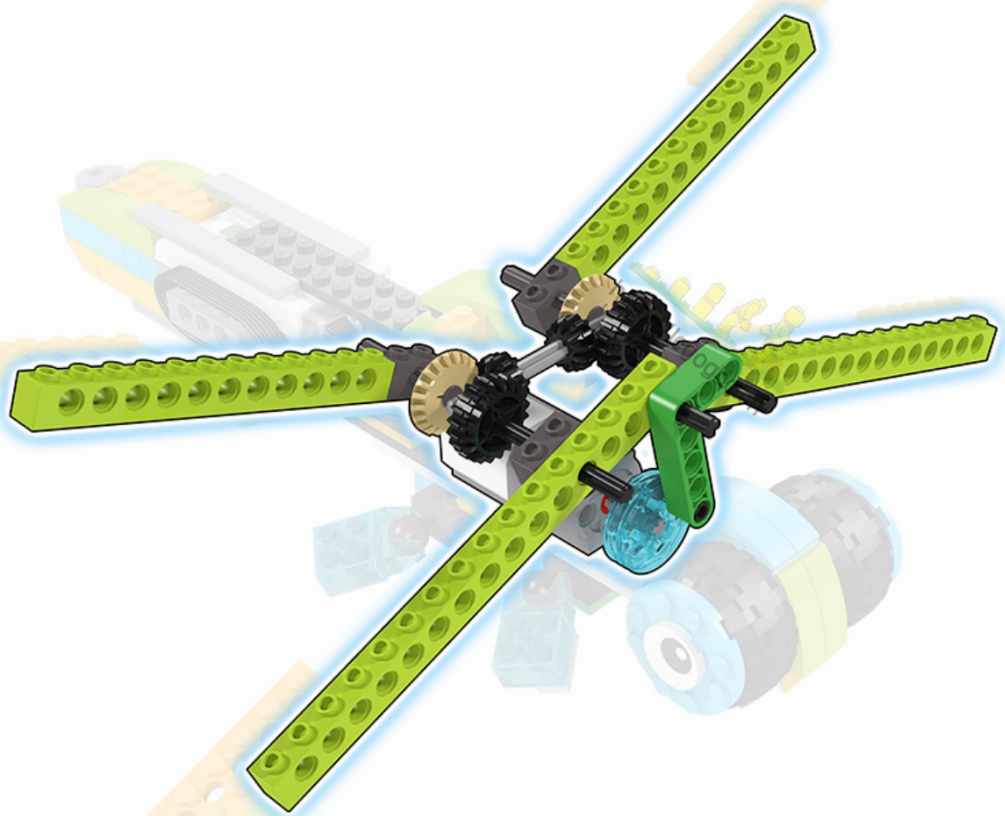

关注公众号获取更多

Task 1

Program the robot wings for 10 seconds at power 5. Check that the mechanism is working correctly.

Discussion of the task

关注公众号获取更多

How can sensors be used in the robot insect?
What robot`s functions can be programmed to make the behavior of the robot more natural?

Let`s remind. Motion sensor

关注公众号获取更多

Motion sensor determines the distance to objects in front.

The sensor emits infrared light (like a TV remote or conditioner) and measures the amount of light returned. If a lot of light has returned, then the object is nearby, and if it is small, then the object is far away.

http://legogbc.cn

Tilt sensor

关注公众号获取更多

The tilt sensor determines its position in space and can react to the shaking.

The tilt sensor can register one of the five states:

http://legogbc.cn

- horizontal position
- tilt forward
- tilt back
- tilt to the left
- tilt to the right

Additional sensors

关注公众号获取更多

Fix and connect the tilt sensor

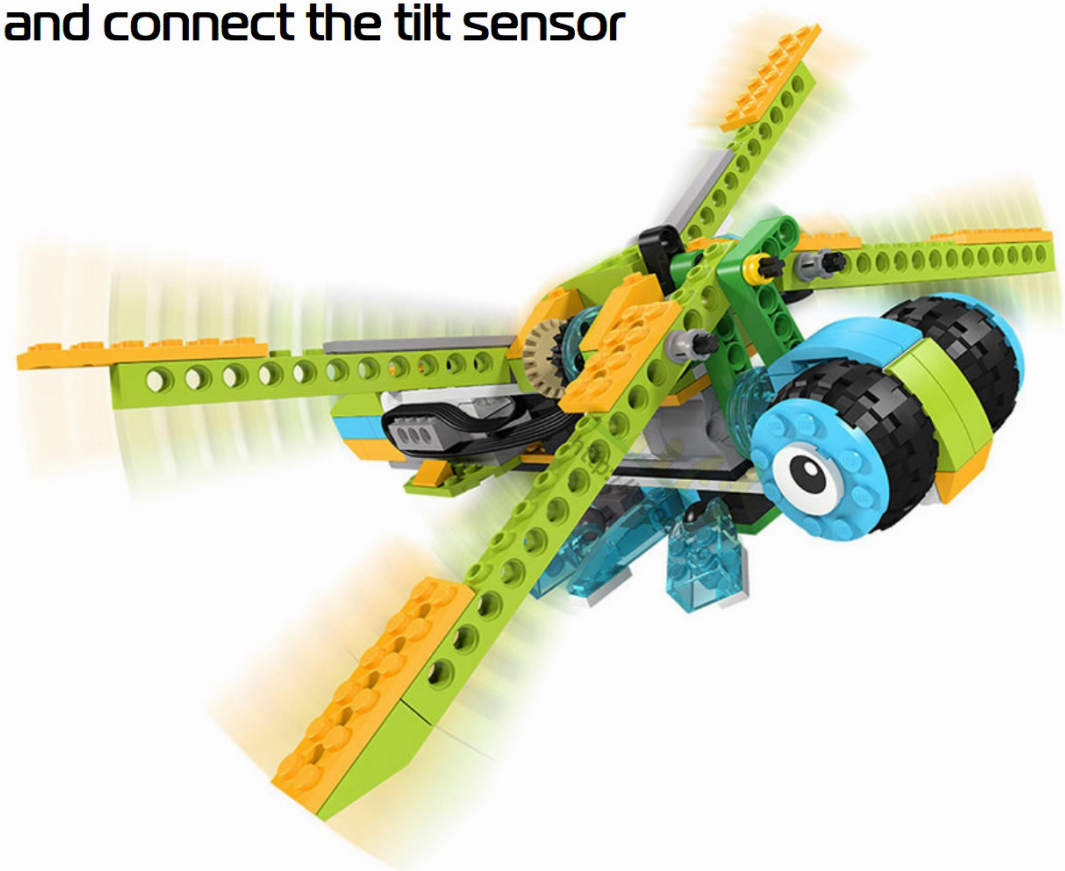

Meganeura

关注公众号获取更多

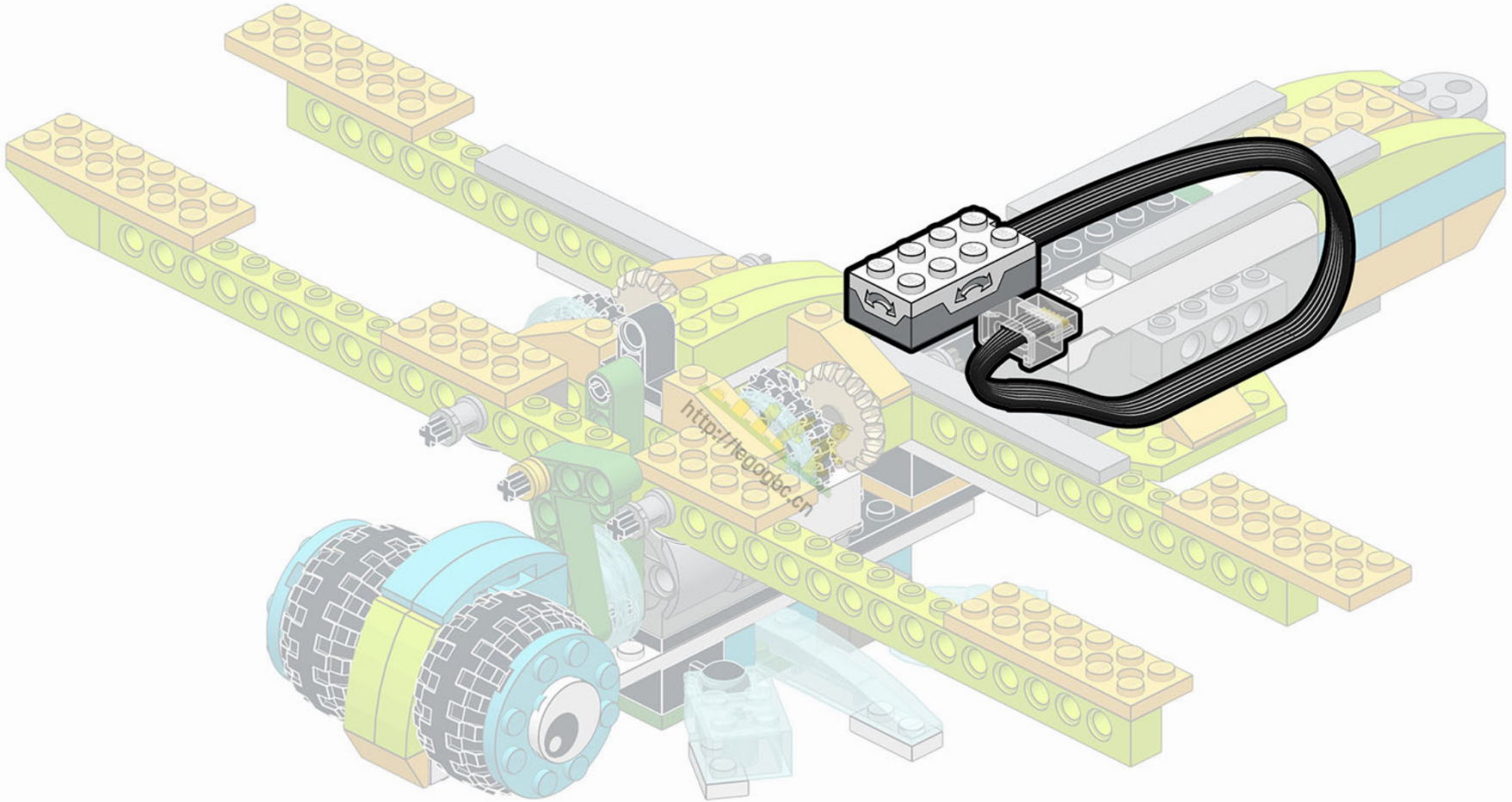

关注公众号获取更多

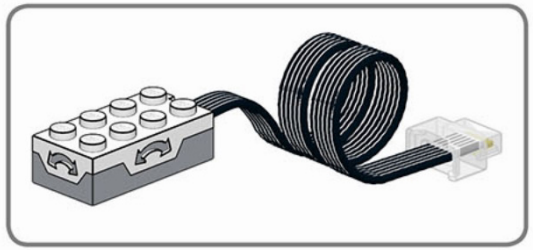

90

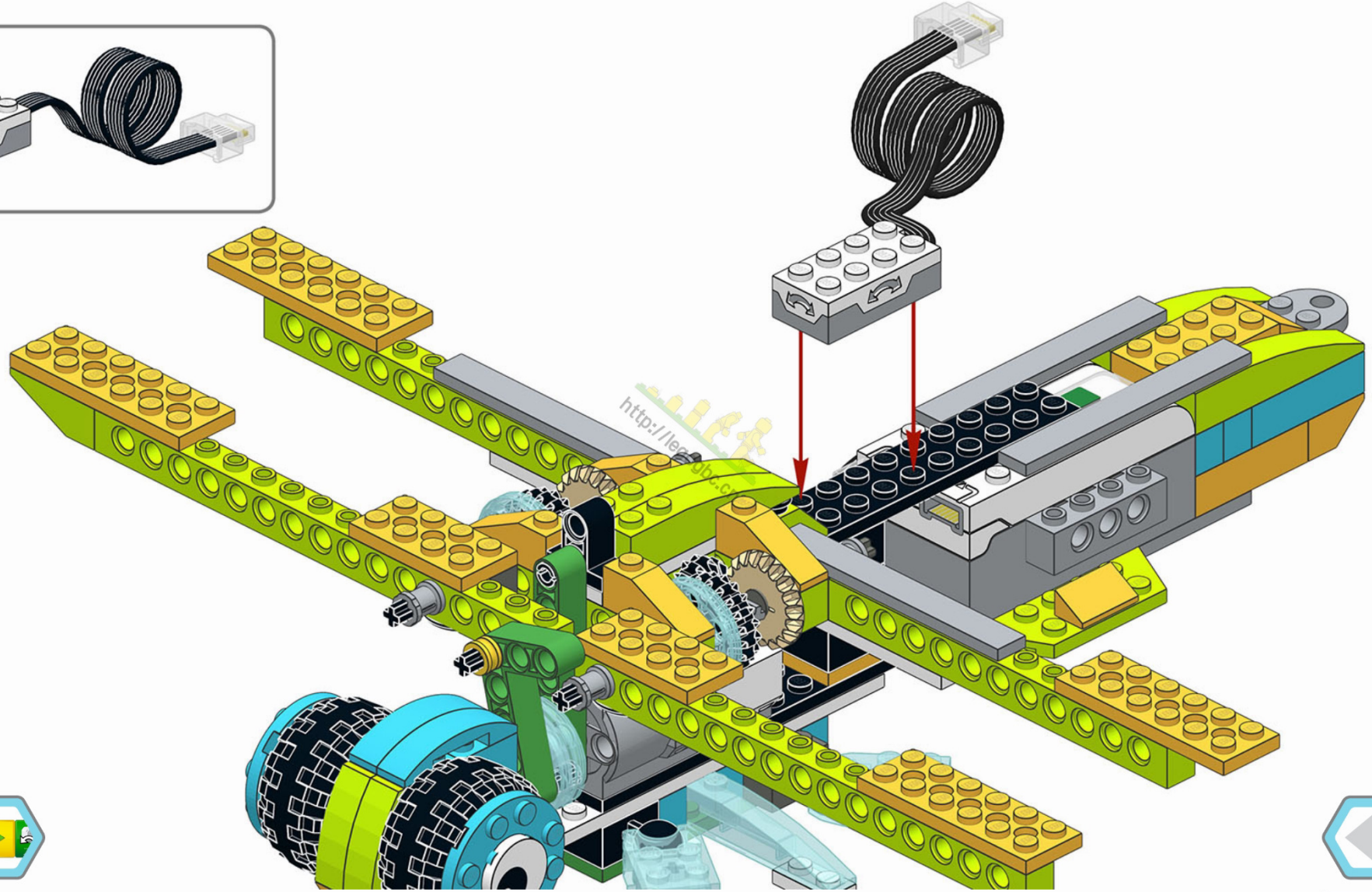

http://lego.gbc.cn

2/4

7

关注公众号获取更多

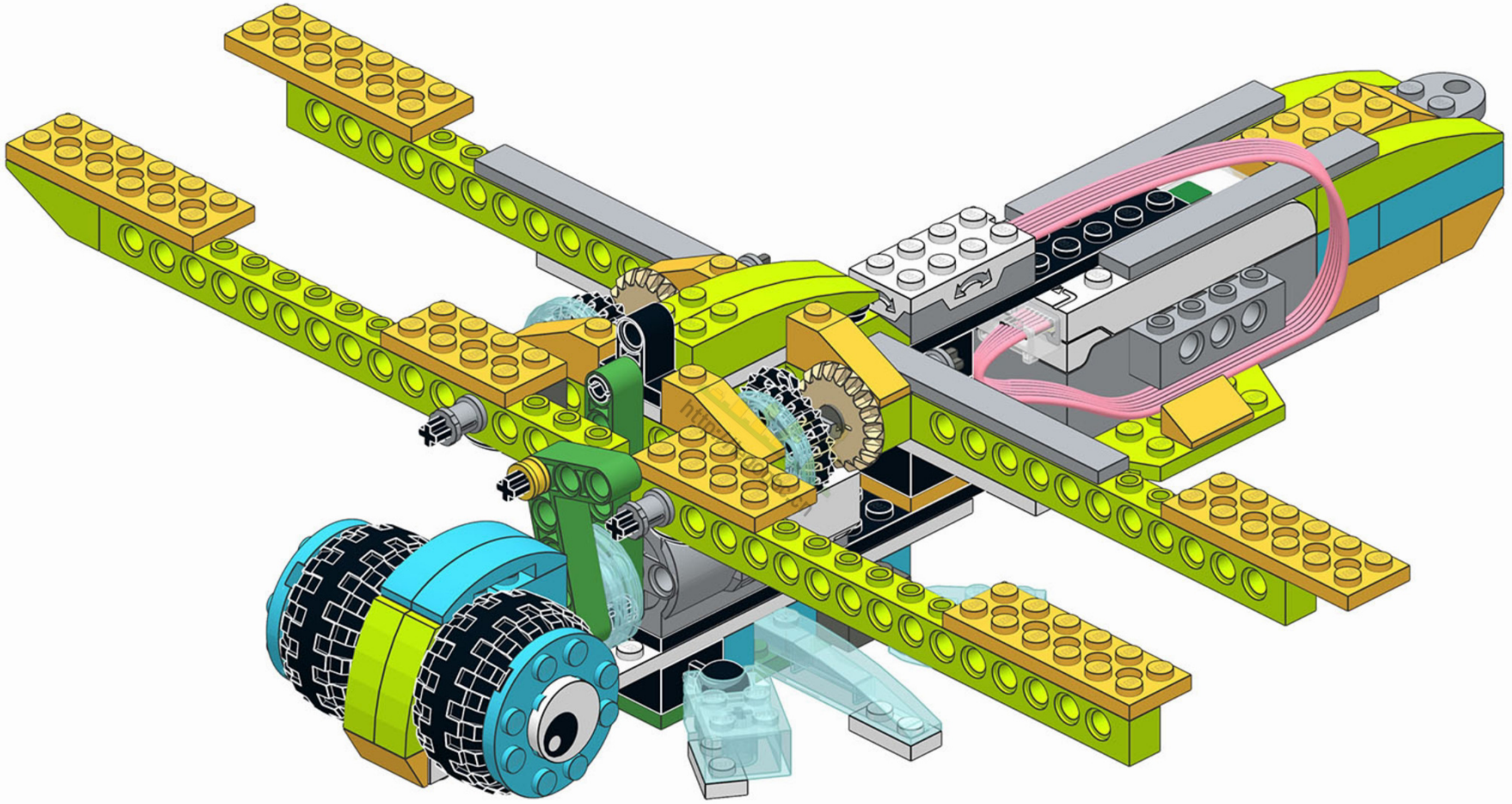

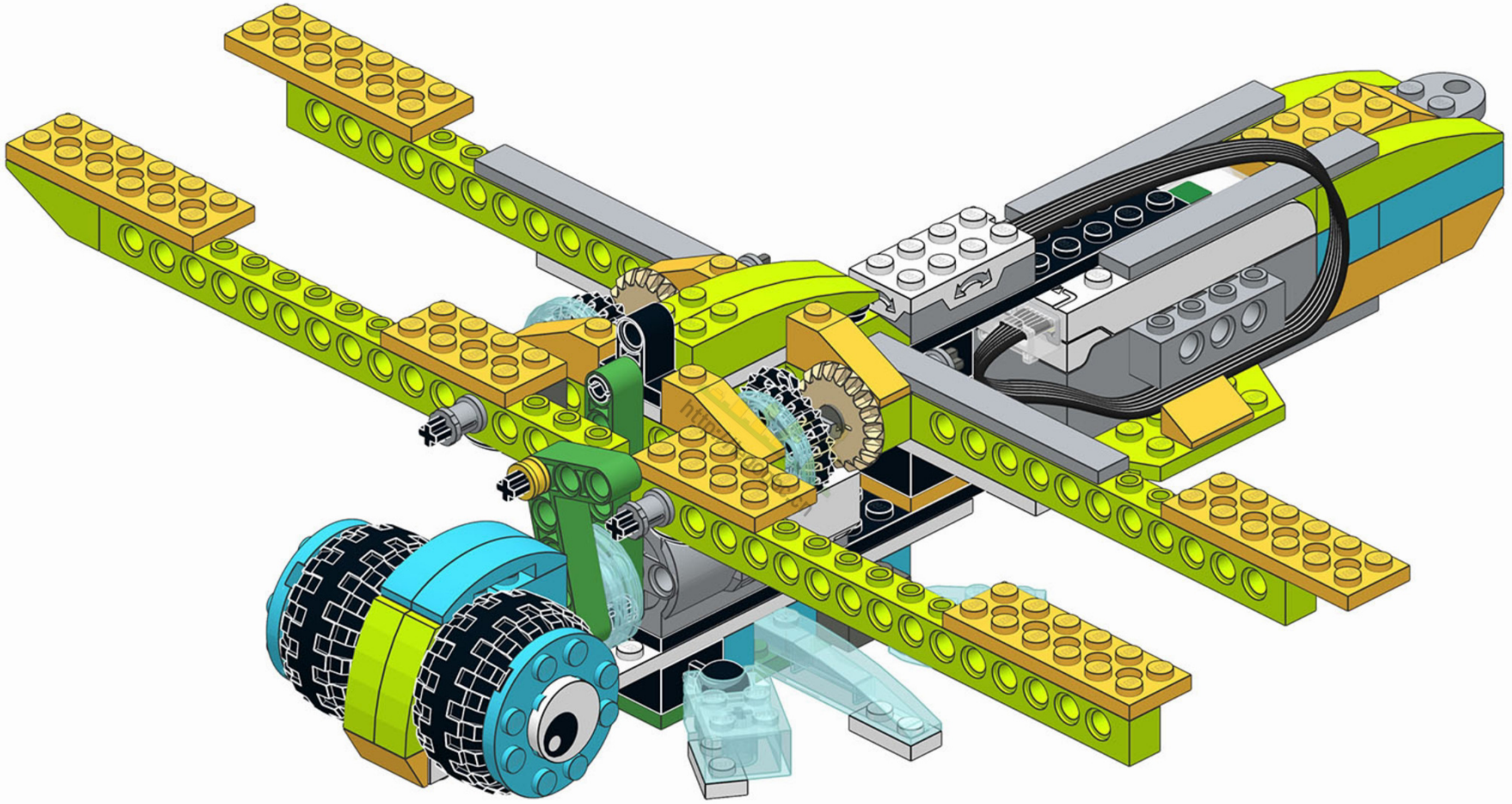

关注公众号获取更多

Task 2

关注公众号获取更多

Program the display of the tilt sensor on the screen. Take the robot in your hands and experiment. Write the numbers corresponding to each tilt:

Roboriseit! Content Viewer Teacher edition

Task 3

Meganeuras could fly in any direction due to the change in direction and force of the wings. We will also program the change in the speed of the wingspans, depending on the inclination of the robot:

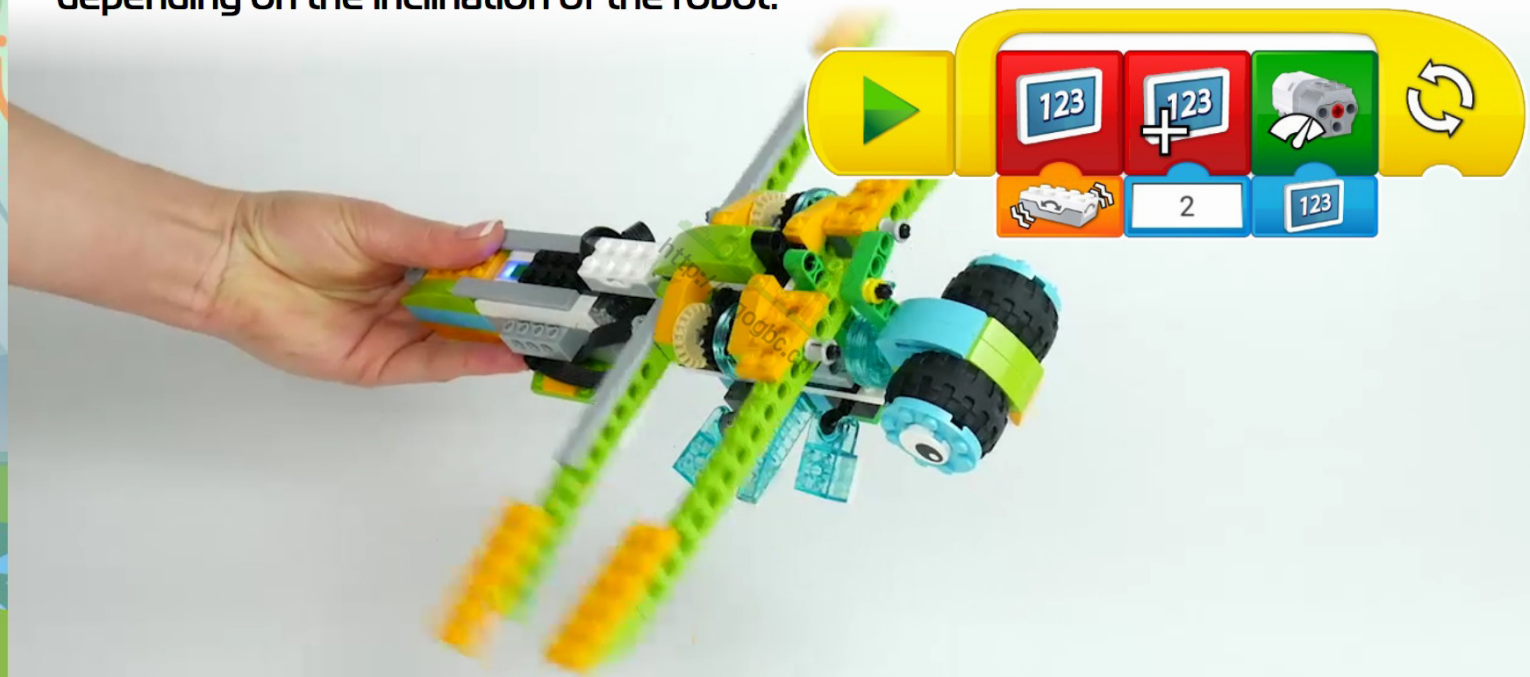

roboriseit.com

Roboriseit! Content Viewer Teacher edition

Task 3. Algorithm

You may have noticed that in the horizontal position the tilt sensor data is zero. If we use direct data transfer to the power of a motor, the wings will not move in a horizontal position. Therefore, an additional calculation is required. The program should work with the following algorithm:

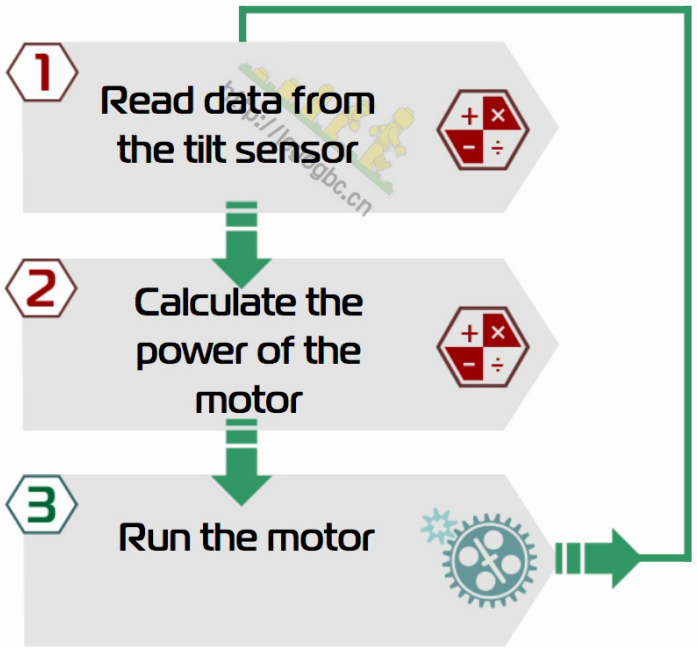

Roboriseit! Content Viewer Teacher edition
94%
3月5日 周一 16:19
关注公众号获取更多

Task 3. Program

1 Read data from the tilt sensor

Step: 1 2 3

Roboriseit! Content Viewer Teacher edition

Task 3. Program

1. Read data from the tilt sensor
2. Calculate the power of the motor

Step: 1 2 3

关注公众号获取更多

Roboriseit! Content Viewer Teacher edition
94% 3月5日 周一 16:19
关注公众号获取更多

Task 3. Program

1. Read data from the tilt sensor
2. Calculate the power of the motor
3. Run the motor

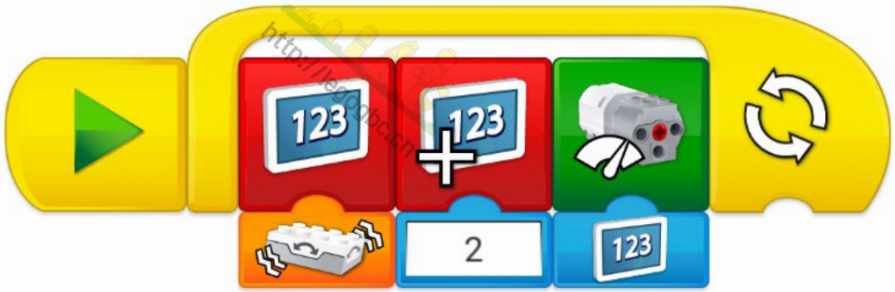

Step: 1 — 2 — 3

Roboriseit! Content Viewer Teacher edition

Task 3. Questions

What program block increases the value read from the sensor?

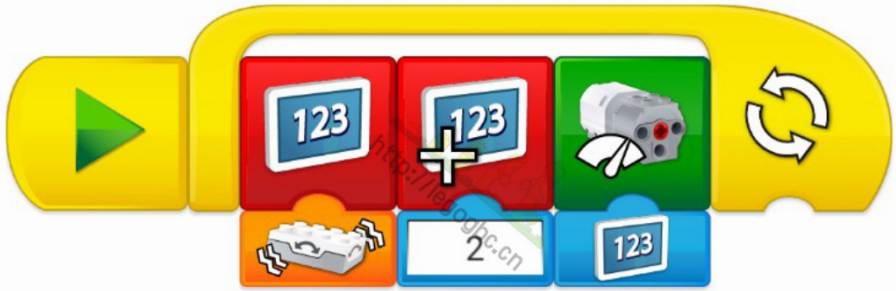

关注公众号获取更多

Roboriseit! Content Viewer Teacher edition

关注公众号获取更多

Additional sensors

Remove the tilt sensor, fix and connect the motion sensor

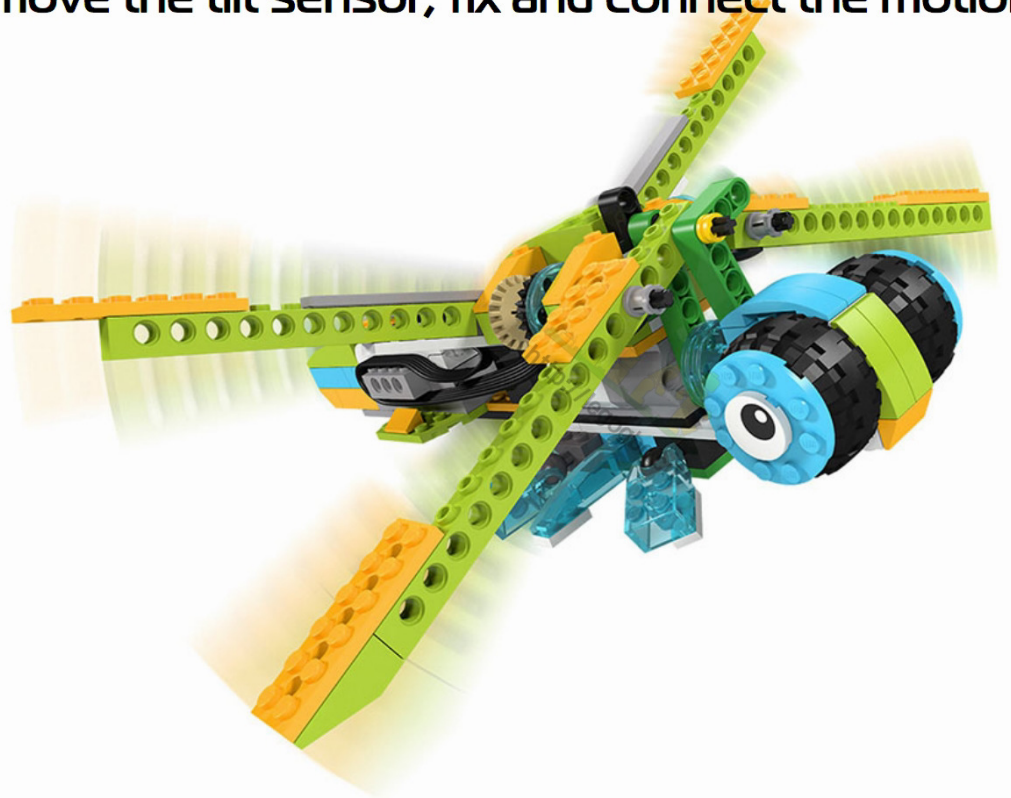

Meganeura

Roboriseit! Content Viewer Teacher edition
3月5日 周一 16:19
关注公众号获取更多

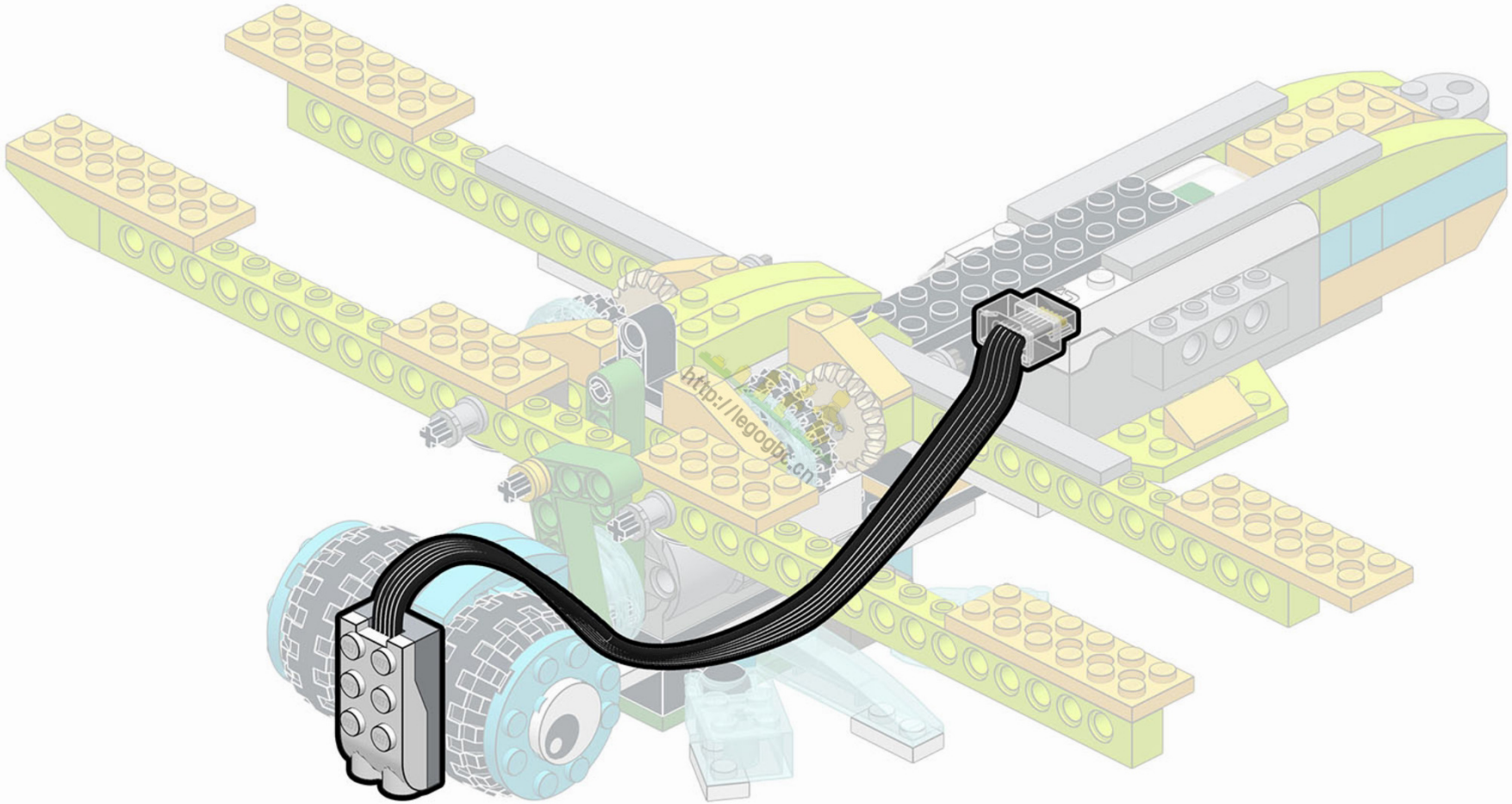

Roboriseit! Content Viewer Teacher edition
94%
3月5日 周一 16:19
关注公众号获取更多

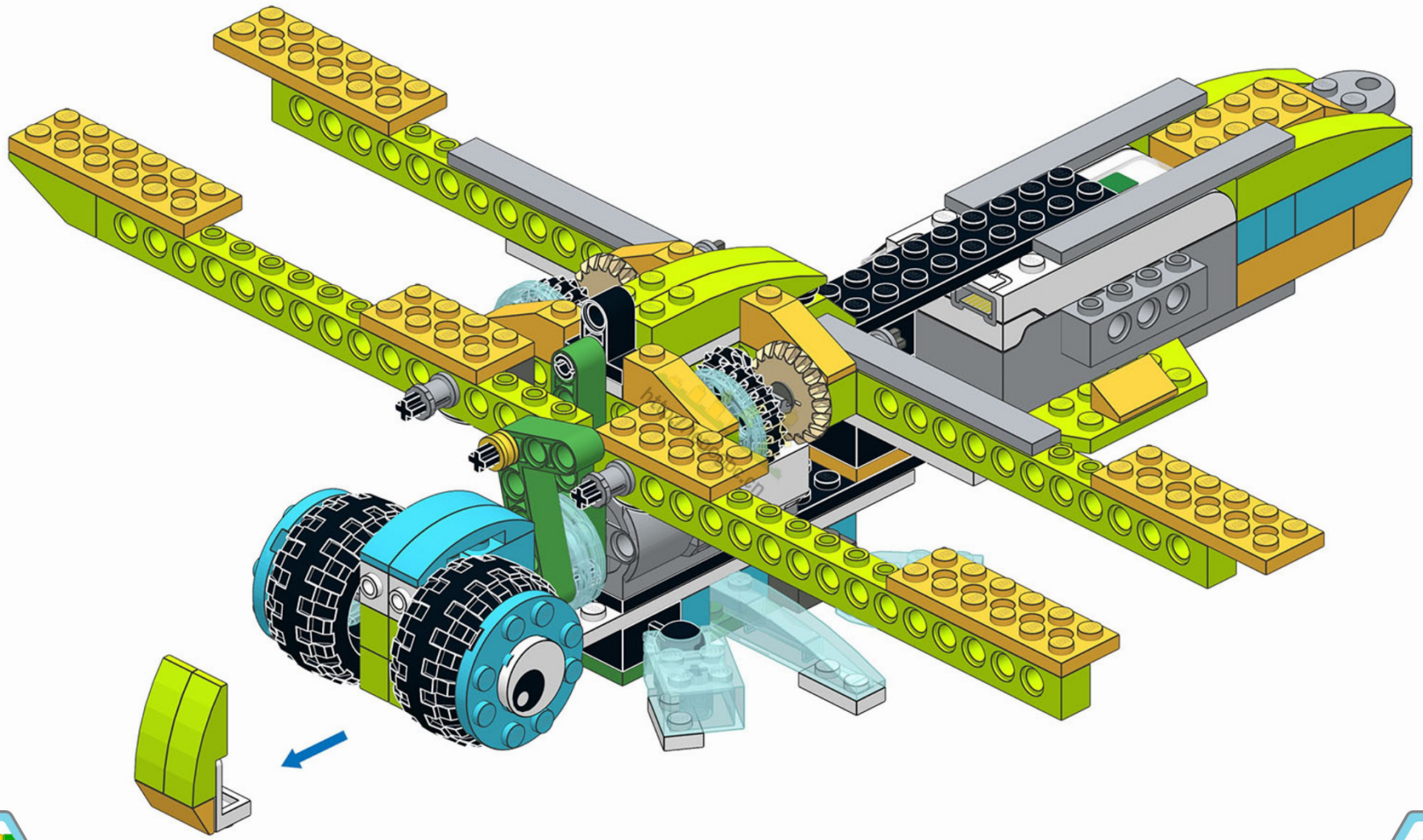

Roboriseit! Content Viewer Teacher edition

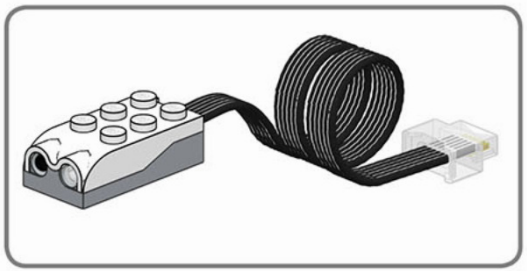

94

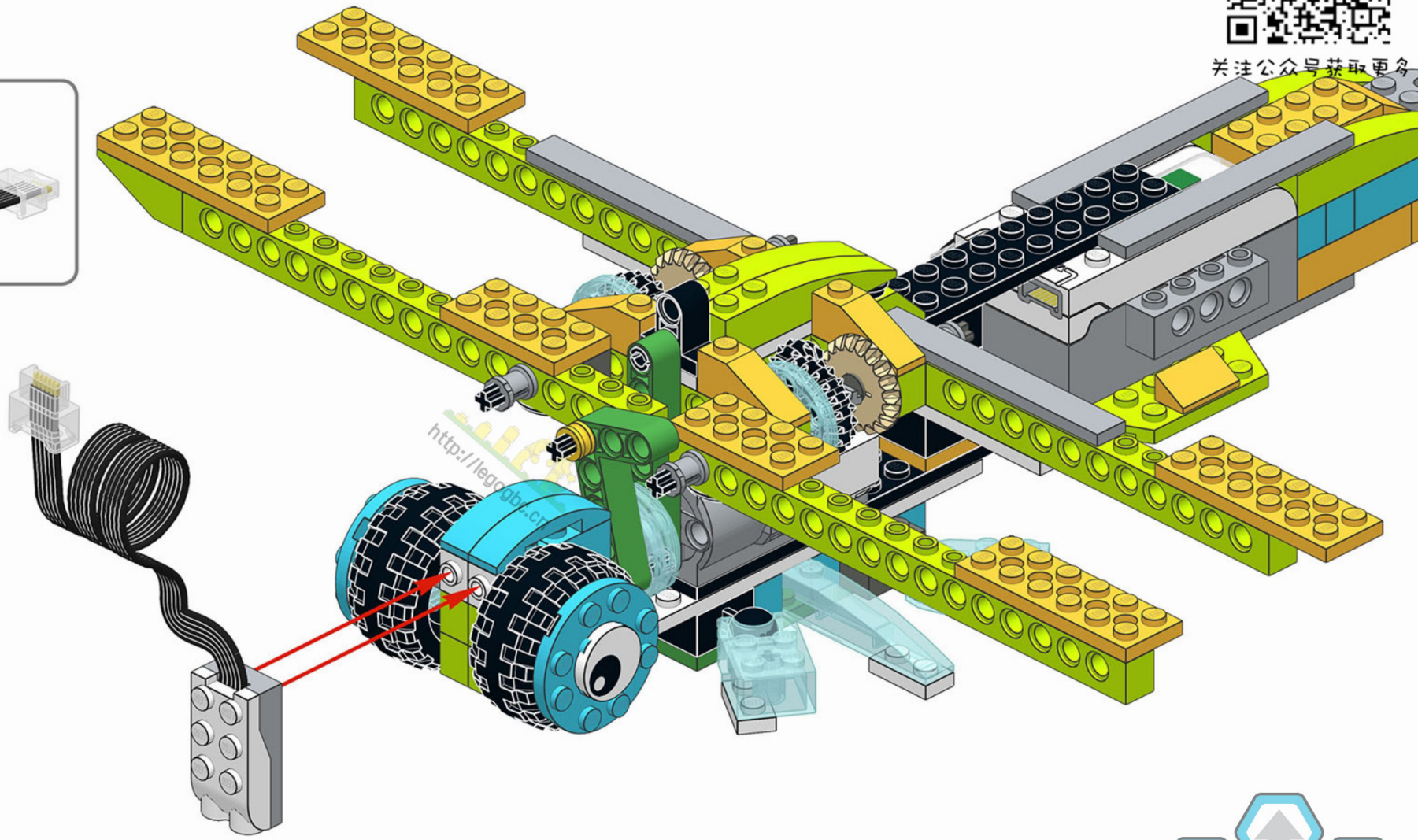

http://legogbr.cn

3/5

0

138

Roboriseit! Content Viewer Teacher edition
94%
3月5日 周一 16:19
关注公众号获取更多

95

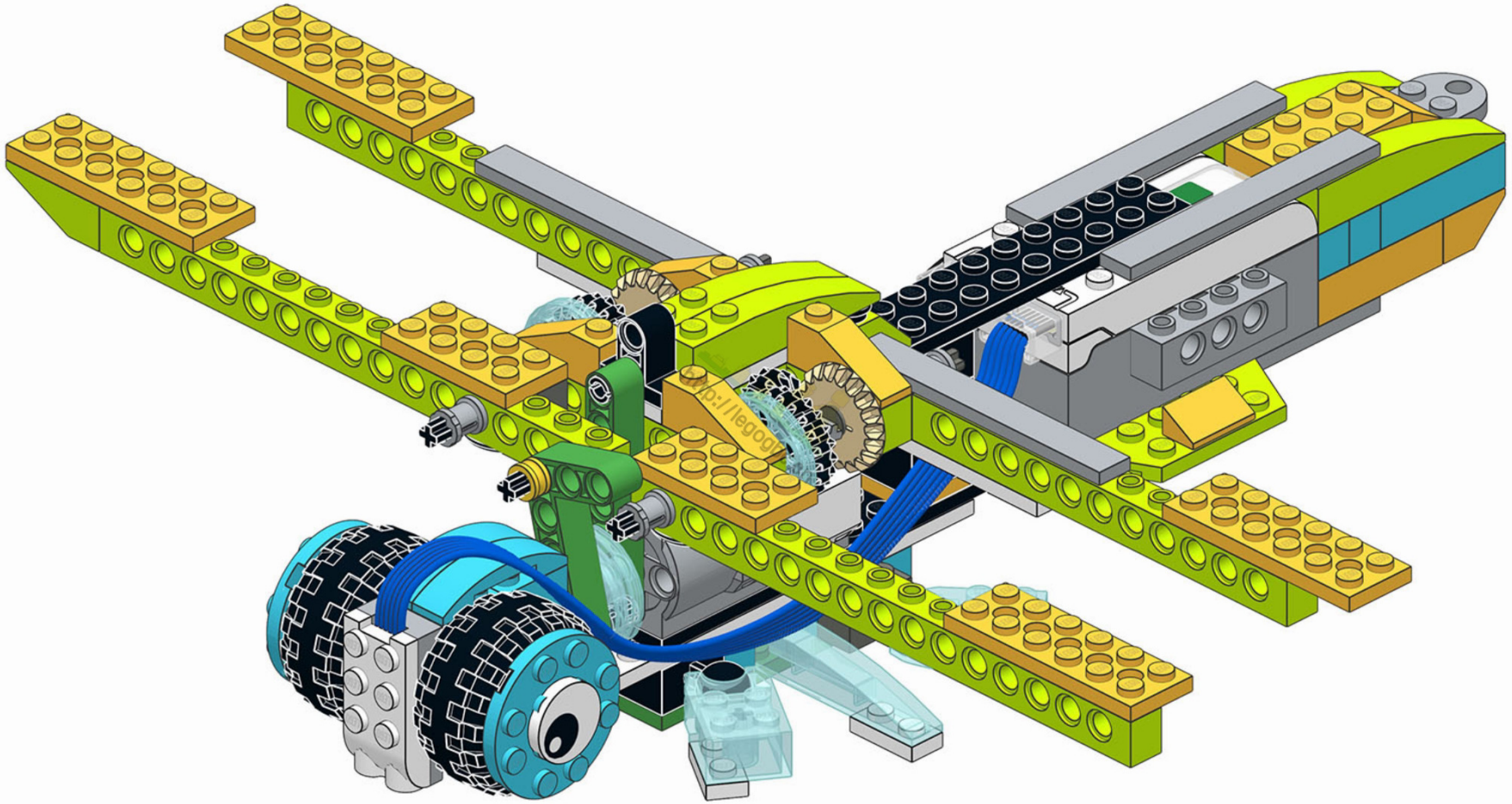

Roboriseit! Content Viewer Teacher edition

Task 4

Program the take off of the robot when approaching to it. This will simulate the behavior of the living insect.

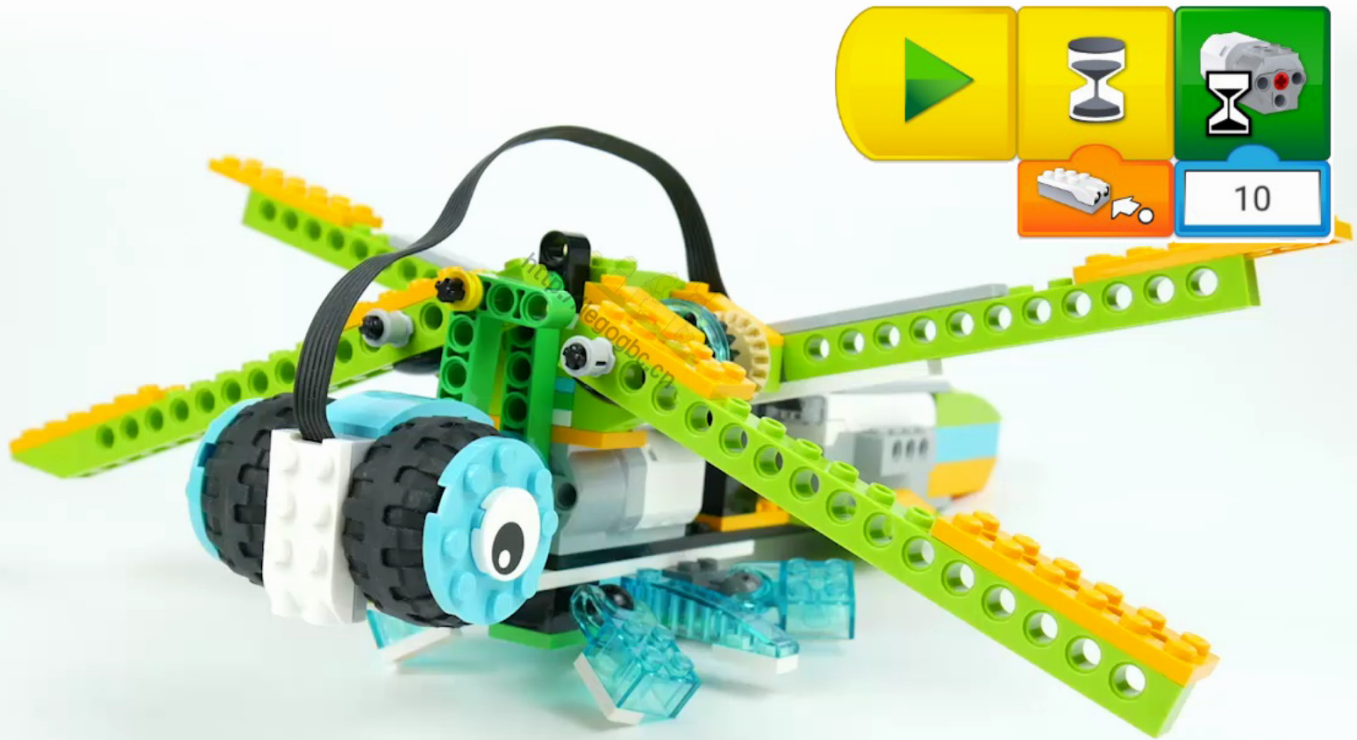

Roboriseit! Content Viewer Teacher edition

关注公众号获取更多

Task 4. Algorithm

The program is run by the following algorithm:

http://legogbc.cn

Roboriseit! Content Viewer Teacher edition

Task 4. Program

关注公众号获取更多

1 Wait the object approach

Step: 1 2

Roboriseit! Content Viewer Teacher edition

Task 4. Program

1 Wait the object approach

2 Run the motor for 10 seconds

Step: 1 — 2

关注公众号获取更多

Roboriseit! Content Viewer Teacher edition

Task 5 *

Sound to the robot flight. Add to the program Sound block.

roboriseit.com

Roboriseit! Content Viewer Teacher edition

Task 6 *

Program the smooth take-off of the robot. The speed of the wingspans should vary from minimum to maximum.

关注公众号获取更多

Roboriseit! Content Viewer Teacher edition

Question

Who was the most dangerous predators in the air at the time of the Paleozoic?

Birds

Insects

Flying reptiles

0

146

Roboriseit! Content Viewer Teacher edition

Discuss!

- In what era did the first insects appear, how long was it?
- What modern insect is similar to Meganeura, although it is not its ancestor?
- What did Meganeuras eat?
- Why can not there be so huge insects now?

Meganeura