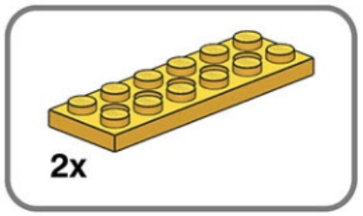

1

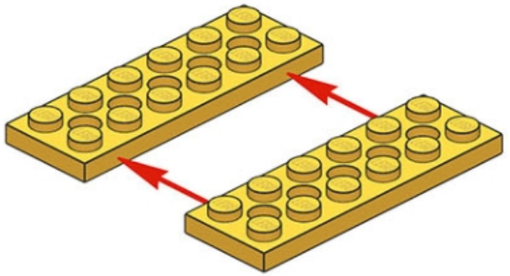

nenka@gmail.com

ROBORISE-IT!
ROBOTIC EDUCATION

2x

2

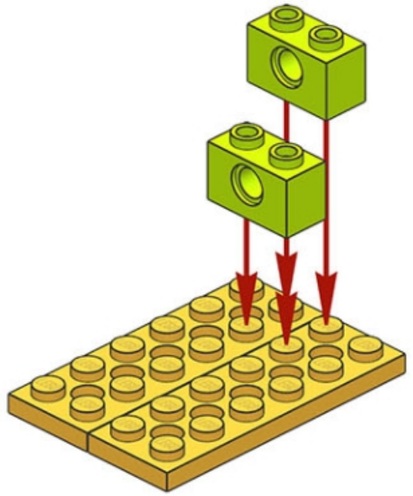

herrka@gmail.com

2/36

0

23

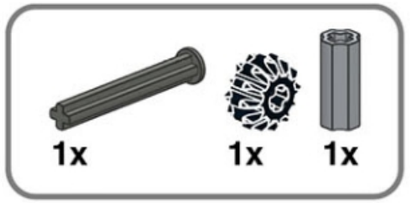

3

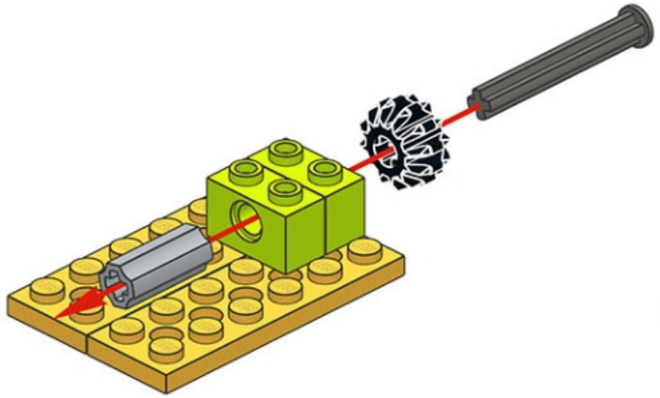

ROBORISE-IT!
ROBOTIC EDUCATION

nenke@gmail.com

ROBORISE-IT!
ROBOTIC EDUCATION

4

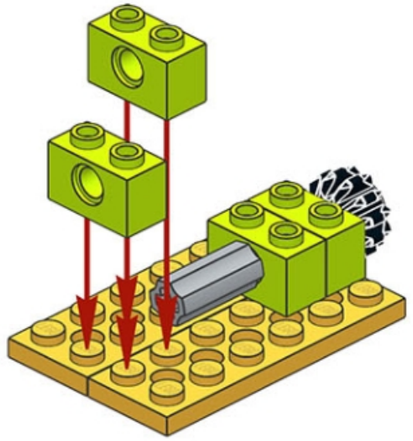

nerrka@gmail.com

narrka@gmail.com

ROBORISE-IT!
ROBOTIC EDUCATION

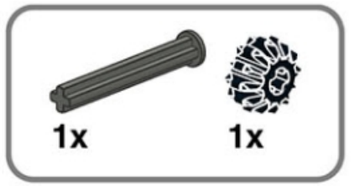

5

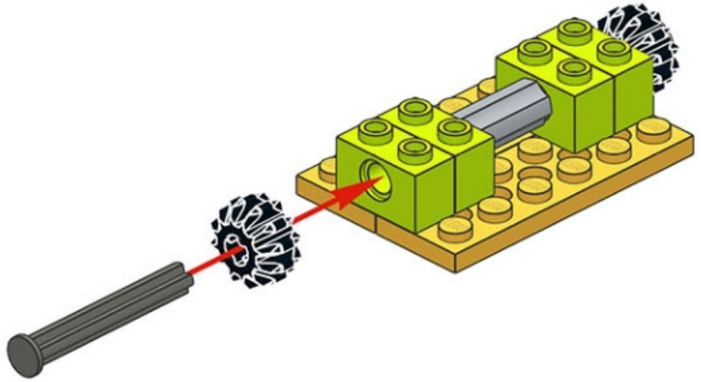

ROBORISE-IT!
ROBOTIC EDUCATION

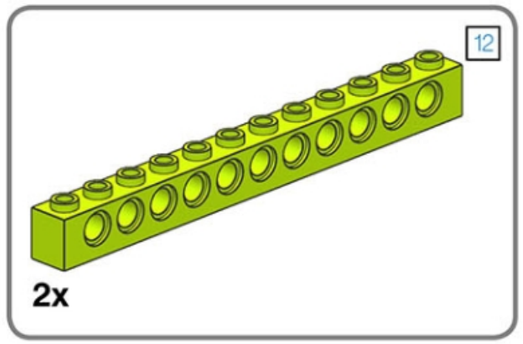

6

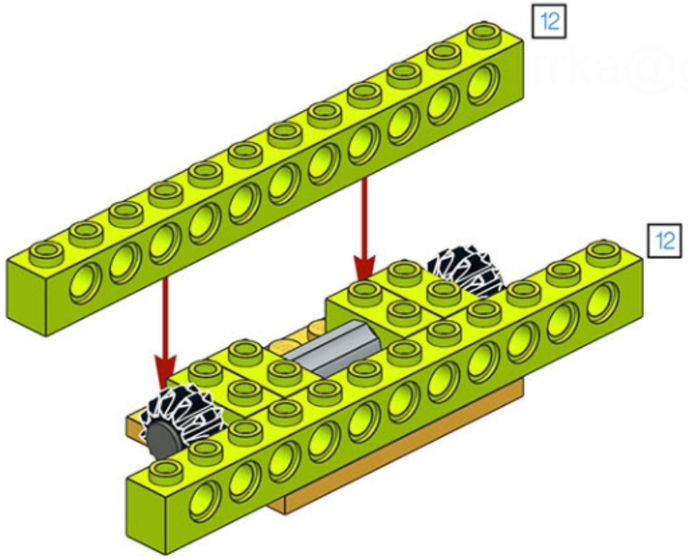

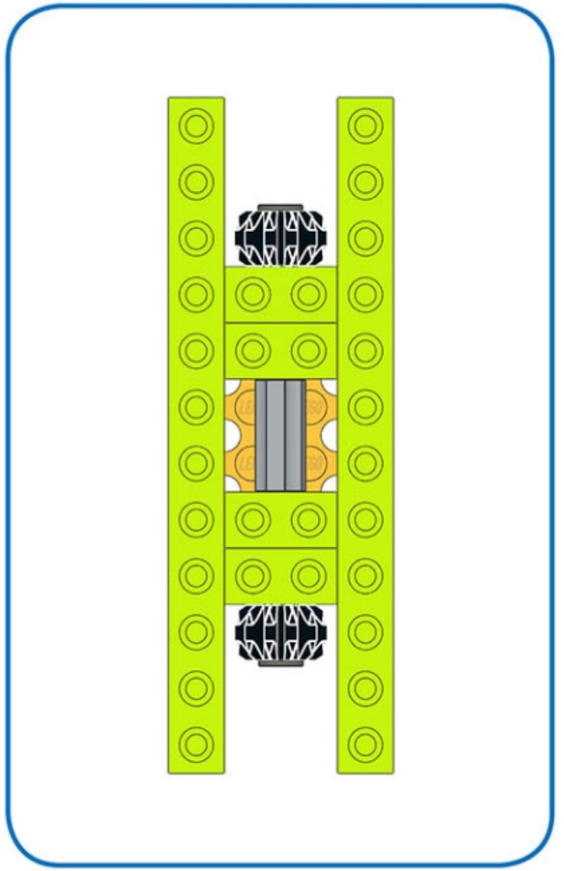

6/36

0

27

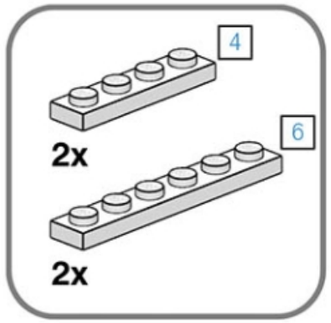

7

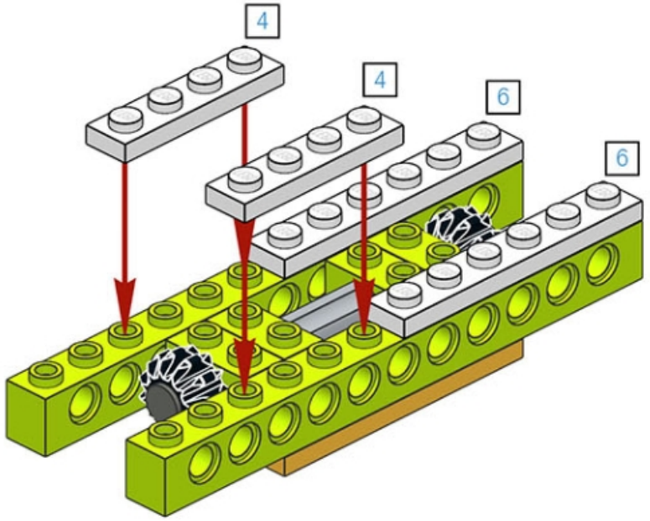

ROBORISE-IT!
ROBOTIC EDUCATION

nerrka@gmail.com

ROBORISE-IT!
ROBOTIC EDUCATION

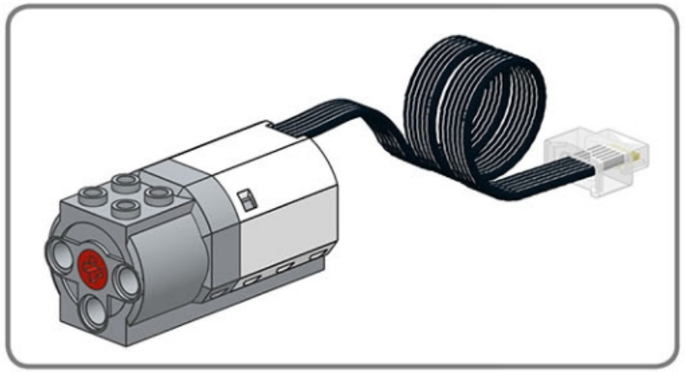

8

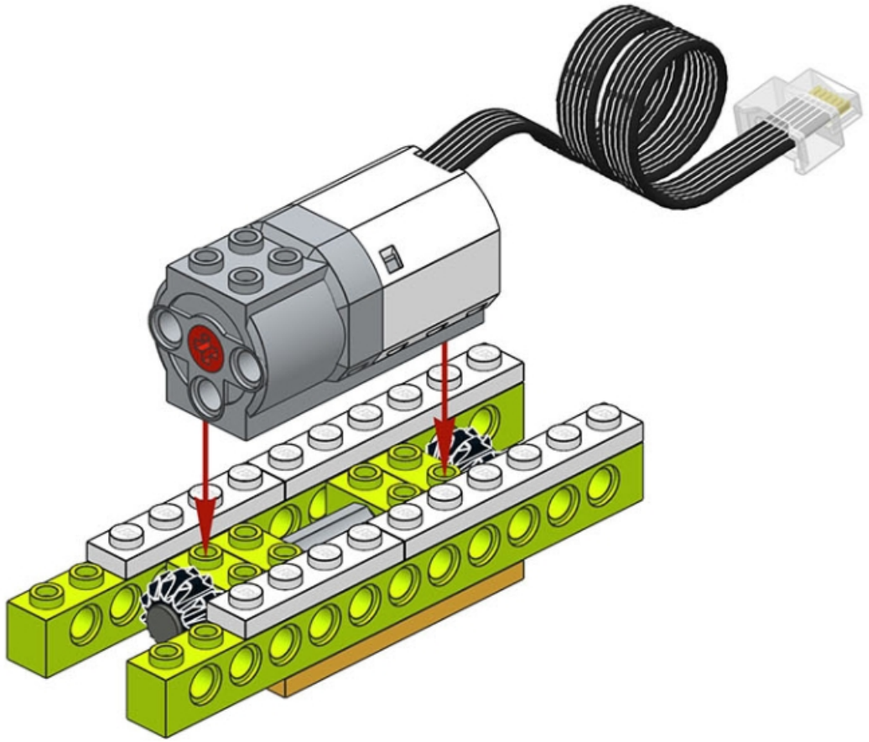

ROBORISE-IT!
ROBOTIC EDUCATION

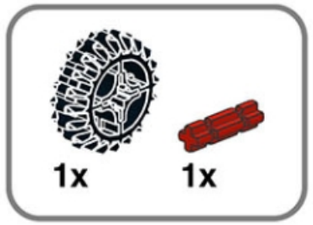

9

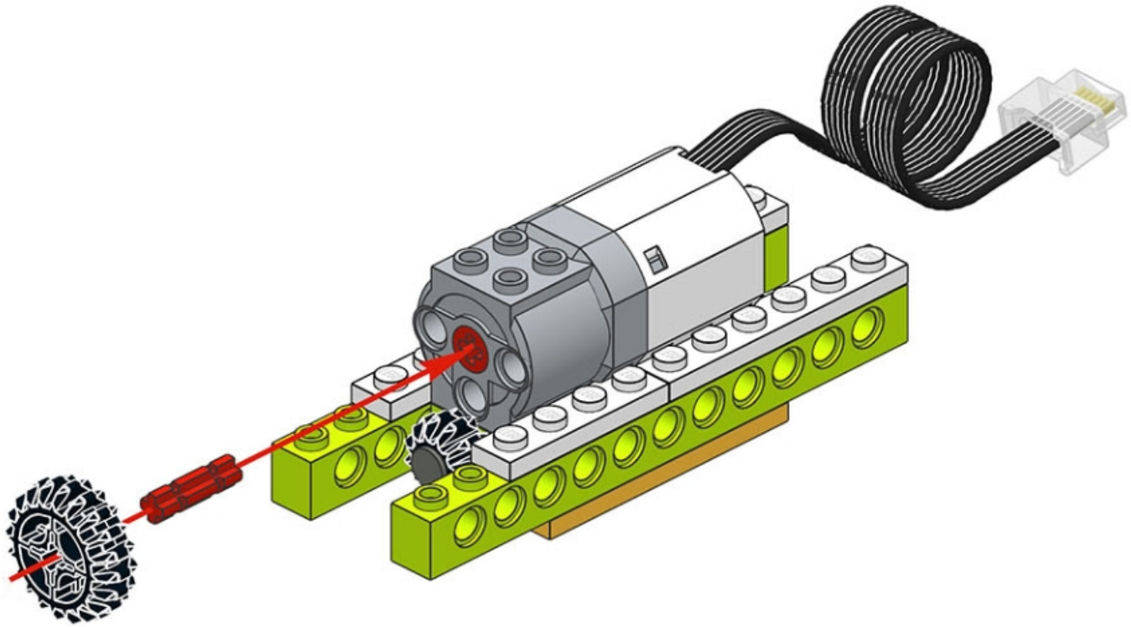

nerrka@gmail.com

ROBORISE-IT!
ROBOTIC EDUCATION

10

nerrka@gmail.com

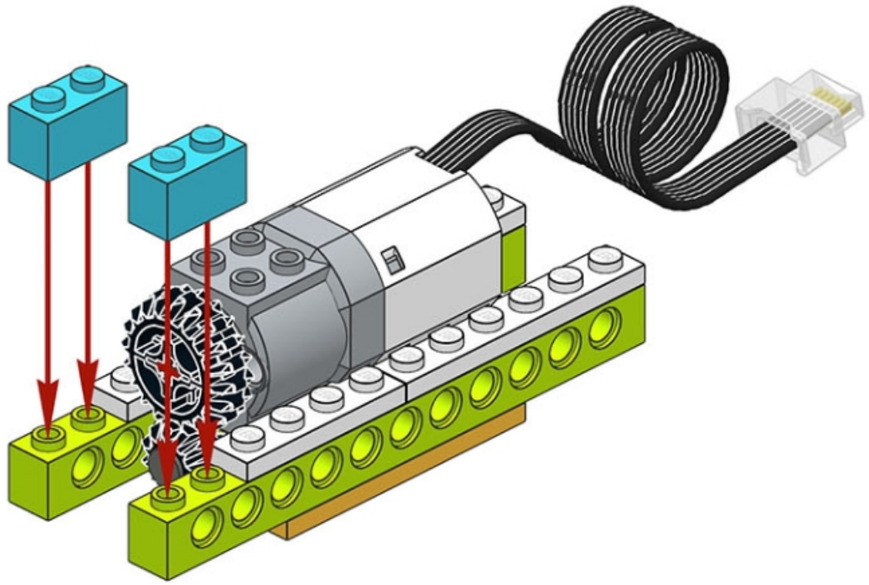

ROBORISE-IT!
ROBOTIC EDUCATION

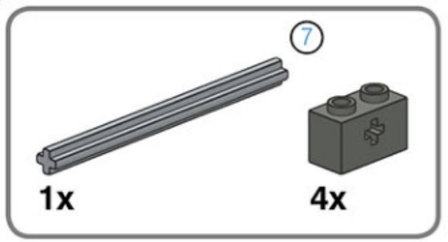

1

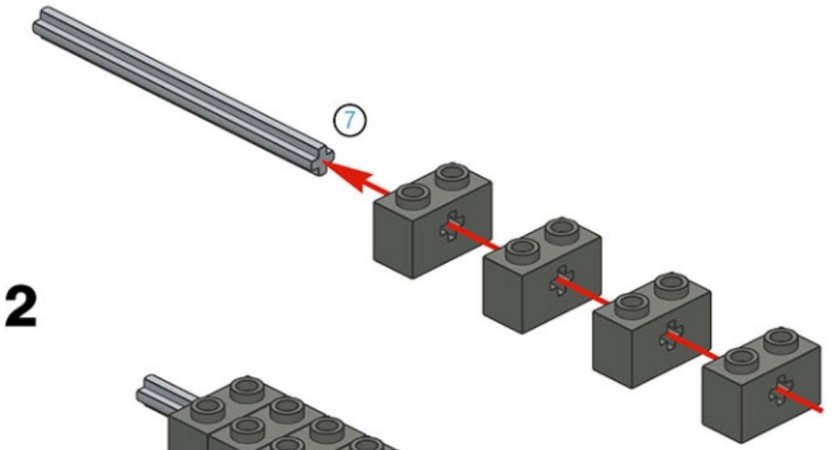

2

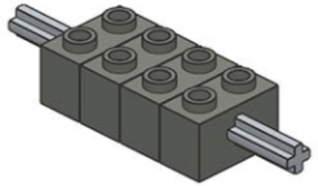

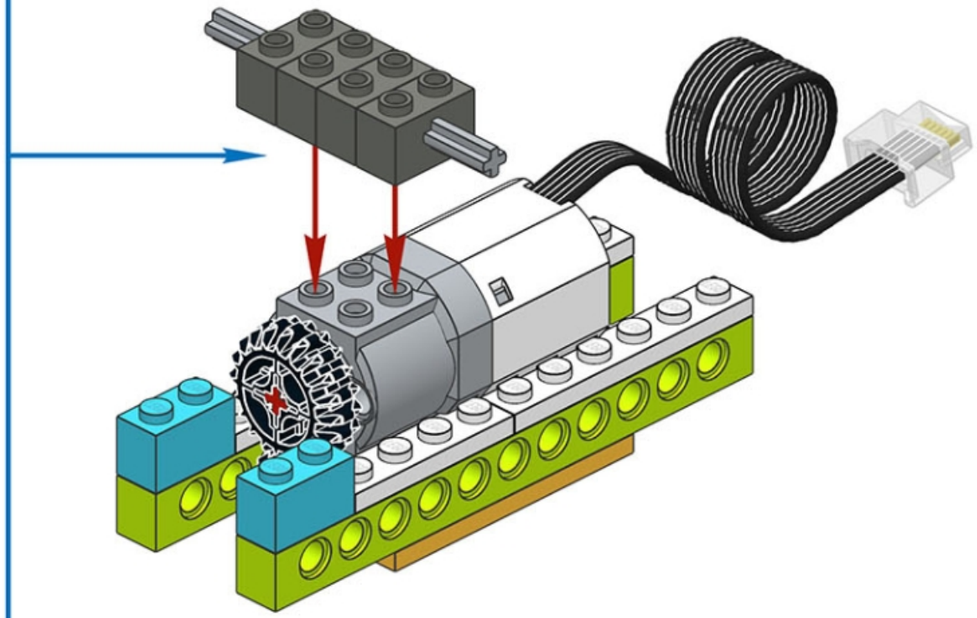

11/36

0

32

ROBORISE-IT!
ROBOTIC EDUCATION

4x

12

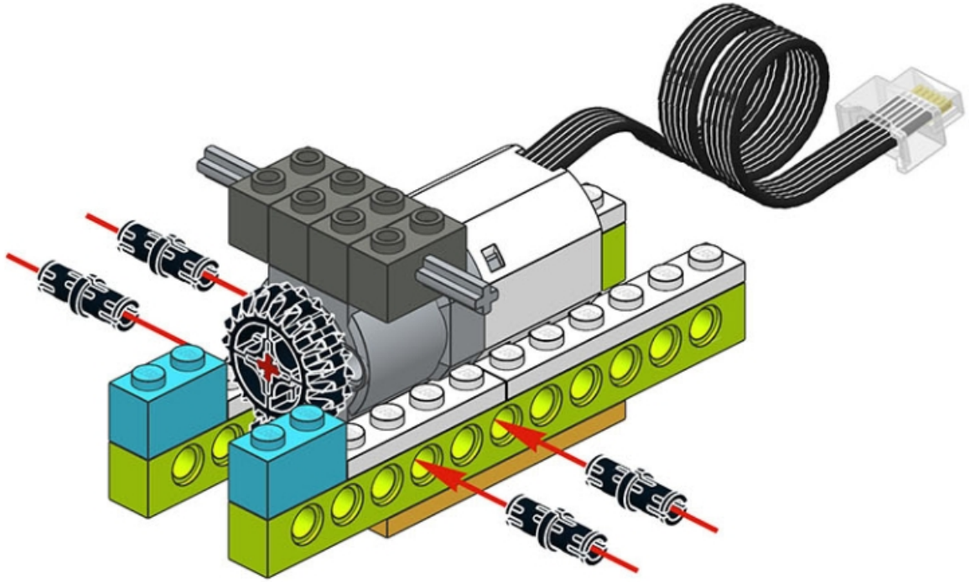

marika@gmail.com

12/36

0

33

ROBORISE-IT!
ROBOTIC EDUCATION

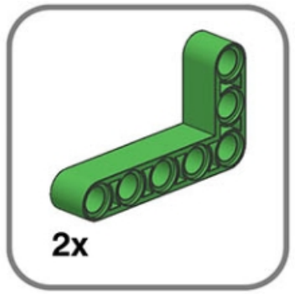

13

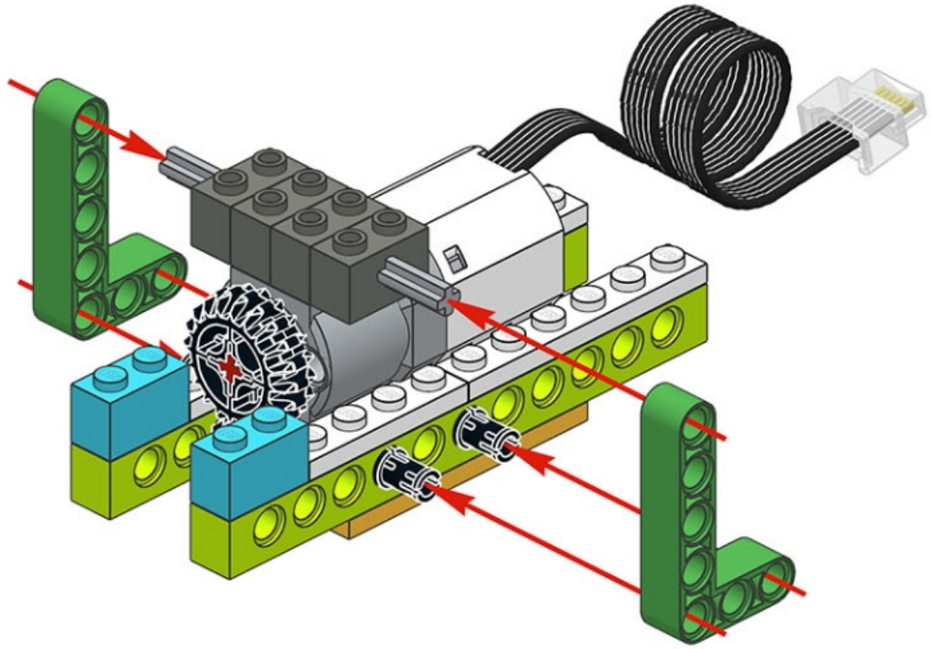

ROBORISE-IT!
ROBOTIC EDUCATION

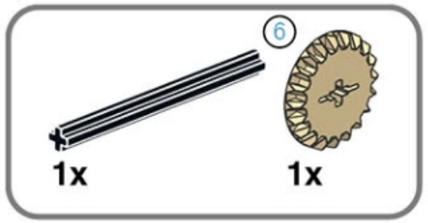

14

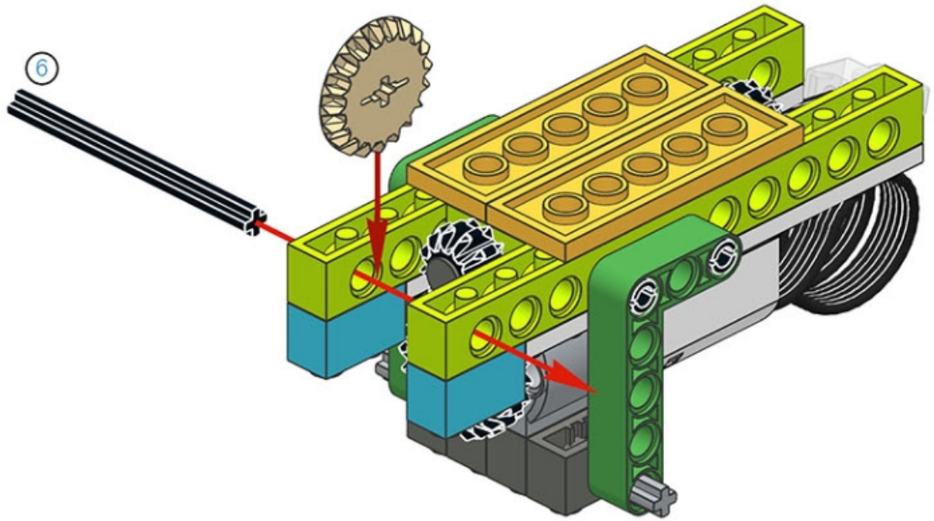

nerka@gmail.com

15

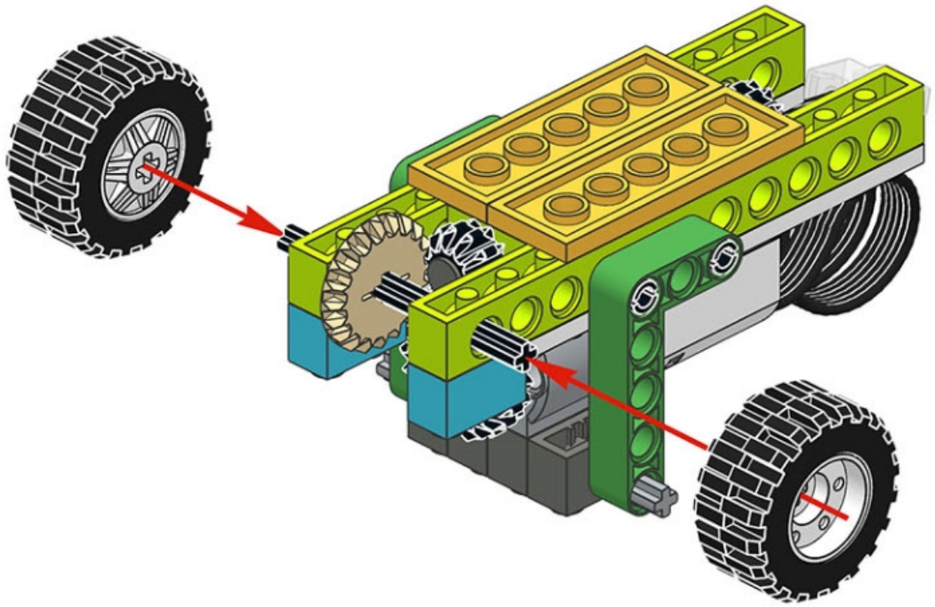

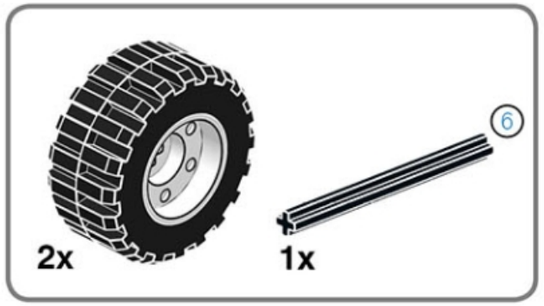

16

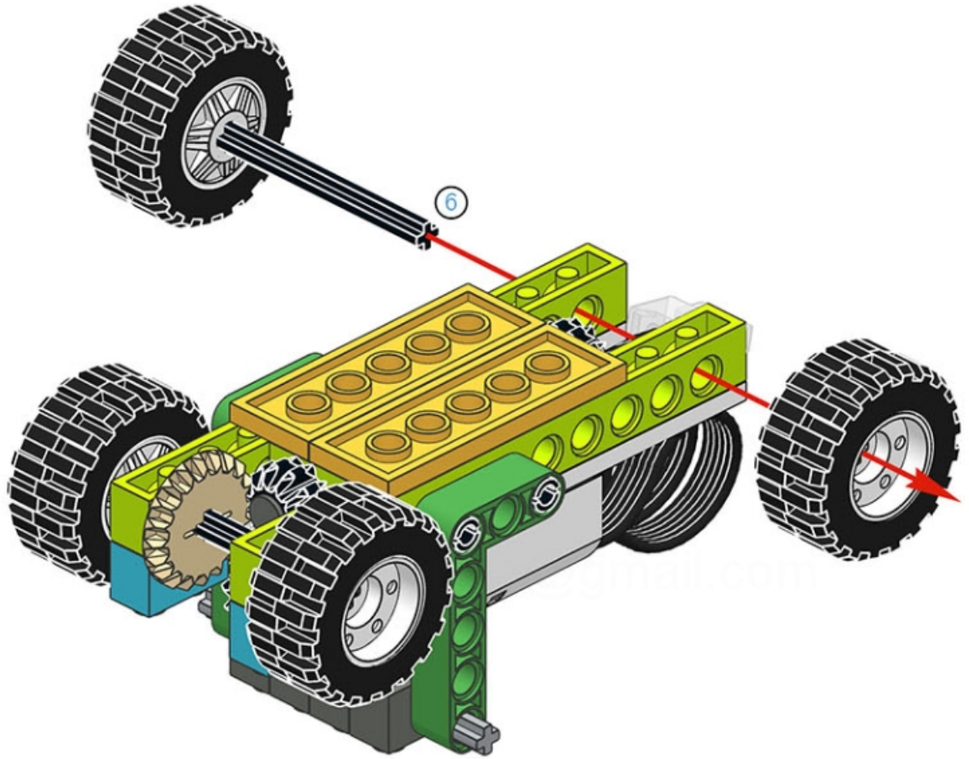

ROBORISE-IT!
ROBOTIC EDUCATION

17

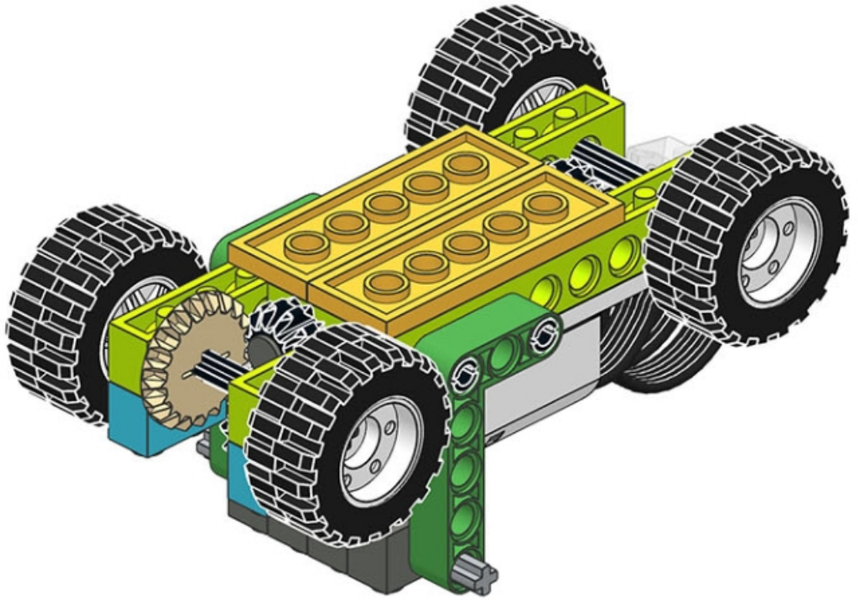

berka@gmail.com

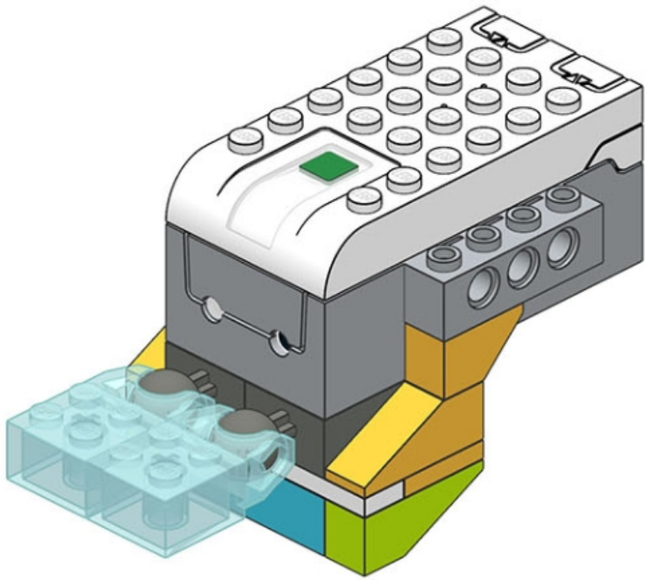

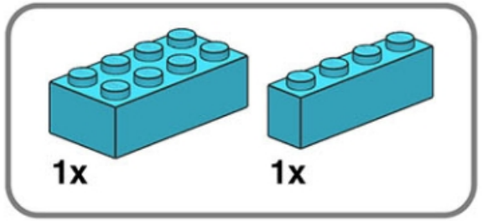

18

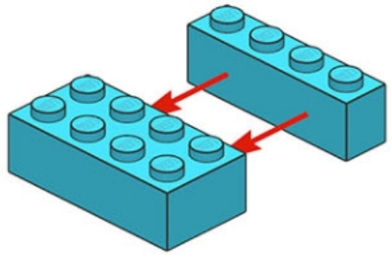

nerrka@gmail.com

ROBORISE-IT!
ROBOTIC EDUCATION

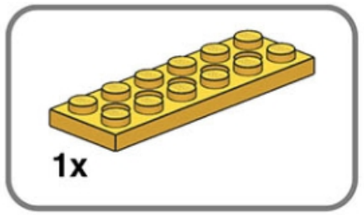

19

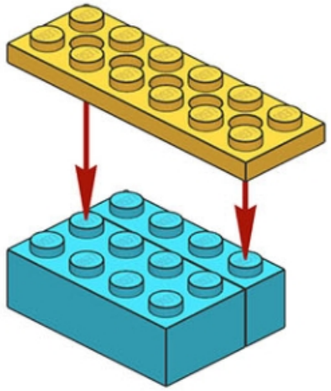

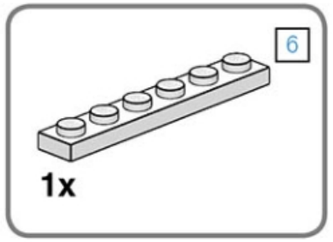

20

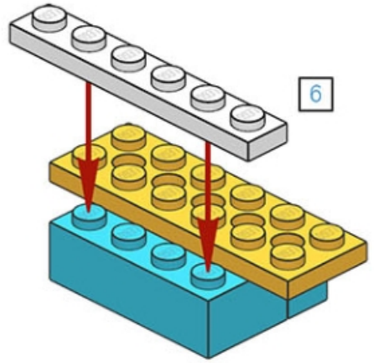

nenka@gmail.com

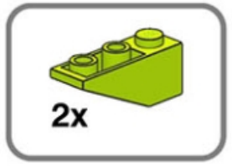

21

nenka@gmail.com

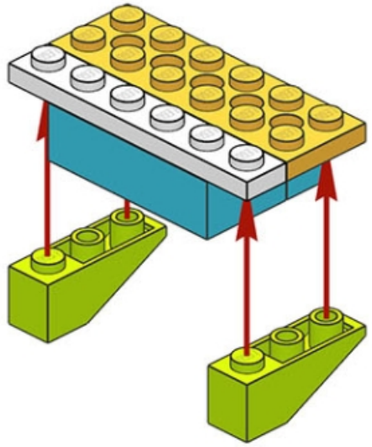

nenka@gmail.com

ROBORISE-IT!
ROBOTIC EDUCATION

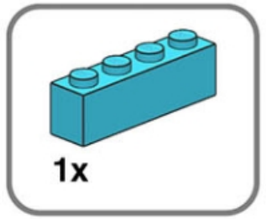

22

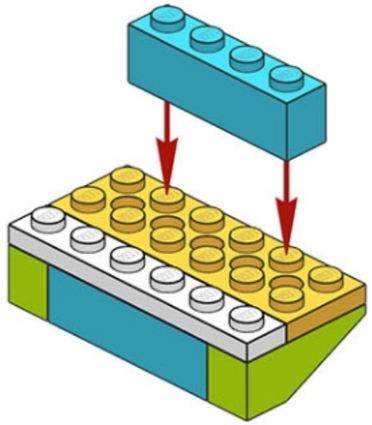

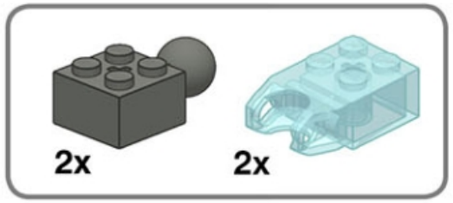

23

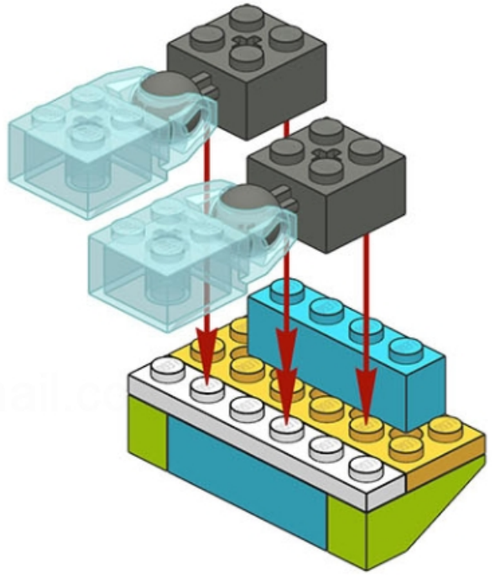

ROBORISE-IT!
ROBOTIC EDUCATION

ROBORISE-IT!
ROBOTIC EDUCATION

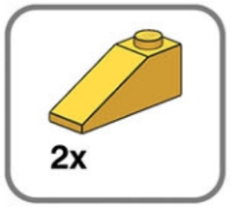

24

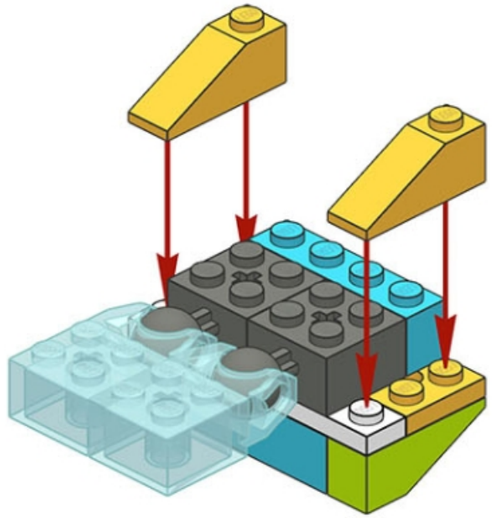

narka@gmail.com

ROBORISE-IT!
ROBOTIC EDUCATION

2x

25

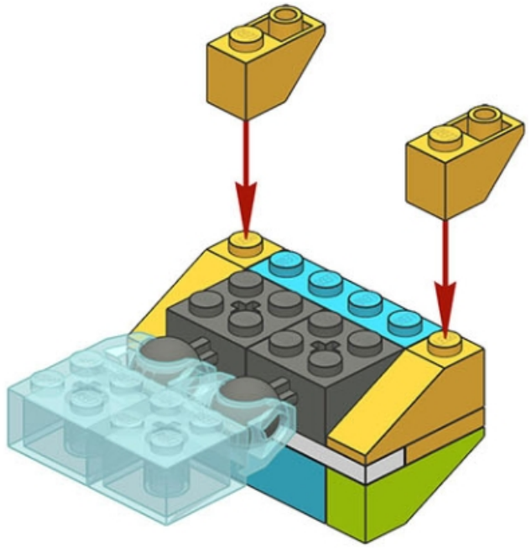

25/36

0

46

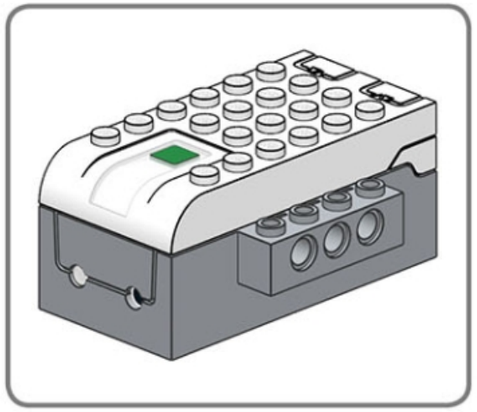

26

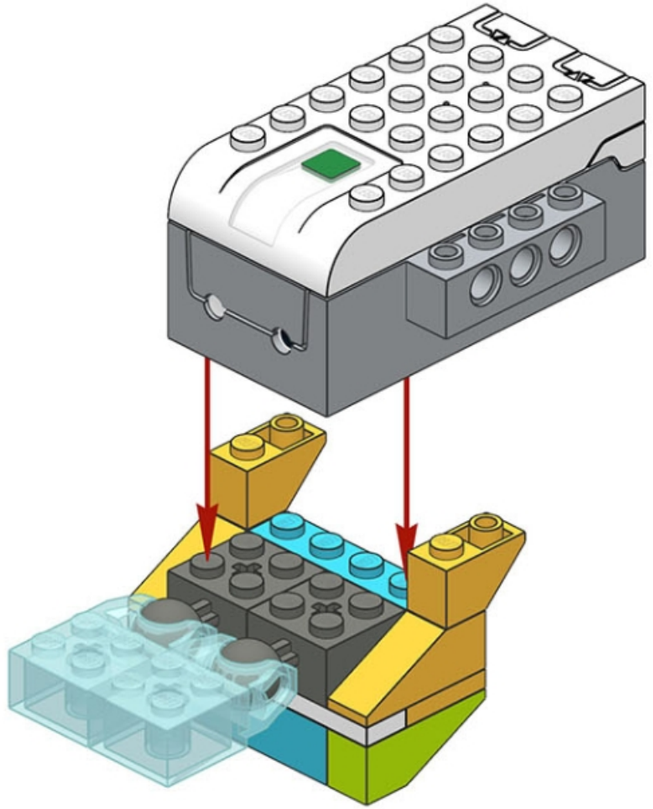

ROBORISE-IT!
ROBOTIC EDUCATION

nerrka@gmail.com

ROBORISE-IT!
ROBOTIC EDUCATION

27

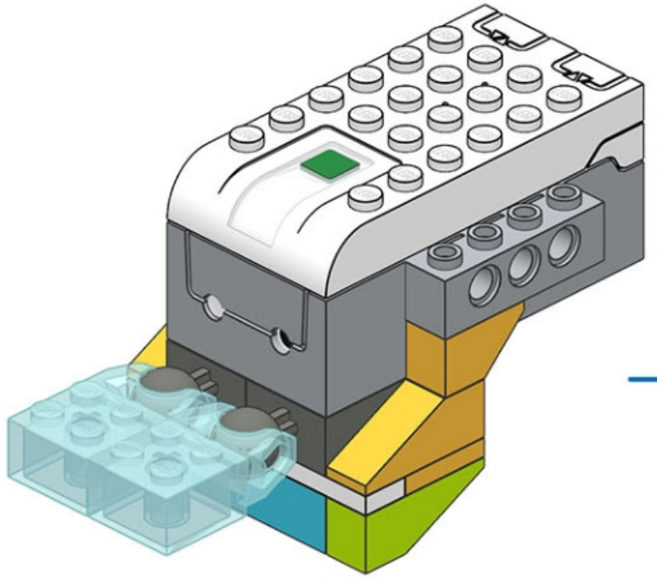

27/36

0

48

28

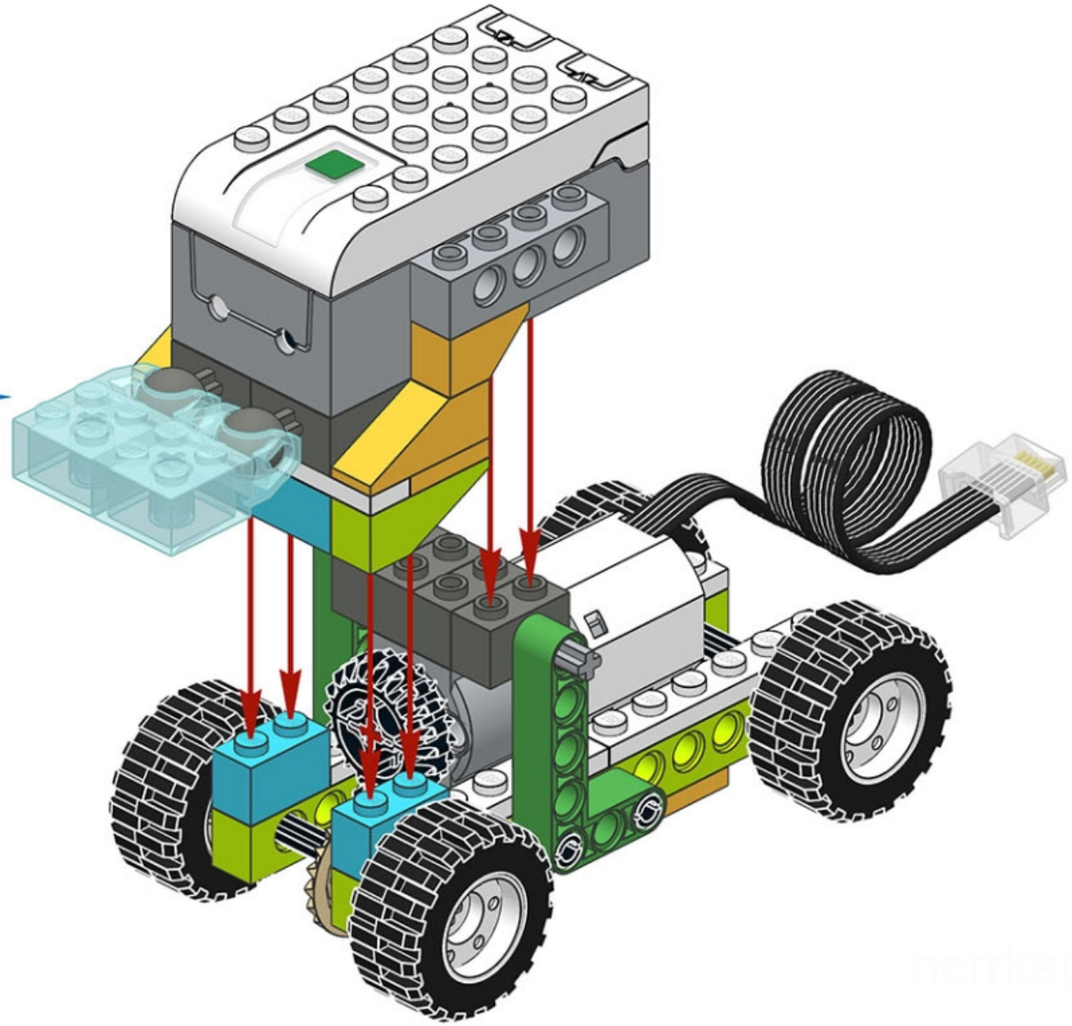

ROBORISE-IT!
ROBOTIC EDUCATION

marika@gmail.com

ROBORISE-IT!
ROBOTIC EDUCATION

29

nerika@gmail.com

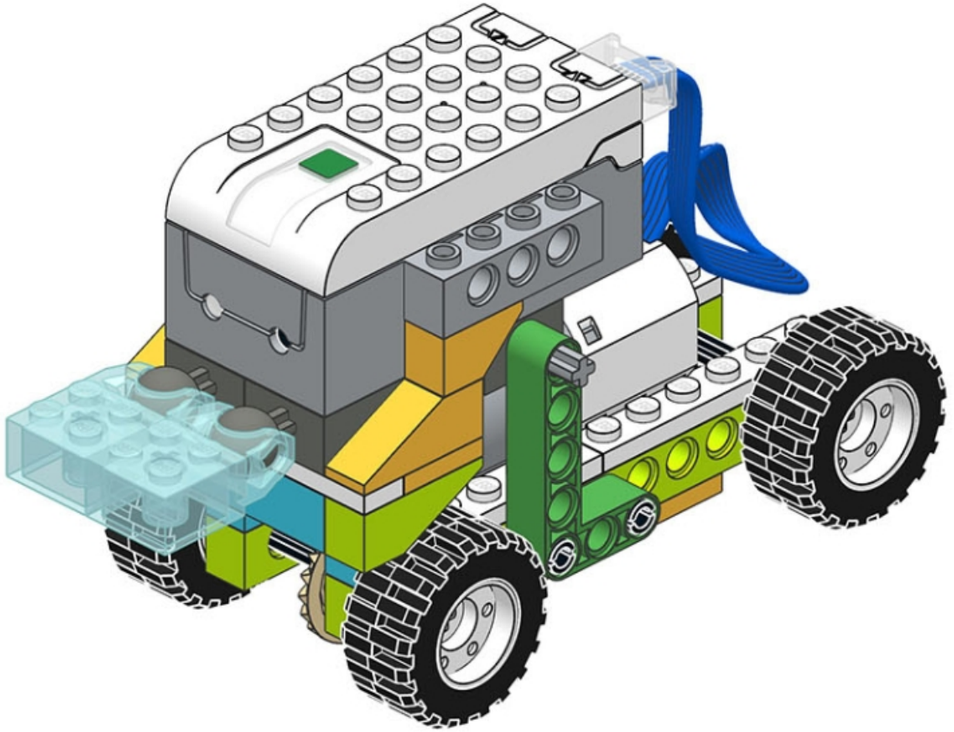

29/36

0

50

ROBORISE-IT!
ROBOTIC EDUCATION

30

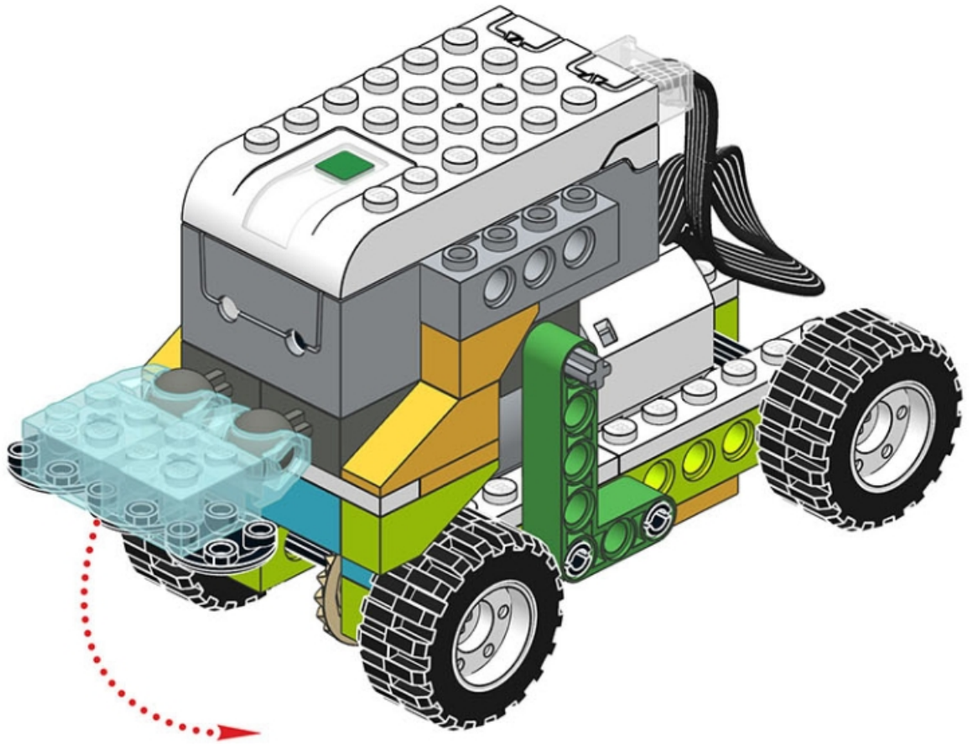

nemka@gmail.com

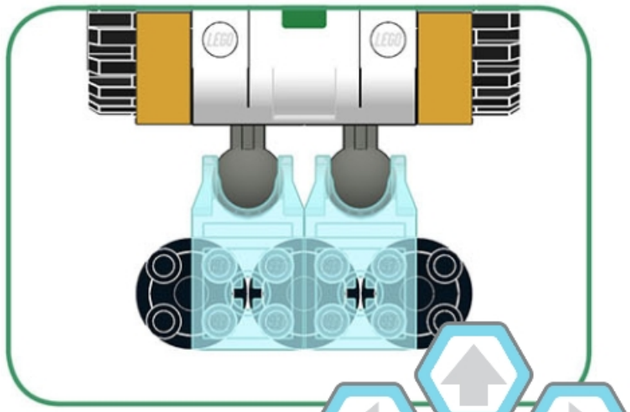

ROBORISE-IT!
ROBOTIC EDUCATION

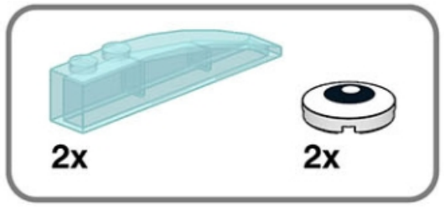

31

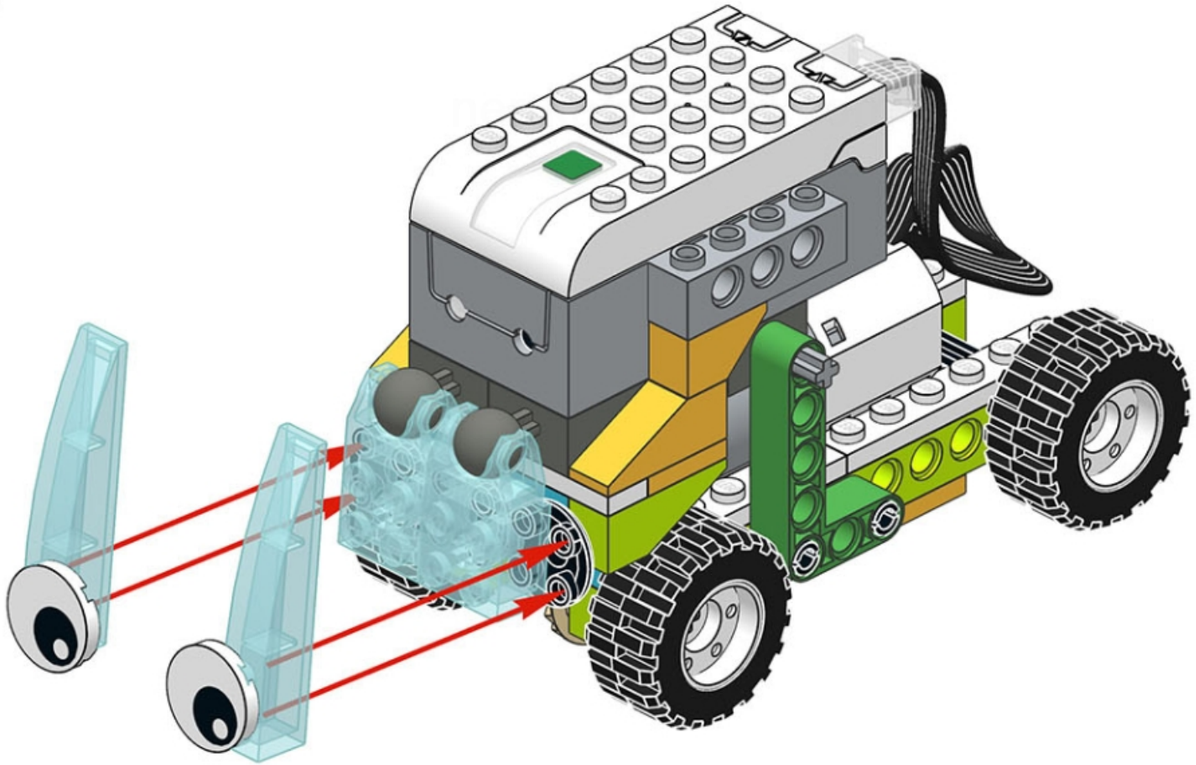

ROBORISE-IT!
ROBOTIC EDUCATION

1x

32

nerrka@gmail.com

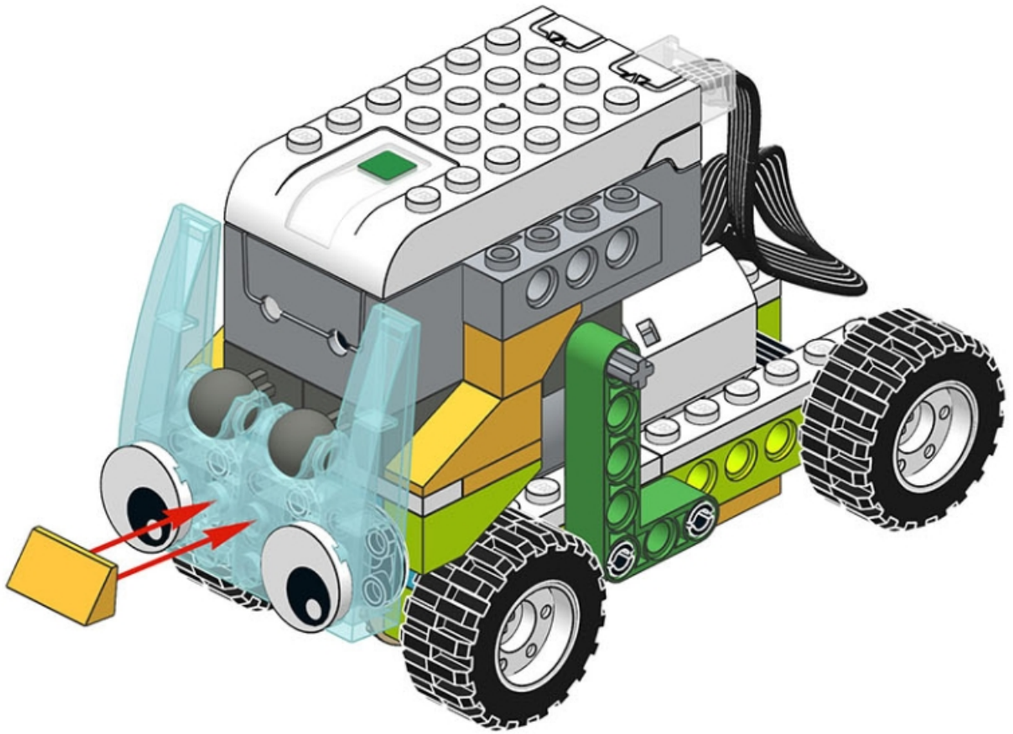

32/36

0

53

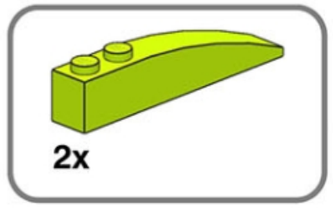

33

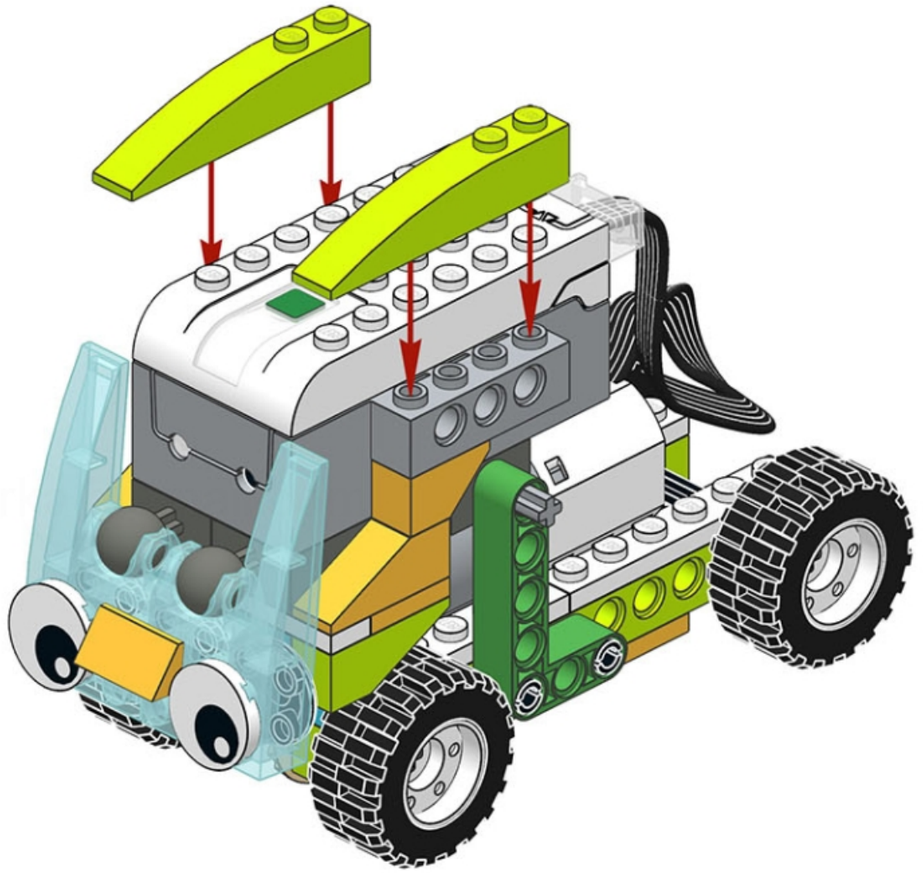

ROBORISE-IT!
ROBOTIC EDUCATION

2x
1x

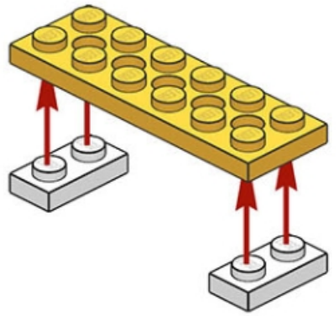

1

1x

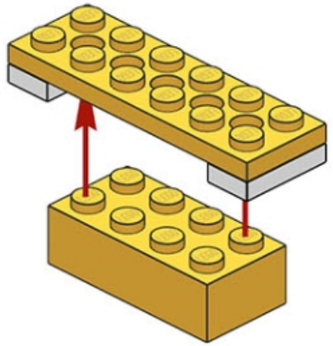

2

2x

3

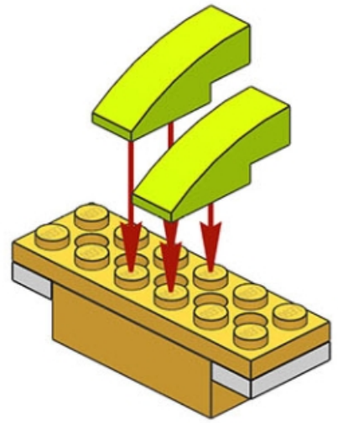

2x

4

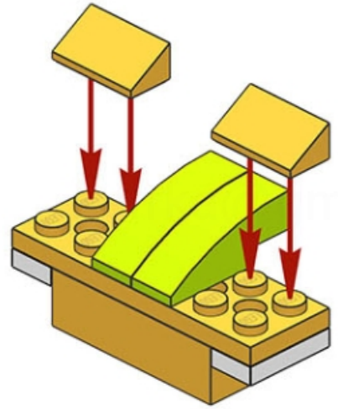

34/36

0

55

ROBORISE-IT!
ROBOTIC EDUCATION

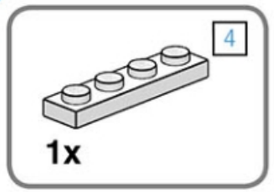

5

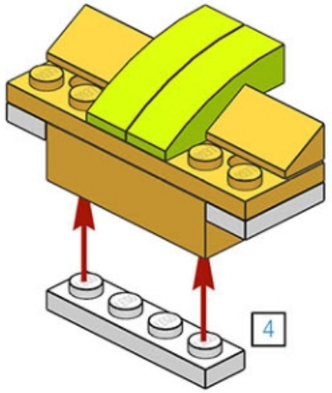

6

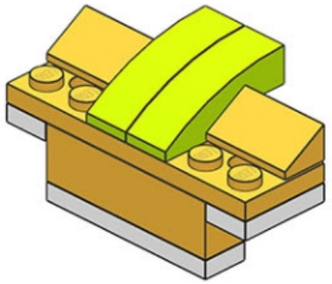

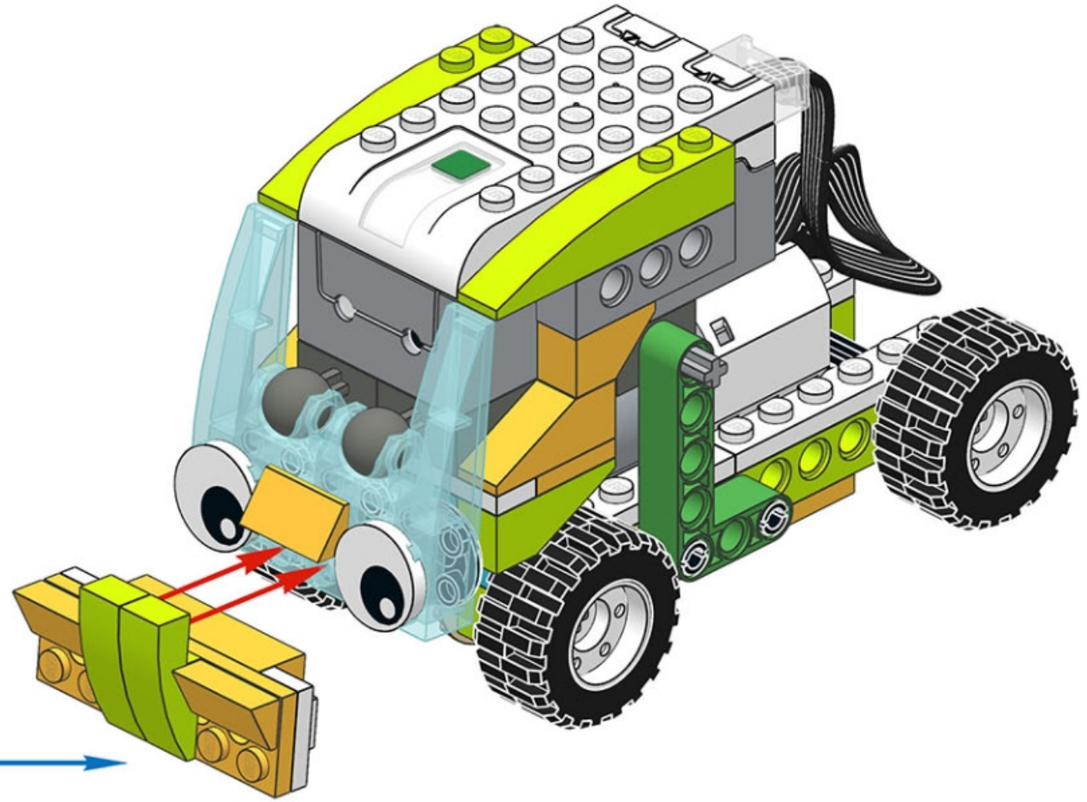

ROBORISE-IT!
ROBOTIC EDUCATION

36

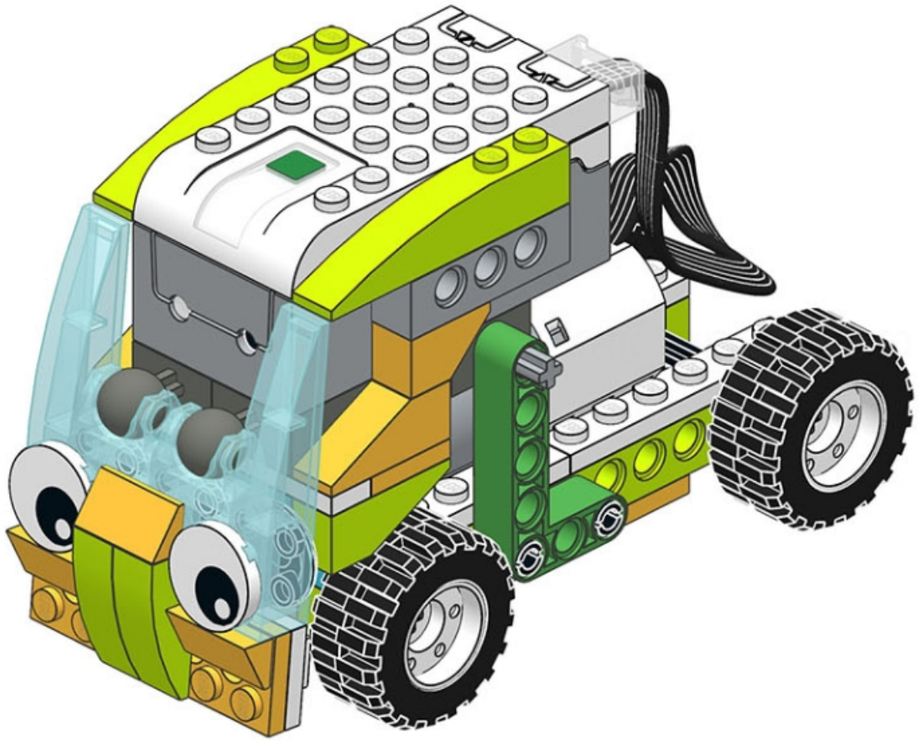

36/36

0

57

ROBORISE-IT!
ROBOTIC EDUCATION

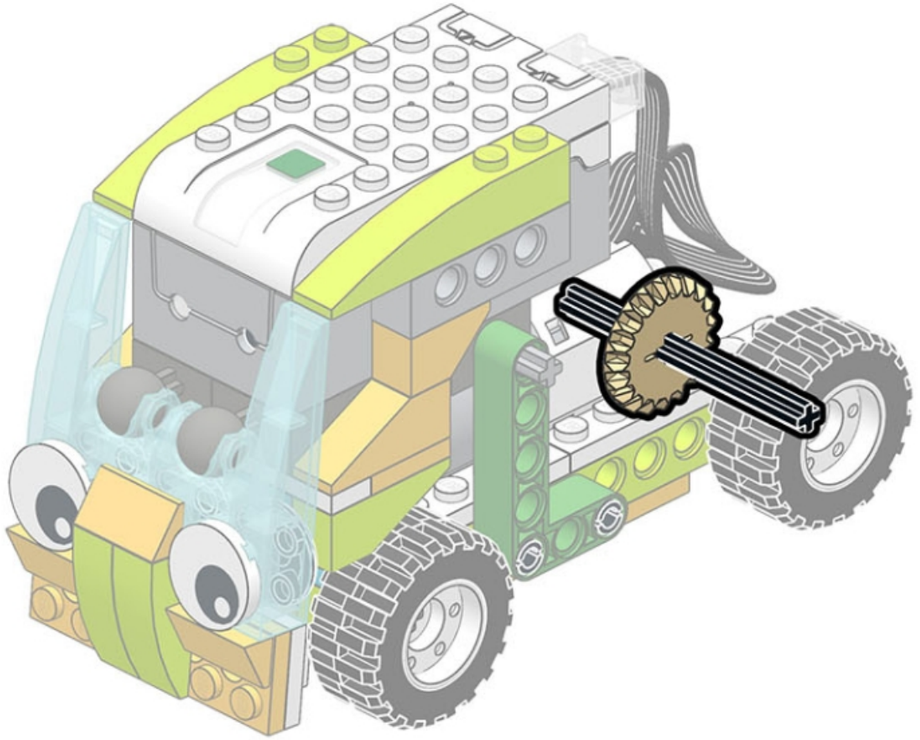

1/5

0

63

ROBORISE-IT!
ROBOTIC EDUCATION

37

nerrka@gmail.com

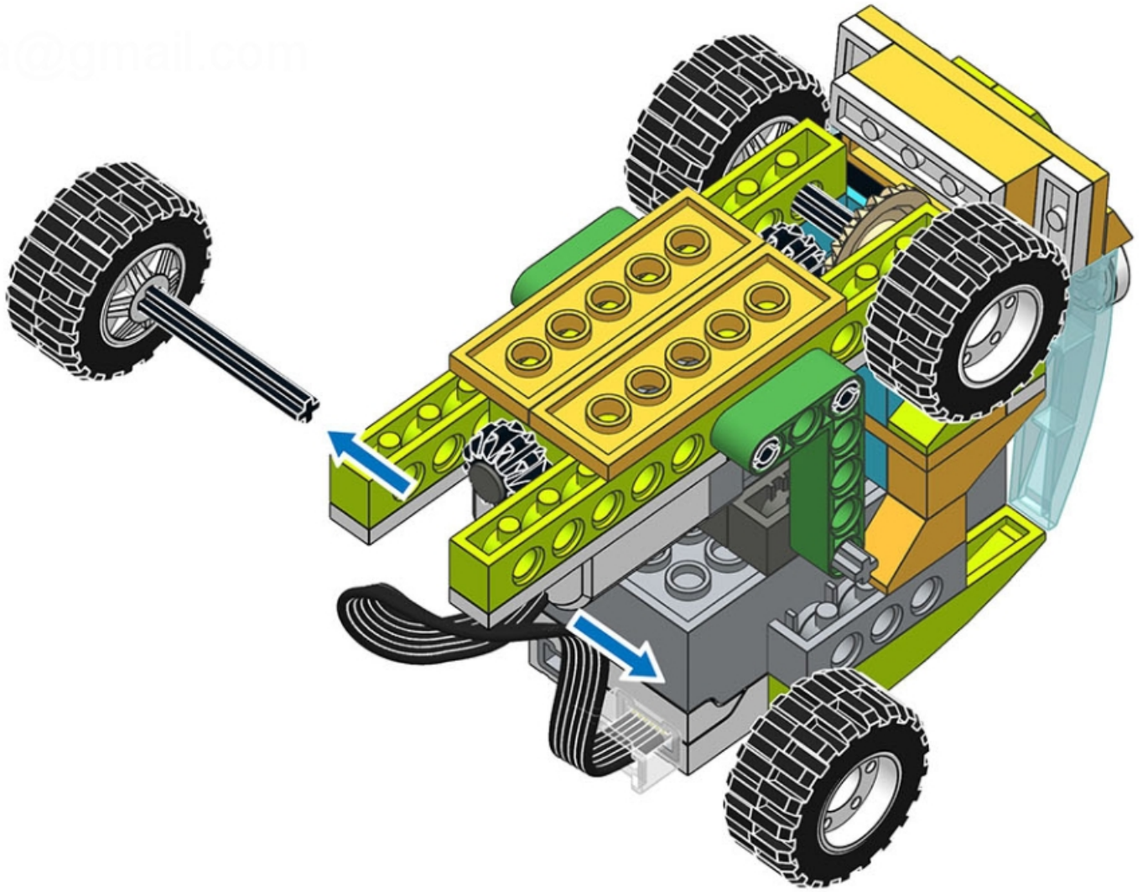

2/5

0

64

ROBORISE-IT!
ROBOTIC EDUCATION

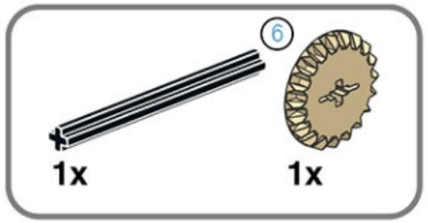

38

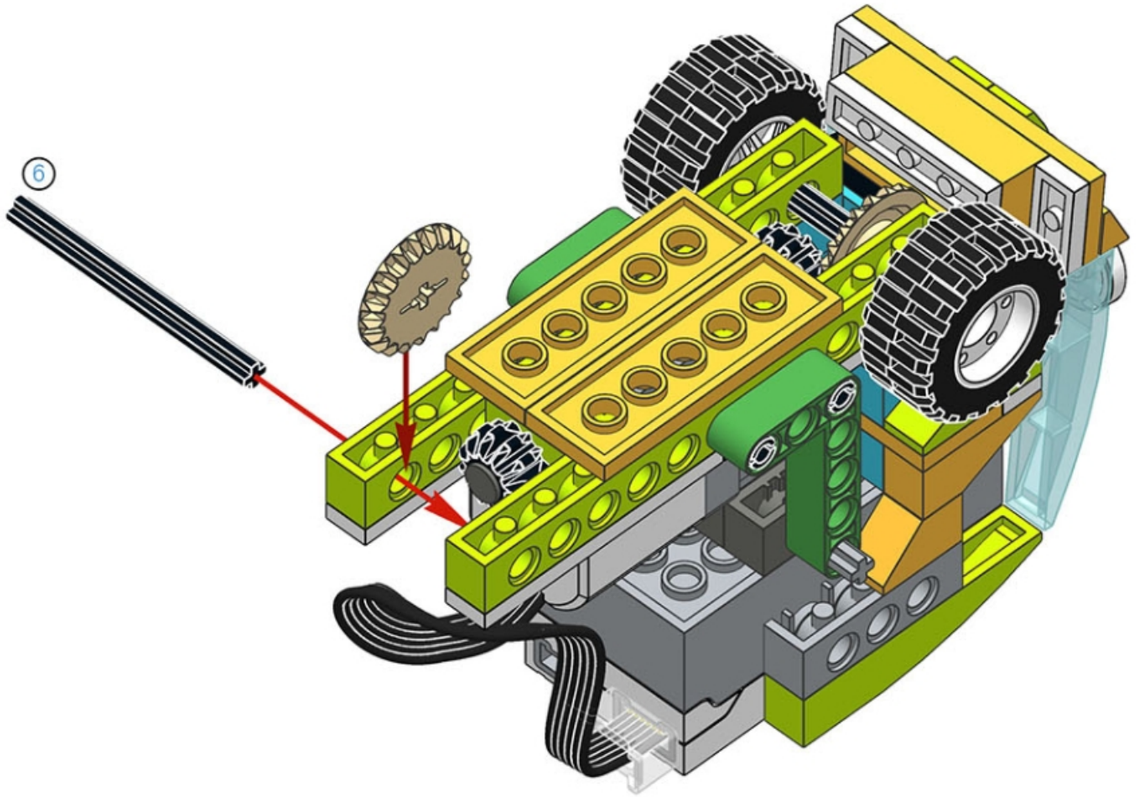

nerka@gmail.com

ROBORISE-IT!
ROBOTIC EDUCATION

39

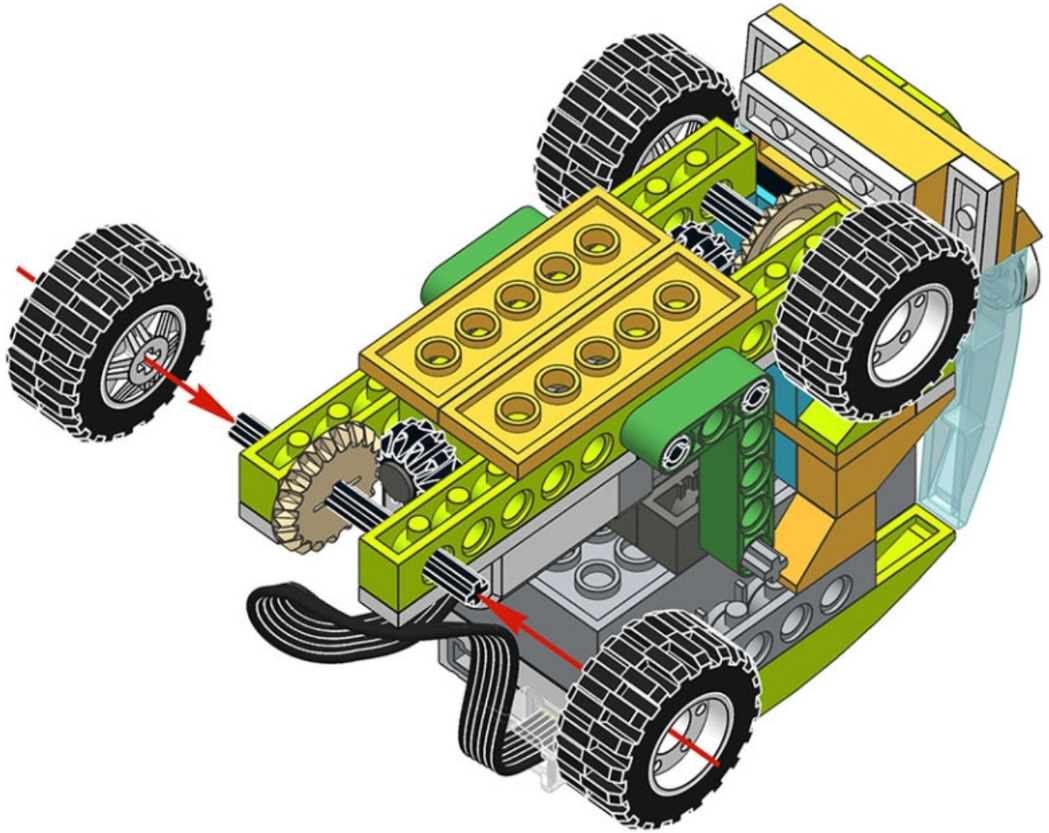

marka@gmail.com

ROBORISE-IT!
ROBOTIC EDUCATION

40

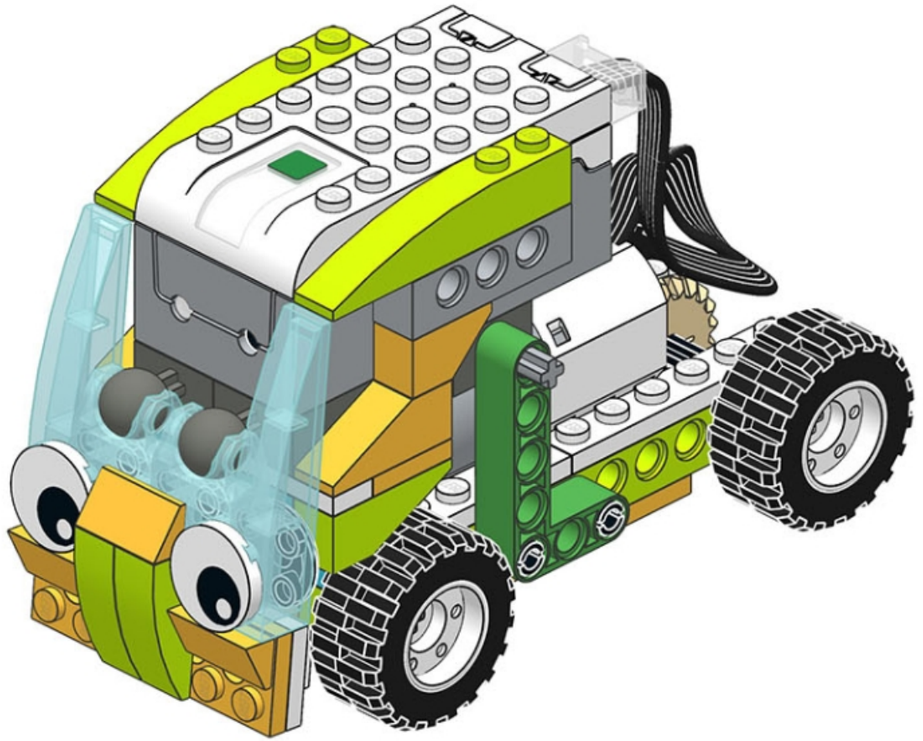

5/5

0

67

ROBORISE-IT!
ROBOTIC EDUCATION

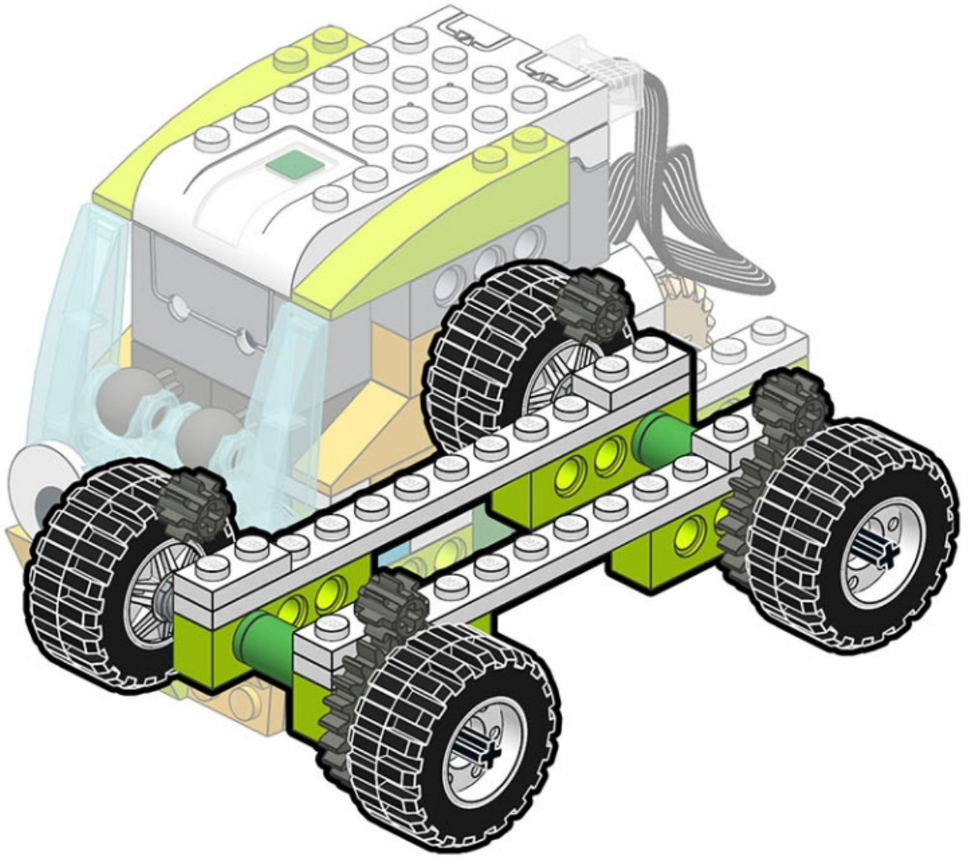

1/10

0

76

ROBORISE-IT!
ROBOTIC EDUCATION

41

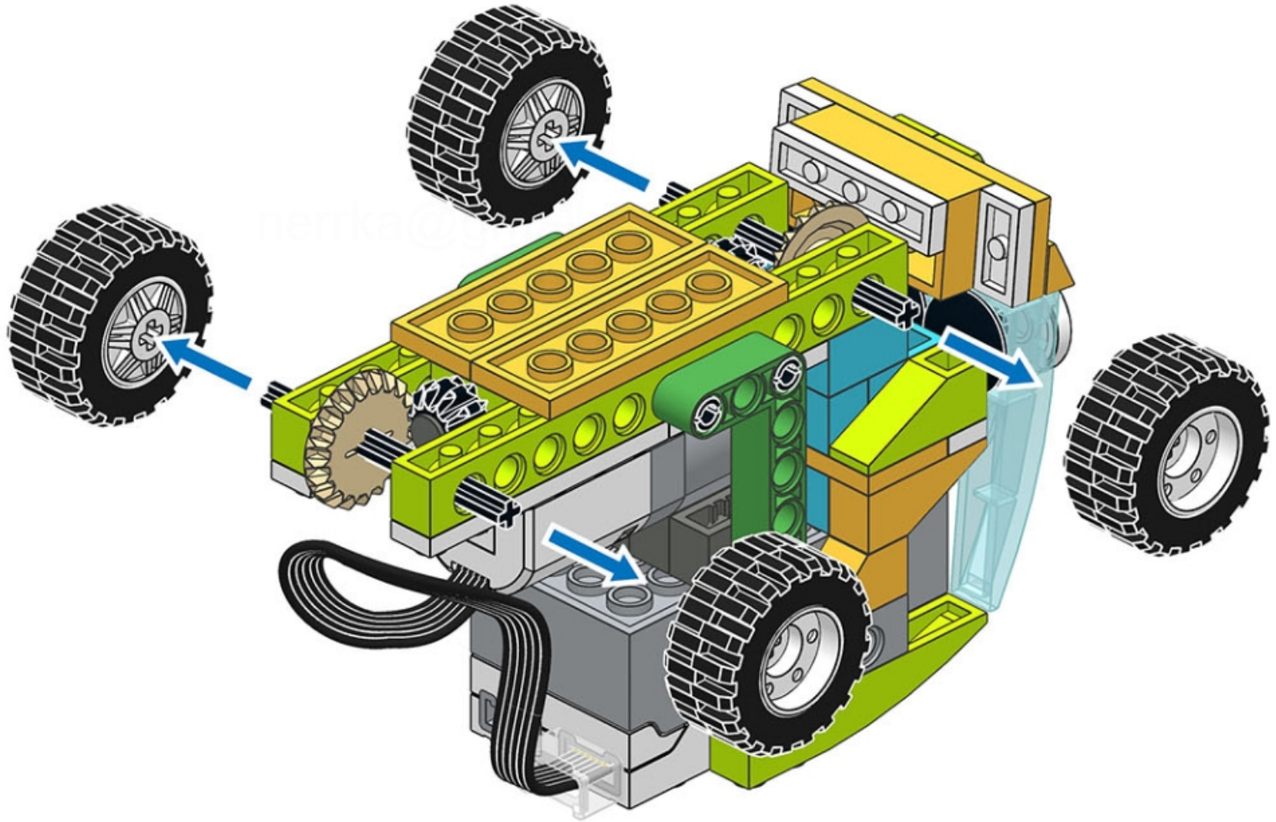

2/10

0

77

nerrka@gmail.com

ROBORISE-IT!
ROBOTIC EDUCATION

4x

42

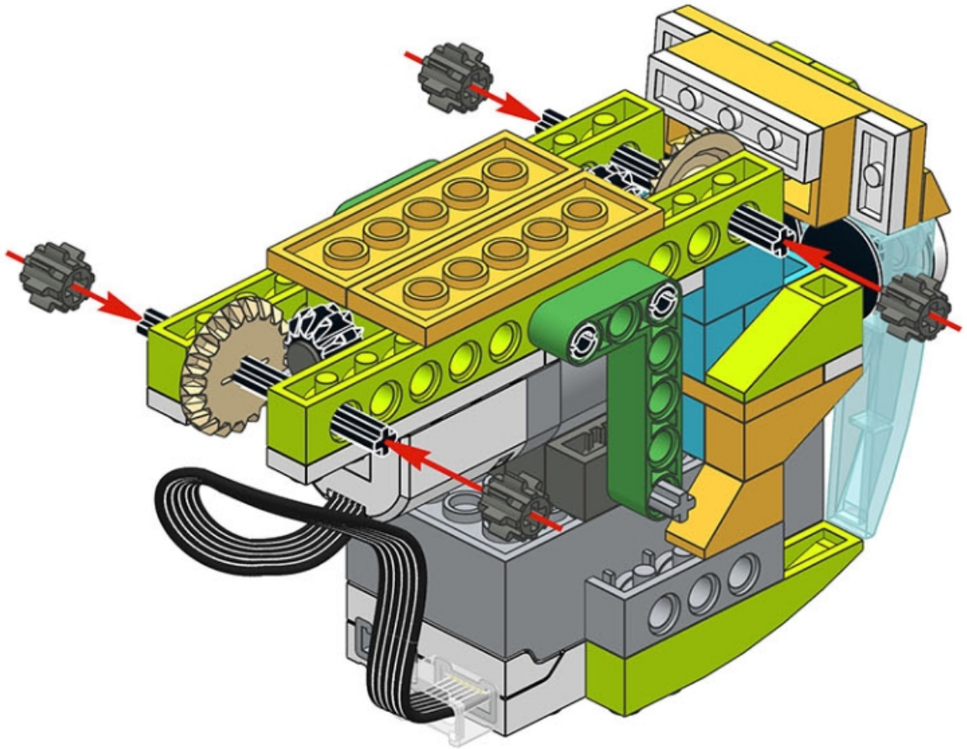

3/10

0

78

ROBORISE-IT!
ROBOTIC EDUCATION

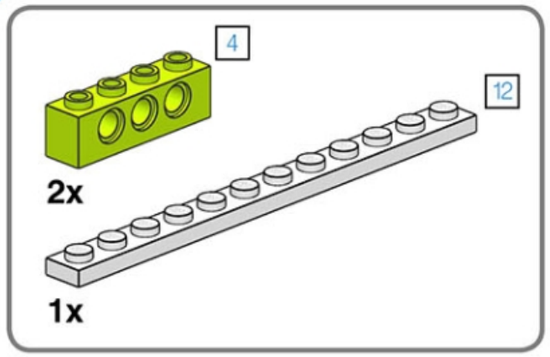

1

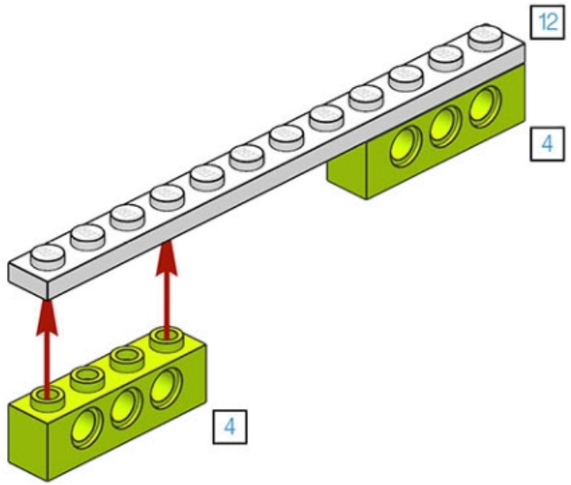

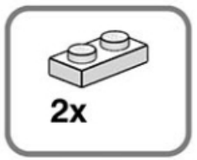

2

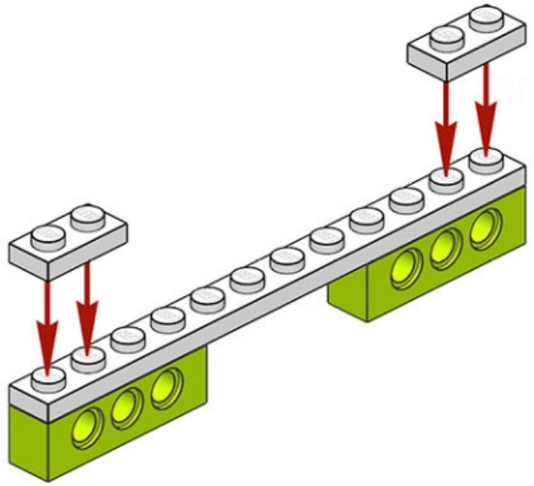

3

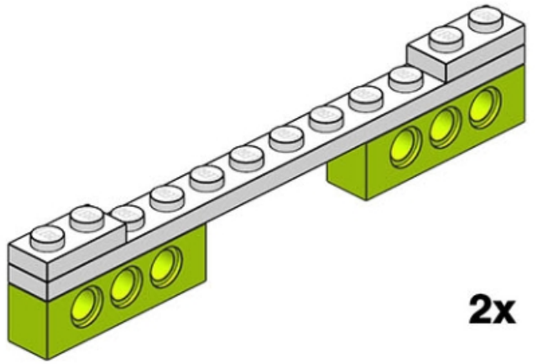

erka@gmail.com

ROBORISE-IT!
ROBOTIC EDUCATION

44

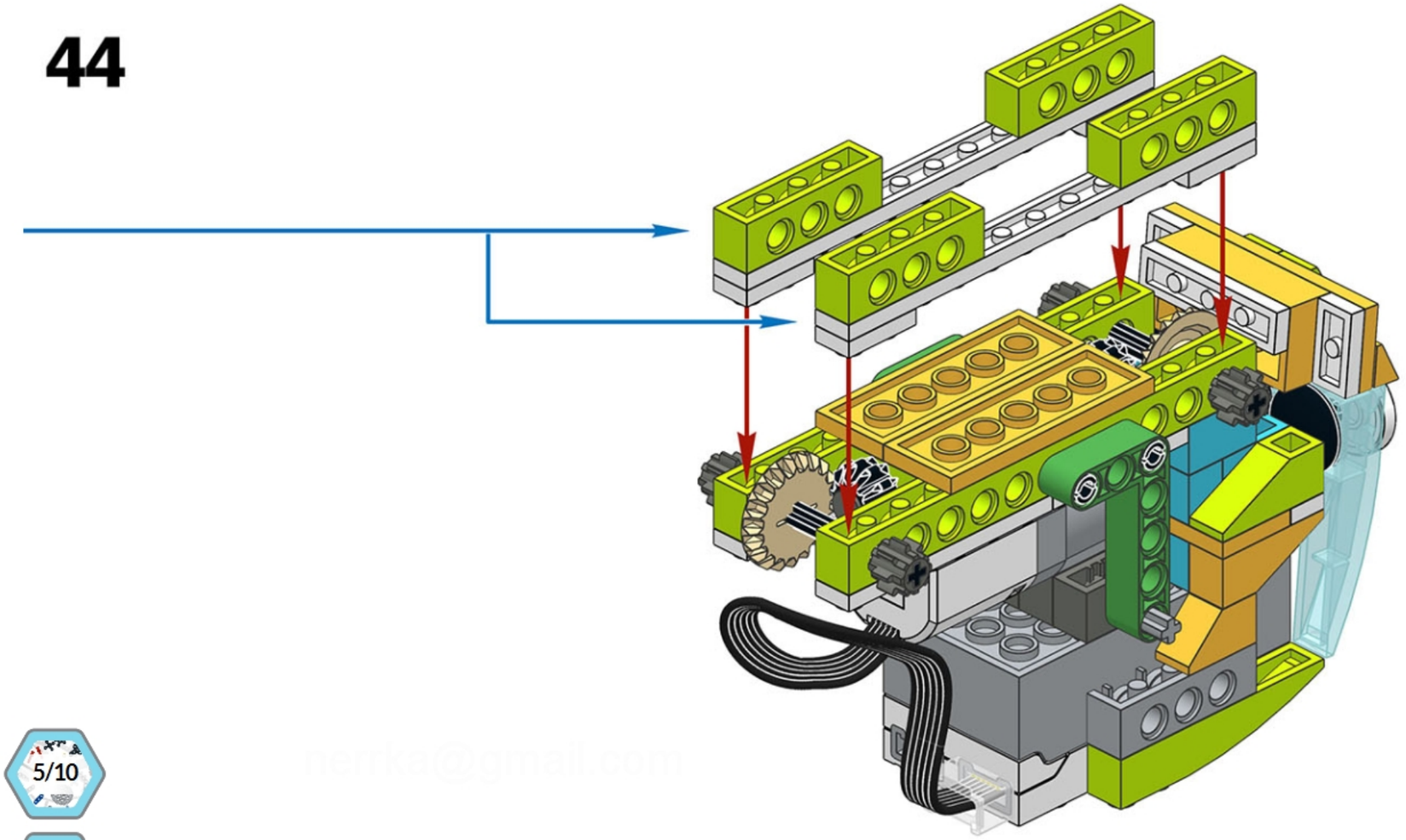

nerrka@gmail.com

5/10

0

80

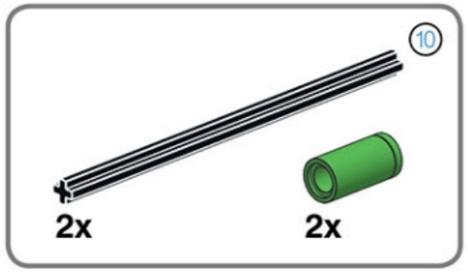

45

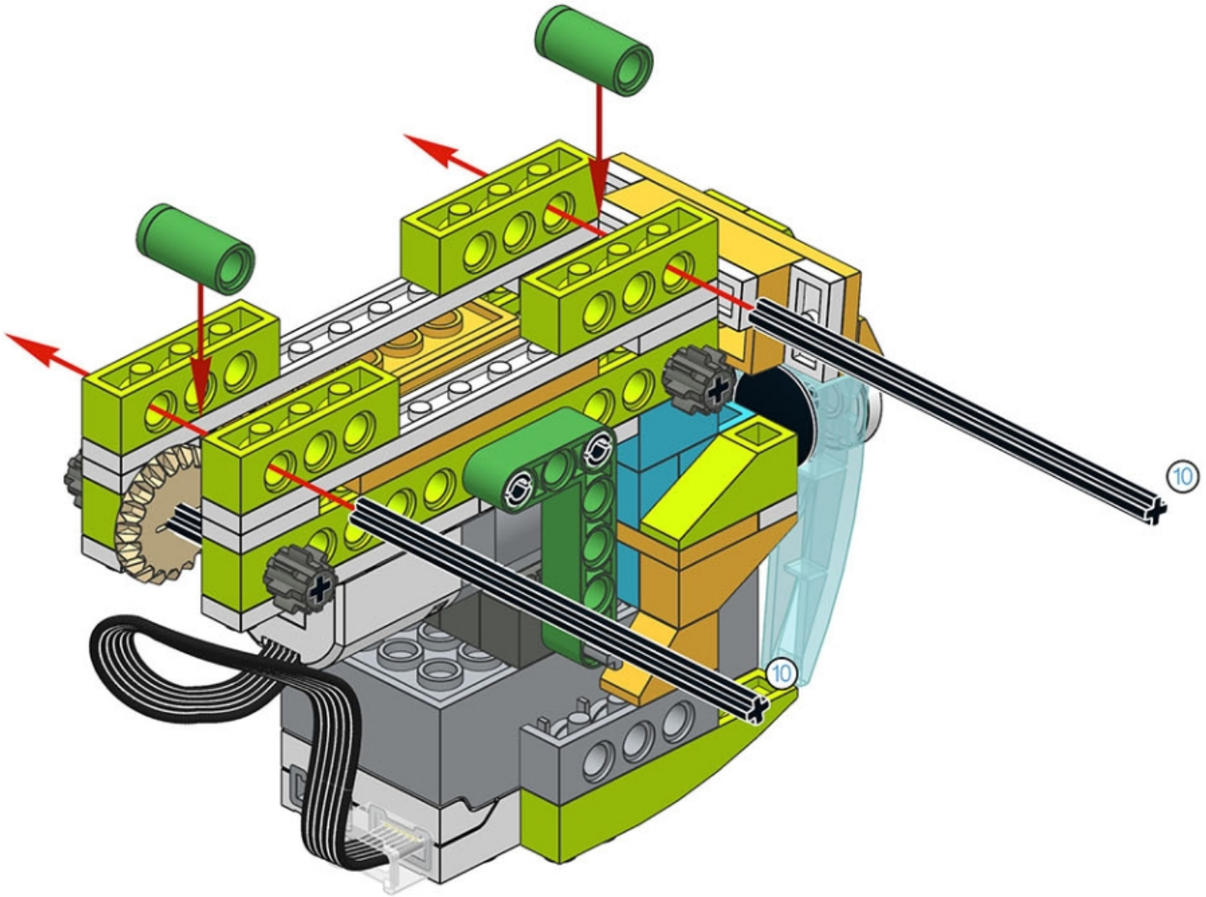

merka@gmail.com

ROBORISE-IT!
ROBOTIC EDUCATION

46

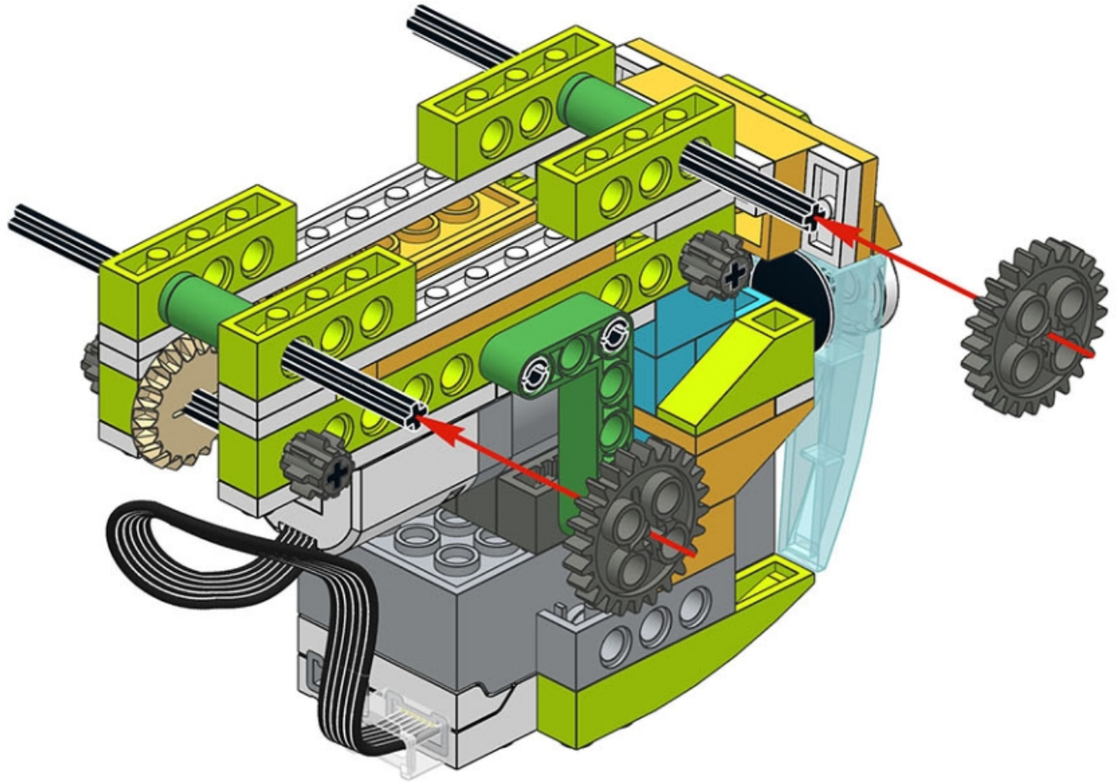

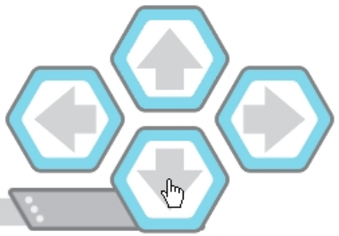

nerka@gmail.com

ROBORISE-IT!
ROBOTIC EDUCATION

47

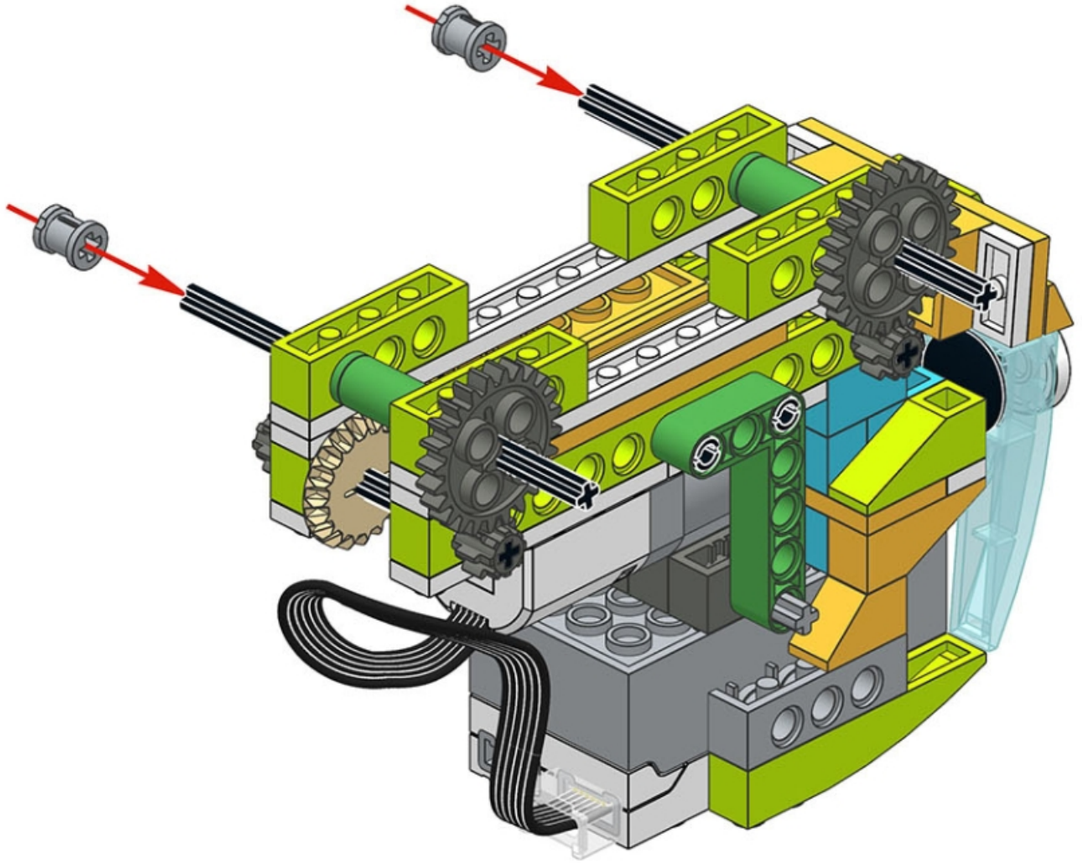

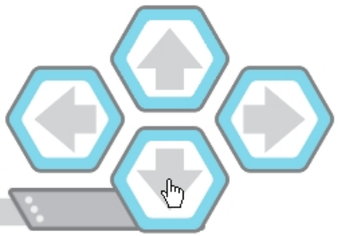

ROBORISE-IT!
ROBOTIC EDUCATION

48

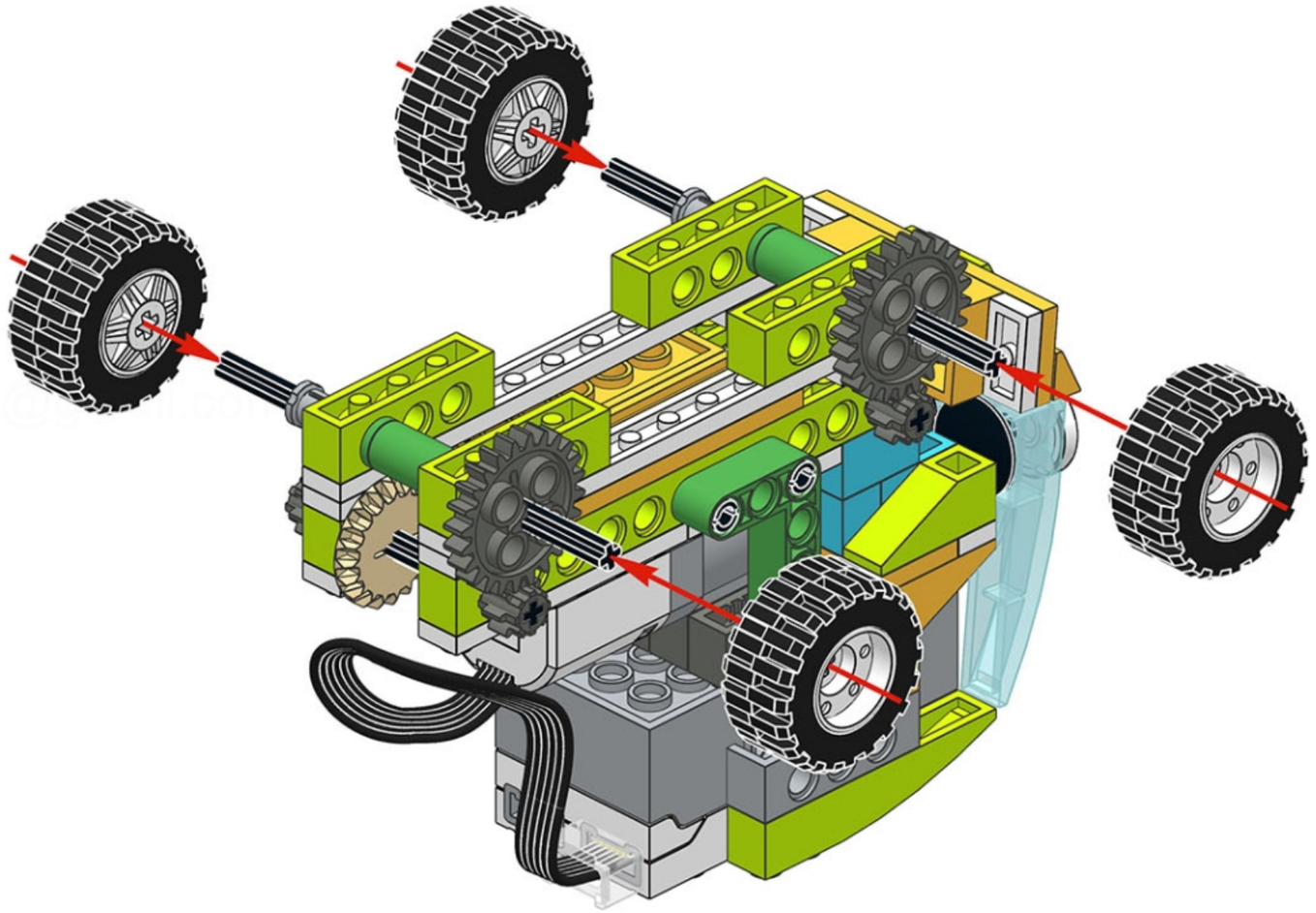

9/10

0

84

ROBORISE-IT!
ROBOTIC EDUCATION

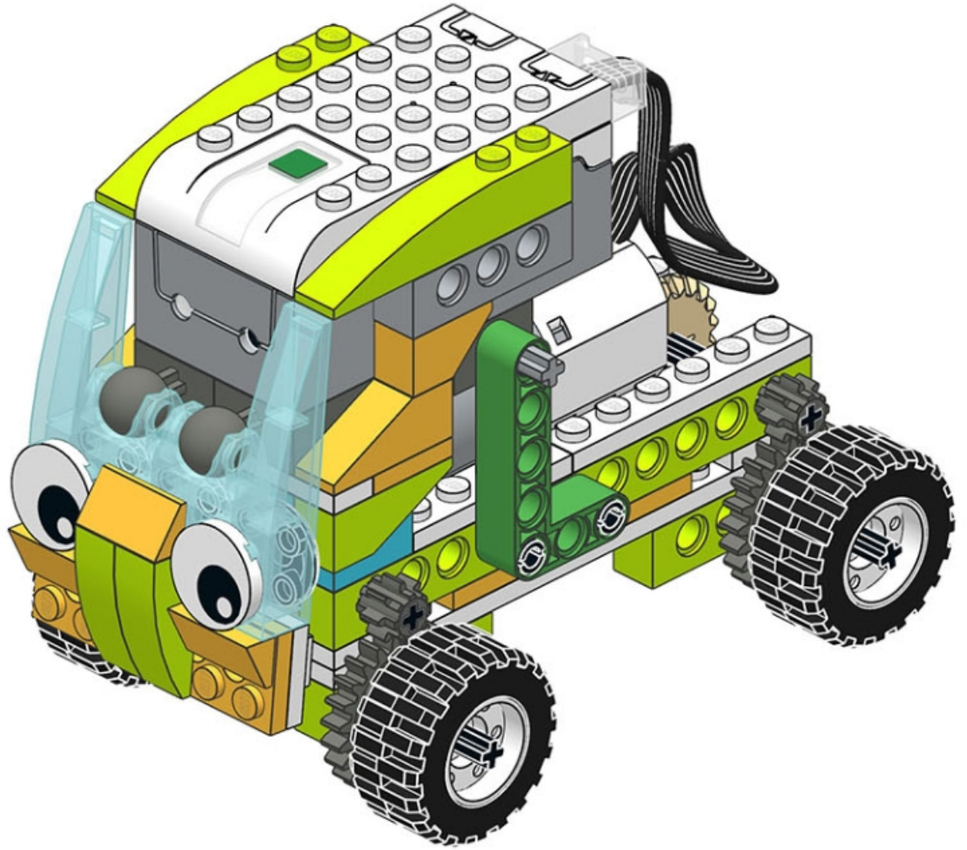

10/10

0

85

nerrka@gmail.com

ROBORISE-IT!
ROBOTIC EDUCATION

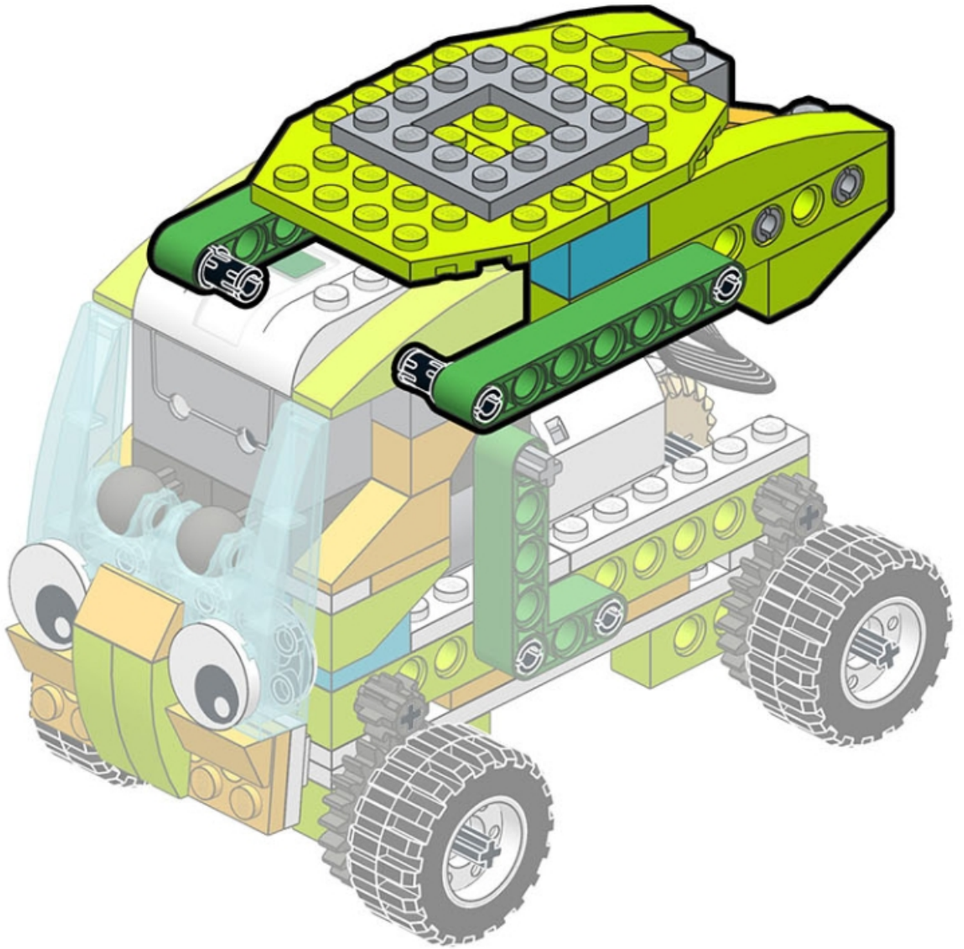

1/12

0

88

nerike@gmail.com

ROBORISE-IT!
ROBOTIC EDUCATION

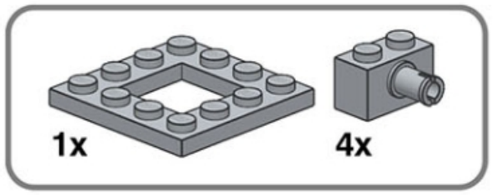

50

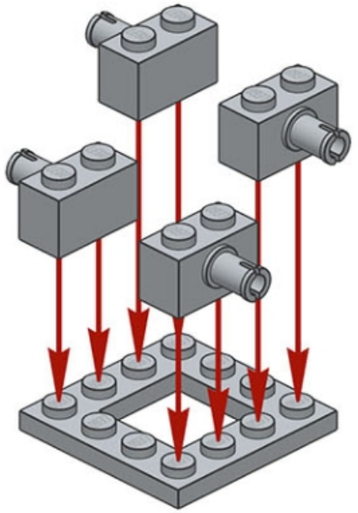

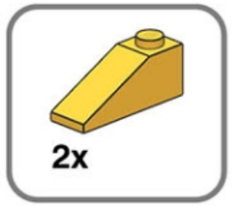

51

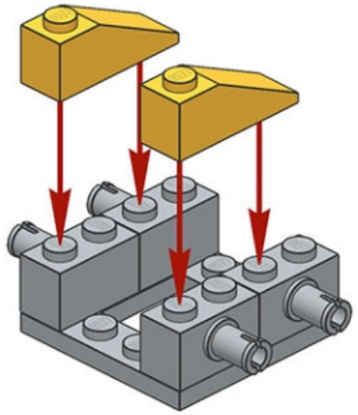

ROBORISE-IT!
ROBOTIC EDUCATION

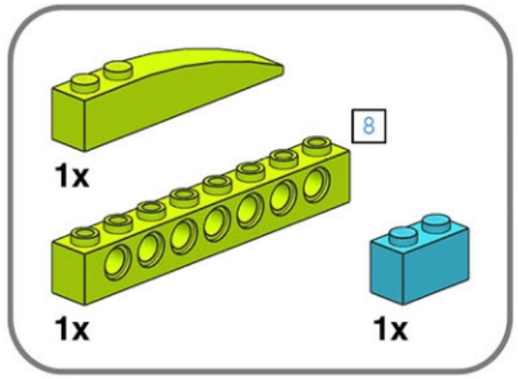

2

1

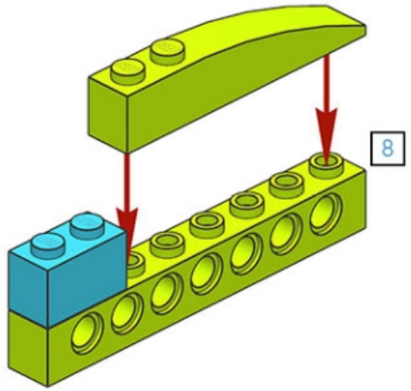

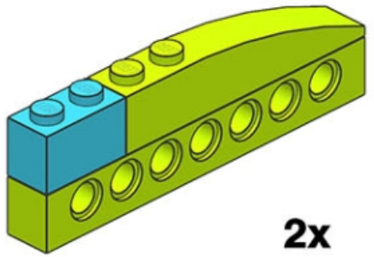

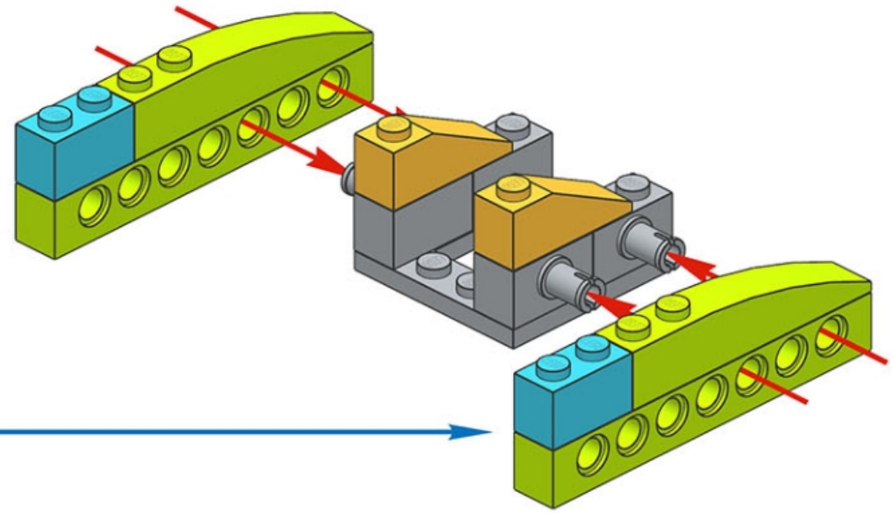

ROBORISE-IT!
ROBOTIC EDUCATION

53

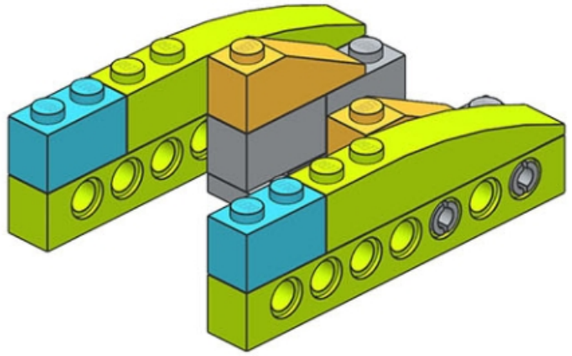

5/12

0

92

ROBORISE-IT!
ROBOTIC EDUCATION

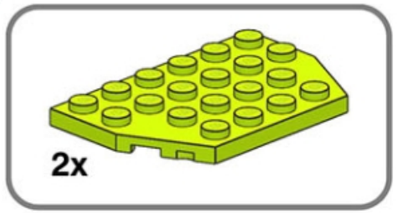

1

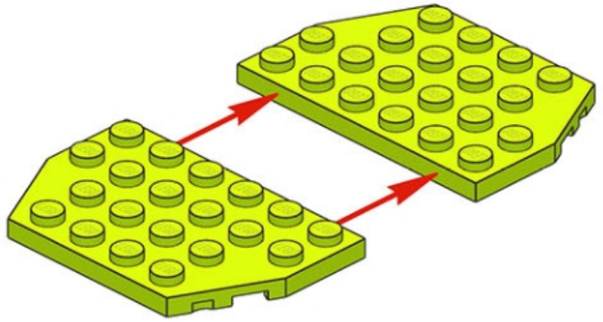

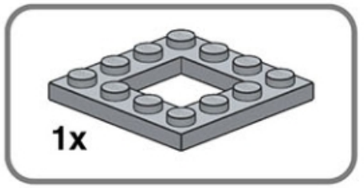

2

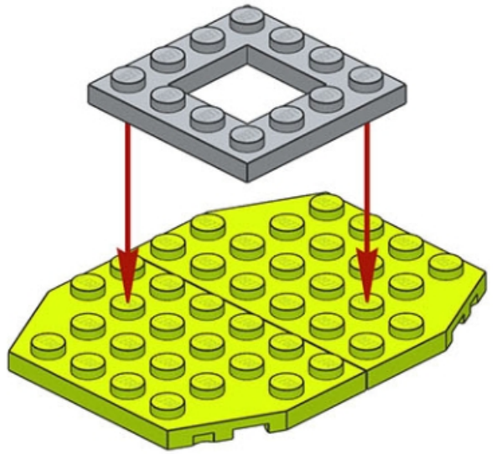

3

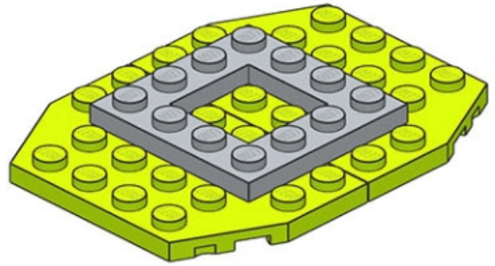

nerrka@gmail.com

6/12

0

93

ROBORISE-IT!
ROBOTIC EDUCATION

55

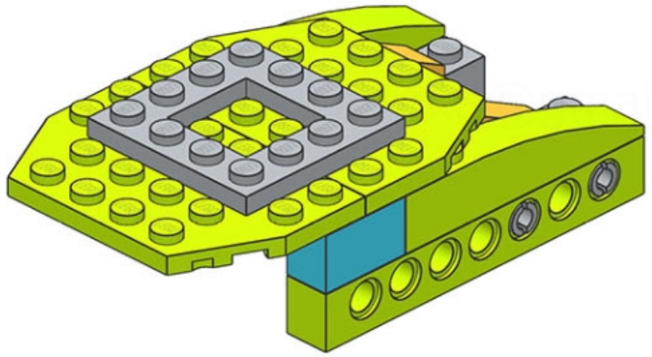

7/12

0

94

nerrka@gmail.com

ROBORISE-IT!
ROBOTIC EDUCATION

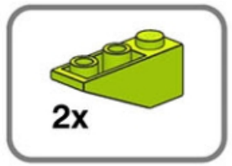

56

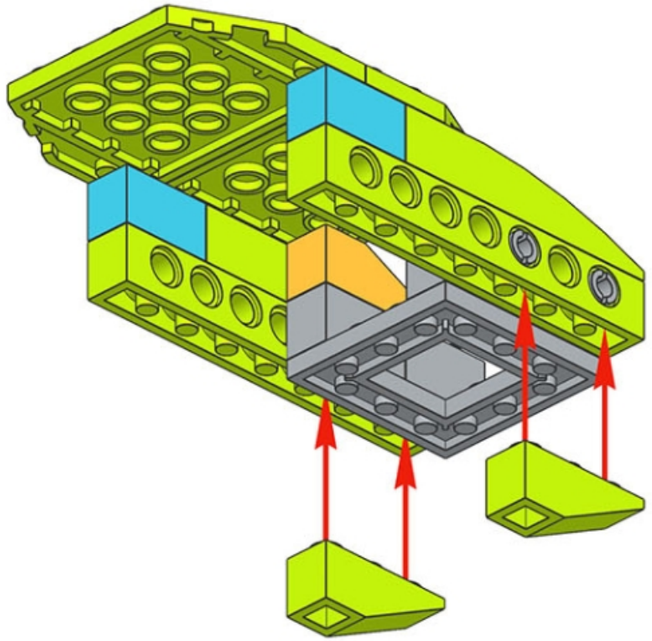

ROBORISE-IT!
ROBOTIC EDUCATION

57

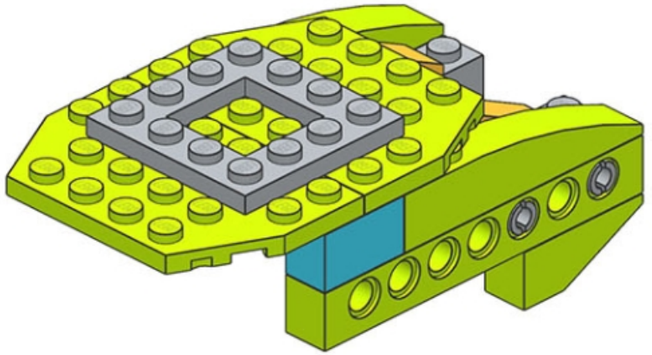

nerisa@gmail.com

9/12

0

96

ROBORISE-IT!
ROBOTIC EDUCATION

58

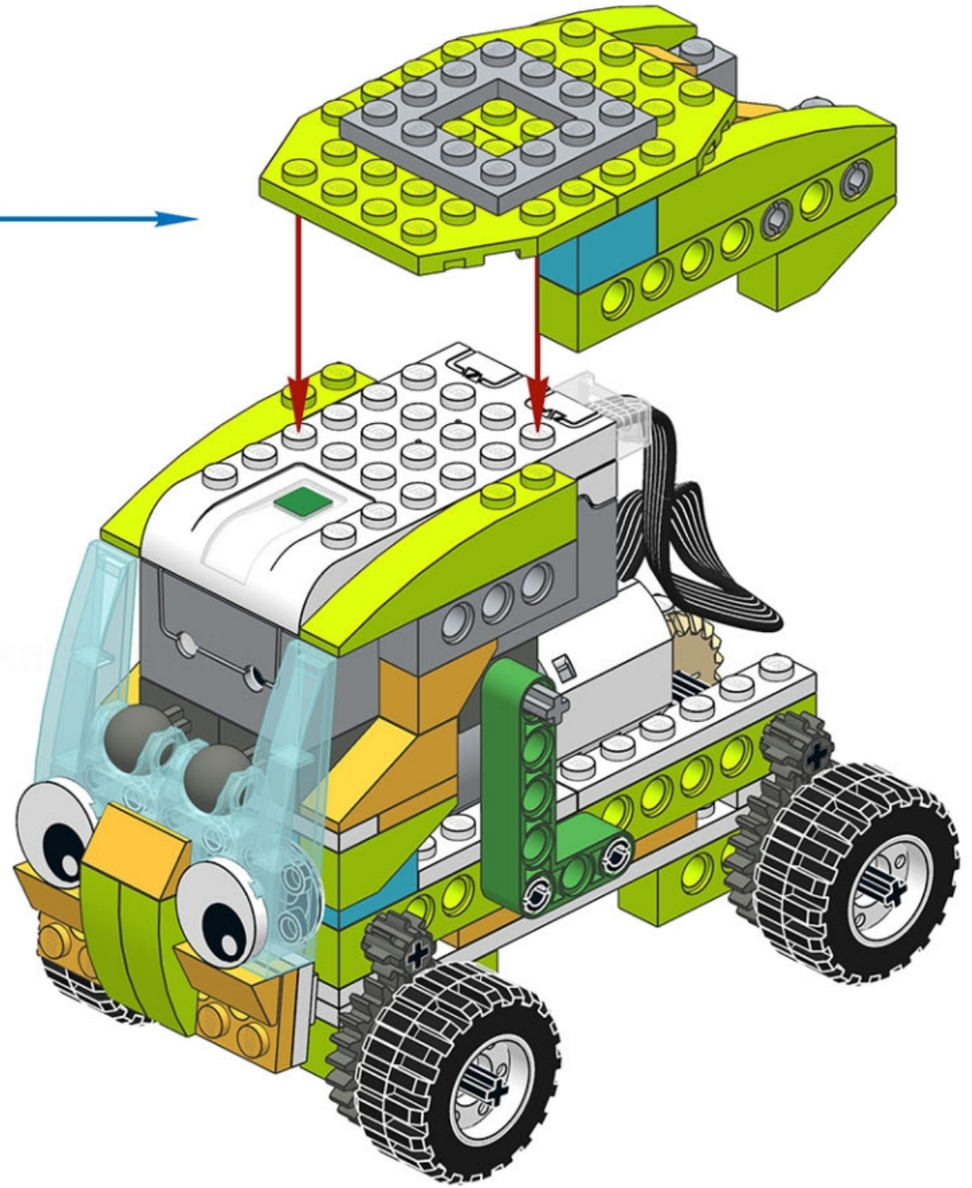

10/12

0

97

ROBORISE-IT!
ROBOTIC EDUCATION

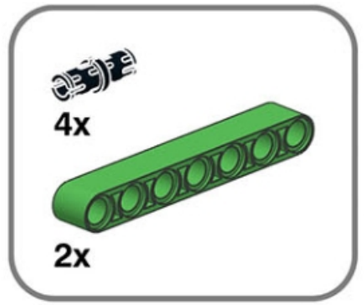

59

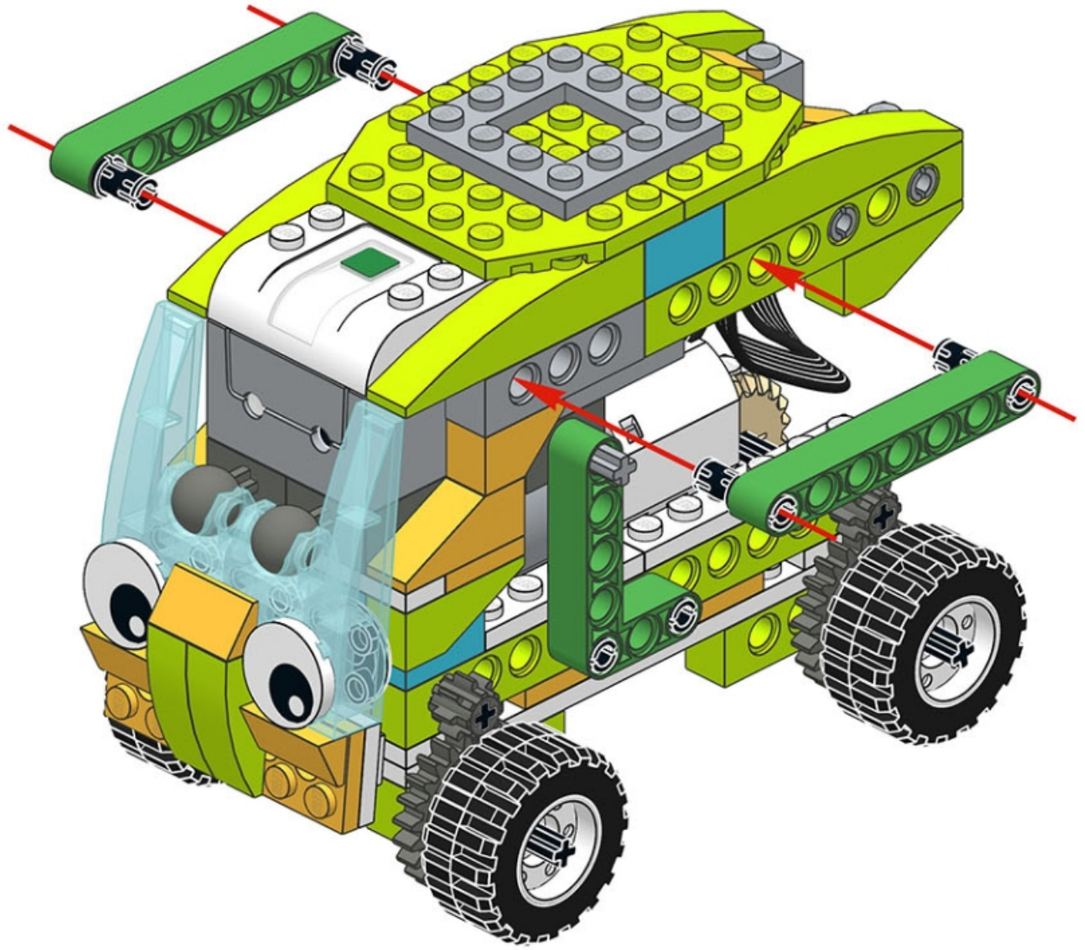

ROBORISE-IT!
ROBOTIC EDUCATION

60

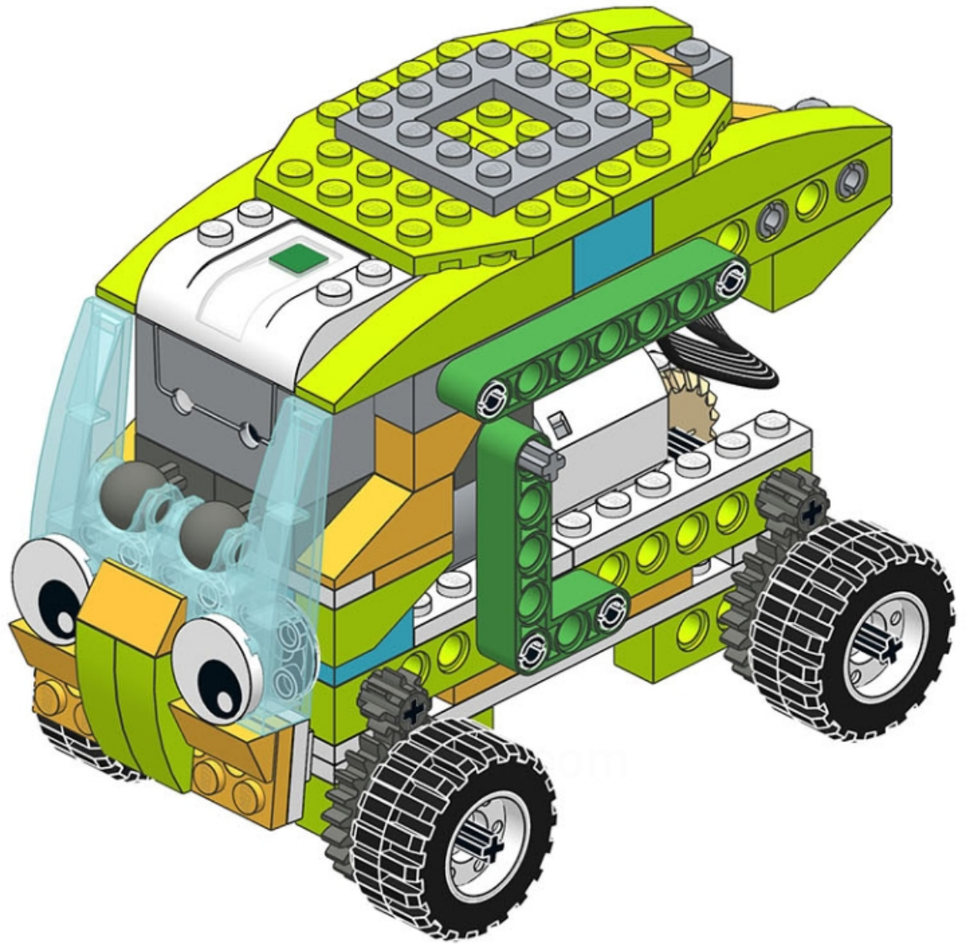

12/12

0

99

ROBORISE-IT!
ROBOTIC EDUCATION

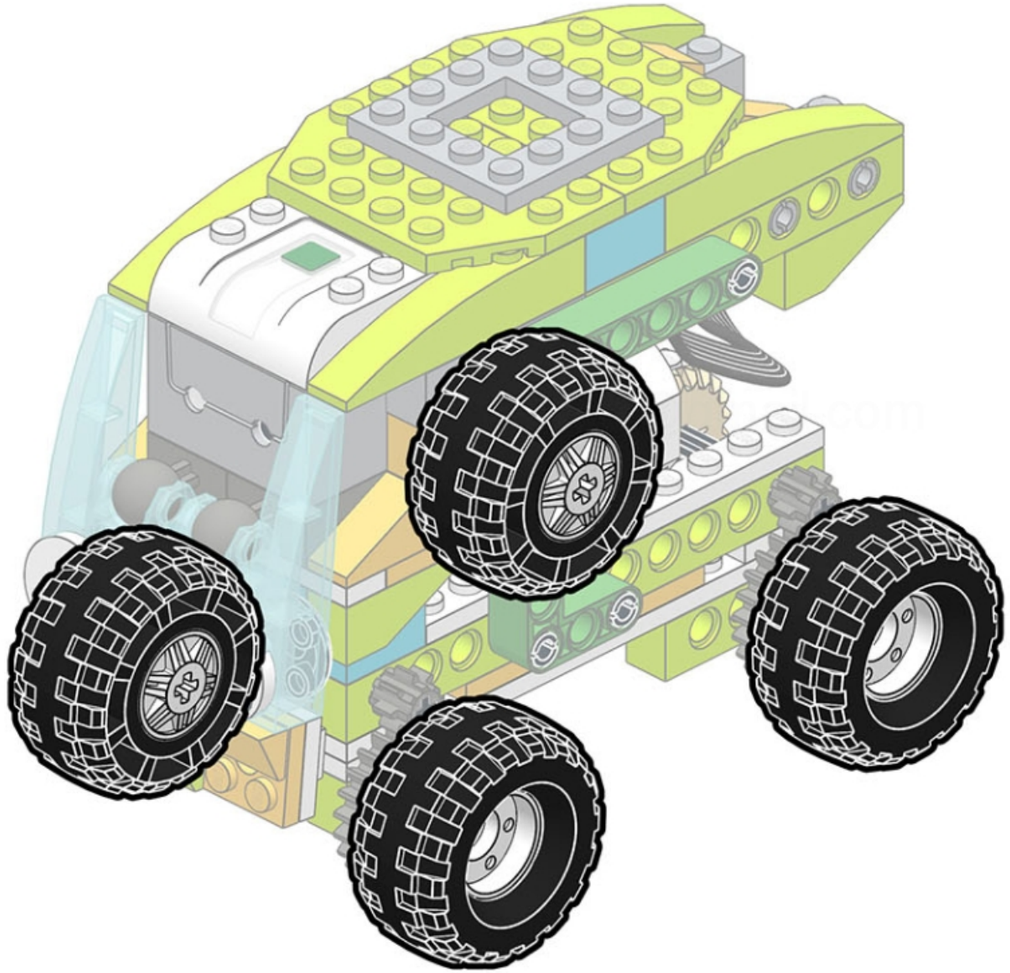

1/4

0

101

ROBORISE-IT!
ROBOTIC EDUCATION

61

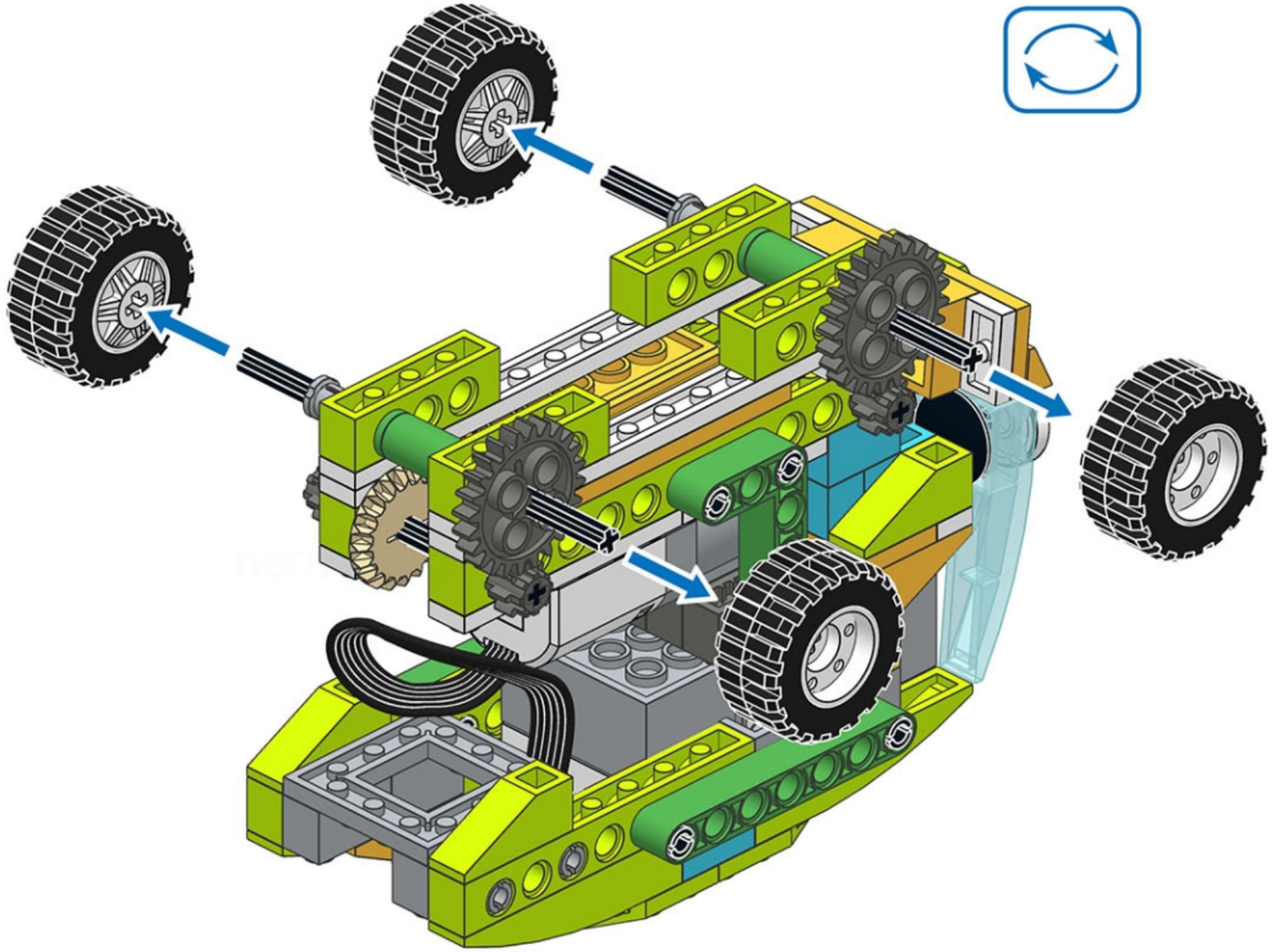

2/4

0

102

62

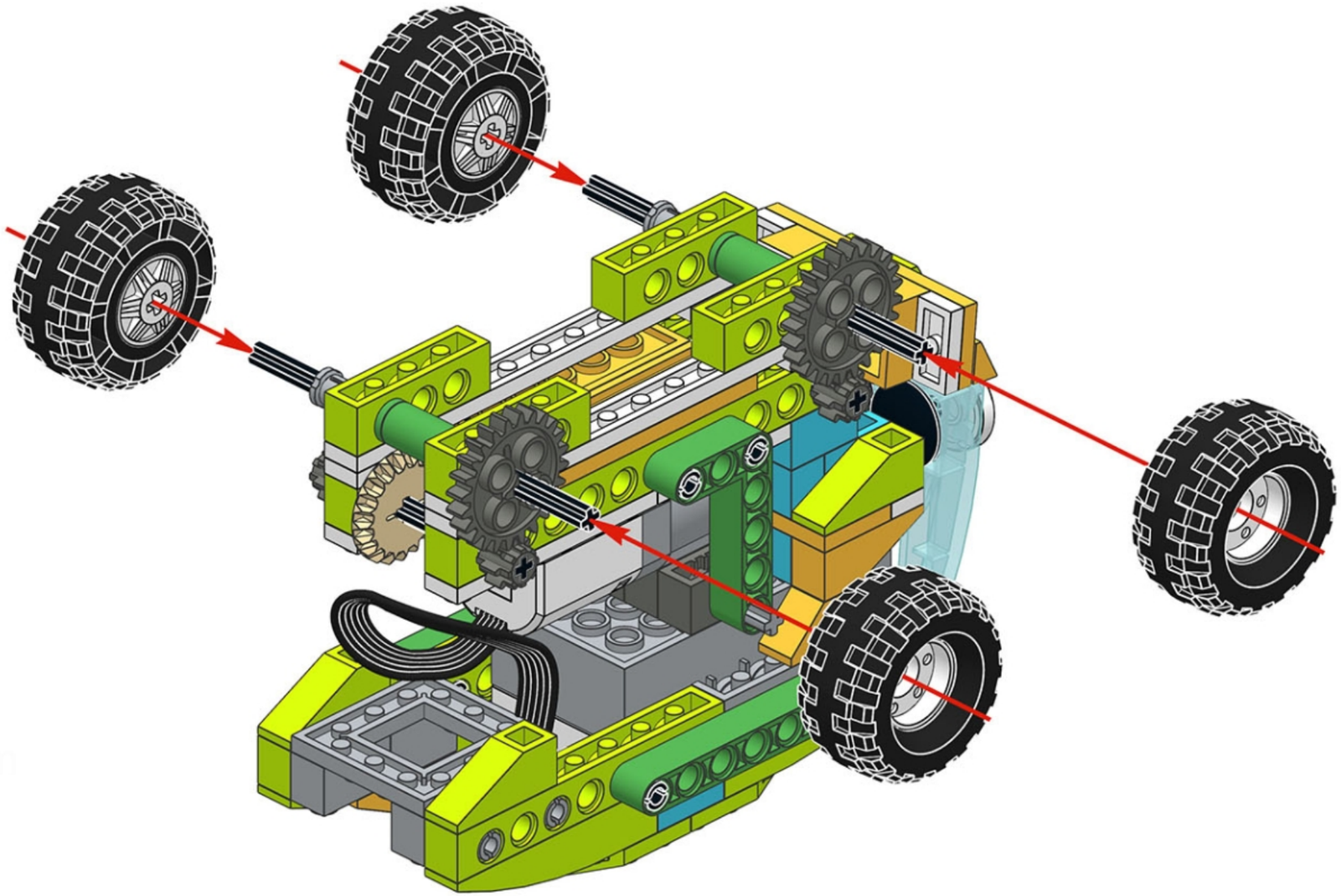

ROBORISE-IT!
ROBOTIC EDUCATION

ROBORISE-IT!
ROBOTIC EDUCATION

63

herfke@gmail.com

4/4

0

104

Hero

Hero

0

1

New day at the robots` factory

ROBORISE-IT!
ROBOTIC EDUCATION

Hello!
The town on the other side of the island has been suffered from tsunami. Infrastructure, port and airport are damaged, roads are destroyed. First of all we must to find the way to deliver the humanitarian aid to the town. There are not enough helicopters to do this. In our city there are trucks, but they are can't move without the roads. Our task is to figure out how to use available resources to help the victims.

0

3

TASK

ROBORISE-IT!
ROBOTIC EDUCATION

TASK

- to find a way to deliver the humanitarian aid

Steps

- to choose which transport is better suits for such task
- to test the chosen transport and define what must be improved
- to make the improvements and test the robot

0

4

Tsunami

ROBORISE-IT!
ROBOTIC EDUCATION

Tsunami is a series of waves in a water body caused by the displacement of a large volume of water. In the open sea them are not so big, but at the beach the wave become giant.

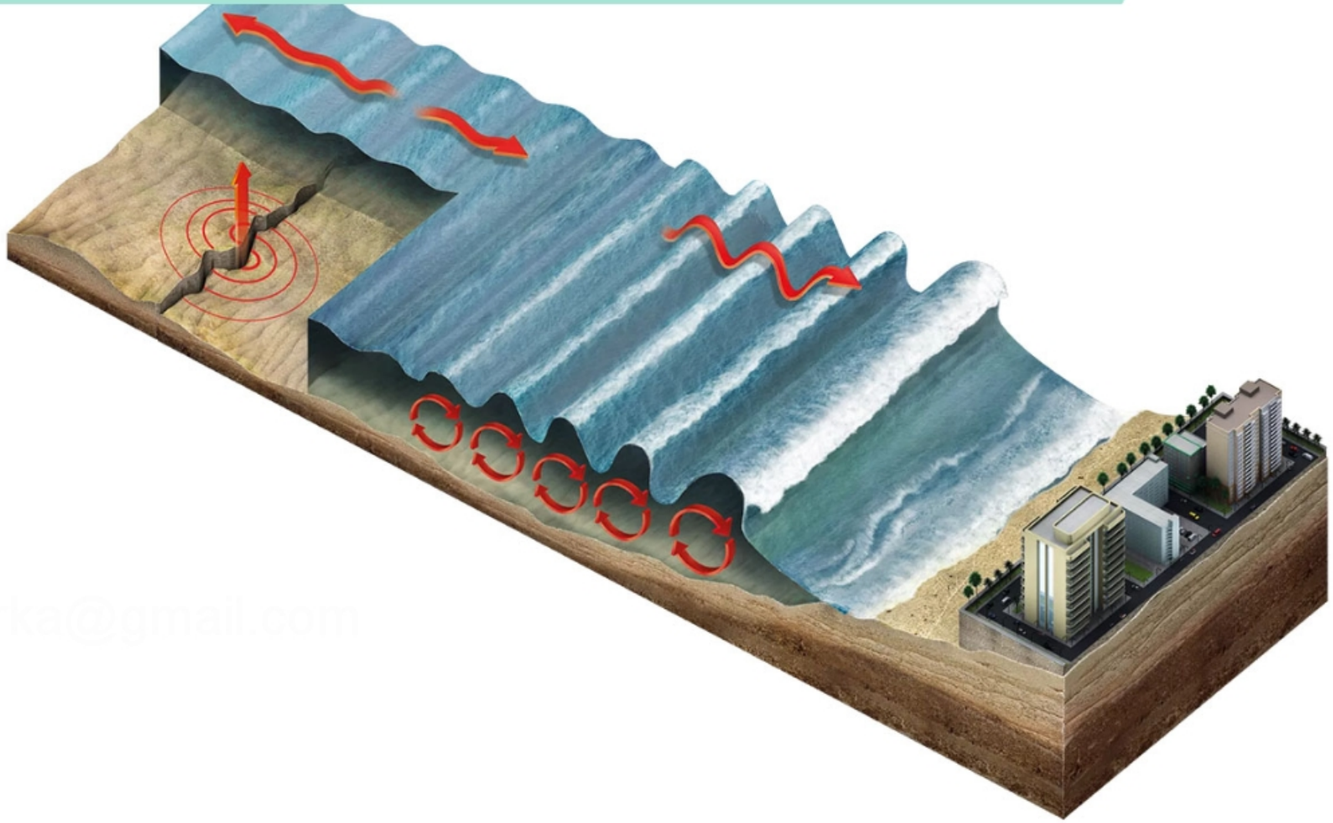

gorka@gmail.com

0

5

Tsunami

Earthquakes, volcanic eruptions and other underwater explosions, landslides, glacier calvings, meteorite impacts and other disturbances above or below water all have the potential to generate a tsunami.

ROBORISE-IT!
ROBOTIC EDUCATION

0

6

Tsunami

ROBORISE-IT!
ROBOTIC EDUCATION

Tsunamis lead to catastrophic destruction on land. All roads, bridges, any communication routes are destroyed.

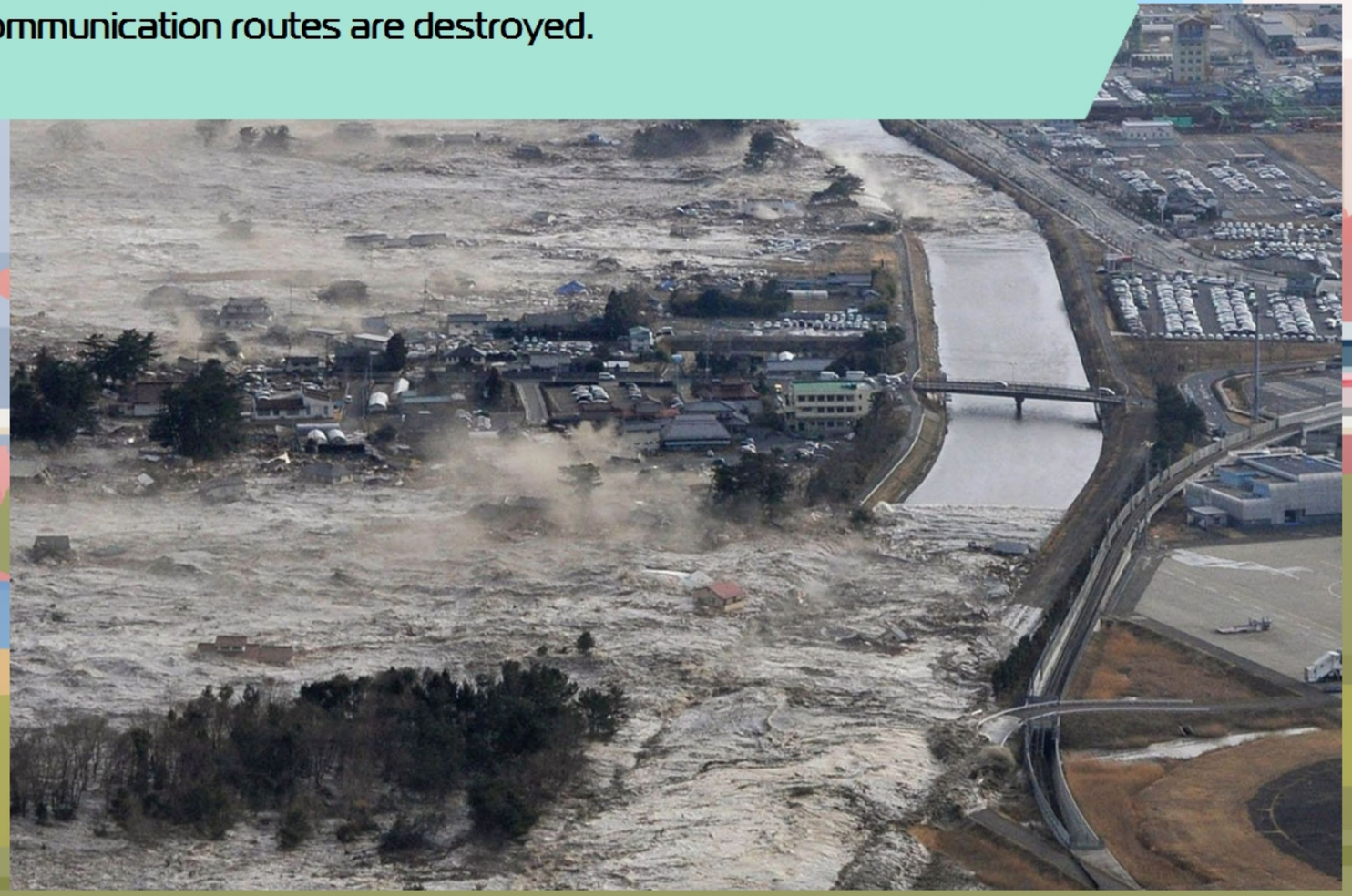

0

7

Tsunami

ROBORISE-IT!
ROBOTIC EDUCATION

To liquidate the consequences of the tsunami, huge forces and resources are being applied. This is not an easy task for any country. Therefore, many countries render assistance to victims.

0

8

Discussion of the task

How do you think, what vehicles is better for the delivery of huge cargos?

Trucks

ROBORISE-IT!
ROBOTIC EDUCATION

Usually for deliver a lot of cargo the trucks are used. But the most of them are designed for moving on the roads. We needs a special truck that can operates on the rough terrain.

0

10

Rough terrain trucks

ROBORISE-IT!
ROBOTIC EDUCATION

Such vehicles usually used by the military. But they haven't enough number of trucks. That's why we'll test the road truck and try to improve it for moving on the rough terrain.

0

11

Discuss!

How do you think, what is the main factors that makes the vehicle good for off-road?

Ultimate off-road vehicles

ROBORISE-IT!
ROBOTIC EDUCATION

The extreme off-road vehicles are creating for competing into one of the most famous annual rally raid The Dakar Rally. This is an off-road endurance event. Most of the special sections are off-road: dunes, mud, sands, rocks.

0

13

Discuss!

How to make the special off-road vehicle from the usual cargo truck?

VS

Rough-terrain vehicles

ROBORISE-IT!
ROBOTIC EDUCATION

Such vehicles usually has the some special features that makes them suitable for navigation without the roads. This is All-Wheel Drive, big-size Tires with low preassure, and big distance from the bottom of the vehicle to the ground.

0

15

Rough-terrain vehicles

ROBORISE-IT!
ROBOTIC EDUCATION

Also the suspension design is very important for the such vehicles.
The wheels must can move up and down for always touch the surface.

0

16

Truck's elements

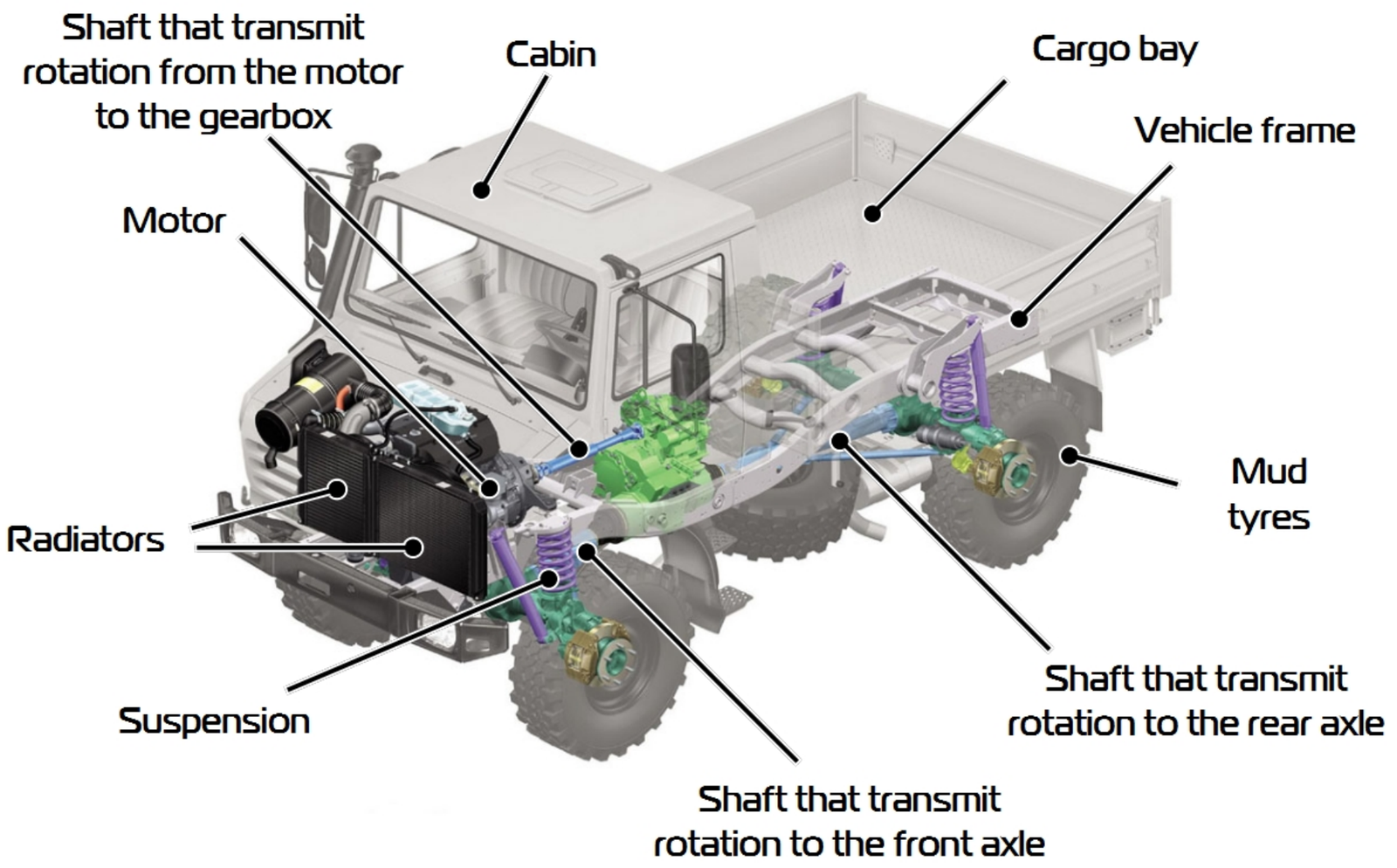

ROBORISE-IT!
ROBOTIC EDUCATION

0

17

Meet Hero!

ROBORISE-IT!
ROBOTIC EDUCATION

First we'll build trucks that we have, and then we'll improve them to increase the passability.

nerrka@gmail.com

0

18

Features

Only the motor and the SmartHub is used in the Hero design. They are located one above other for achieve good balance between the load on the front and the rear axle.

Find:

- smarthub
- motor

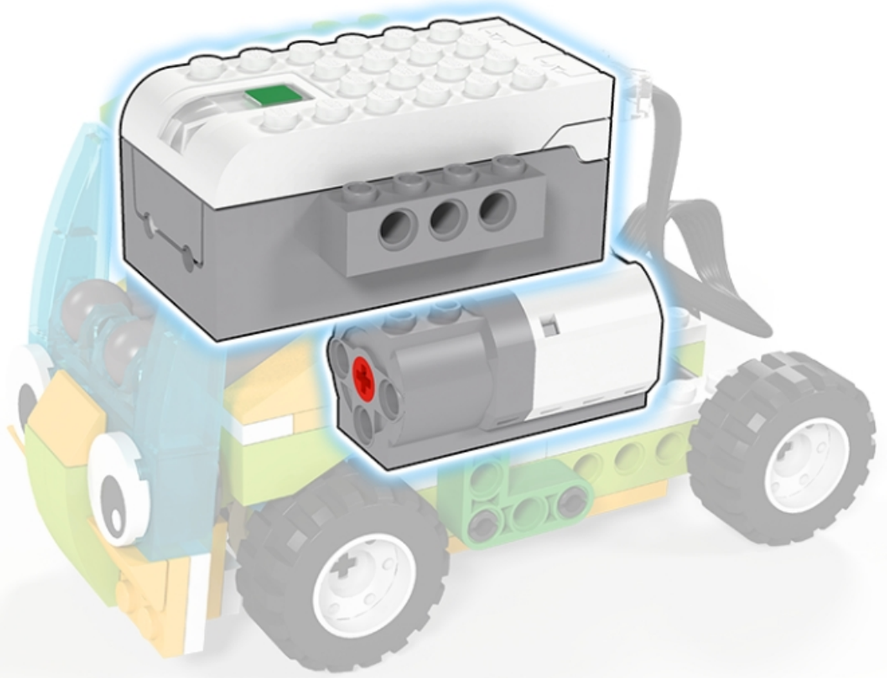

Features

By default Hero has only one the Drive axle. The second (rear) axle not connected.

ROBORISE-IT!
ROBOTIC EDUCATION

0

20

Build the robot!

ROBORISE-IT!
ROBOTIC EDUCATION

0

21

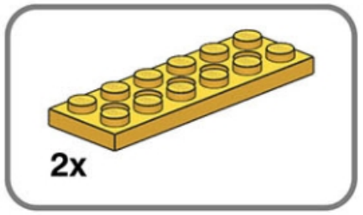

1

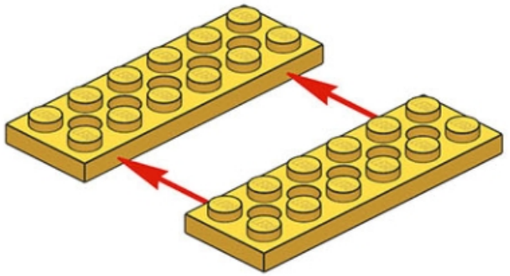

ROBORISE-IT!
ROBOTIC EDUCATION

renka@gmail.com

Check it out!

ROBORISE-IT!
ROBOTIC EDUCATION

Avoid any friction between the cables while robot is moving.

0

58

TASK

ROBORISE-IT!
ROBOTIC EDUCATION

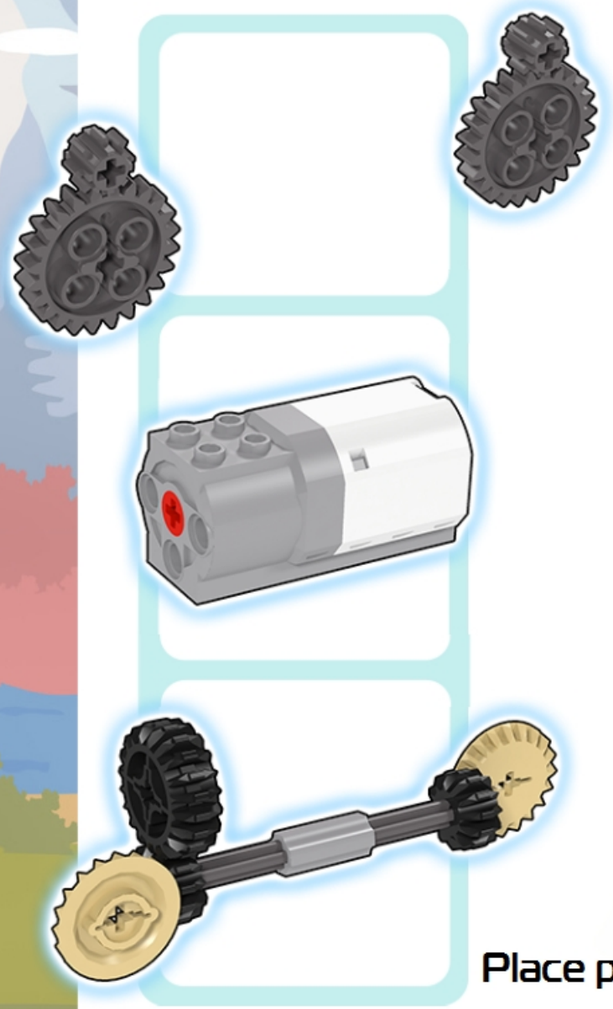

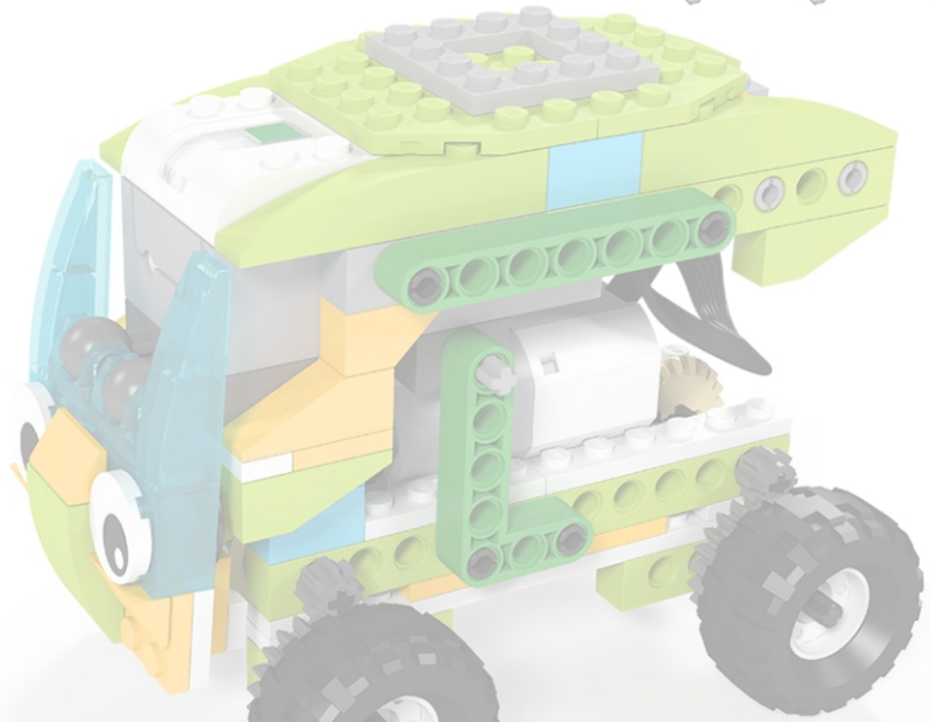

Place parts of the robot in the right places.

0

59

Task 1

ROBORISE-IT!
ROBOTIC EDUCATION

Test the passability of the Hero! Can it to overcome the hill?

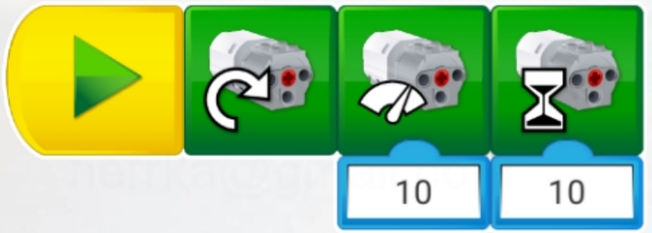

0

60

Discuss the result!

How to increase the passability of the robot?

nerka@gmail.com

Task 2

The adding of the Four-wheel drive will improve the passability of the robot. When one axle will lost the contact with the surface, the another one will push the car forward.

ROBORISE-IT!
ROBOTIC EDUCATION

0

62

nerka@gmail.com

ROBORISE-IT!
ROBOTIC EDUCATION

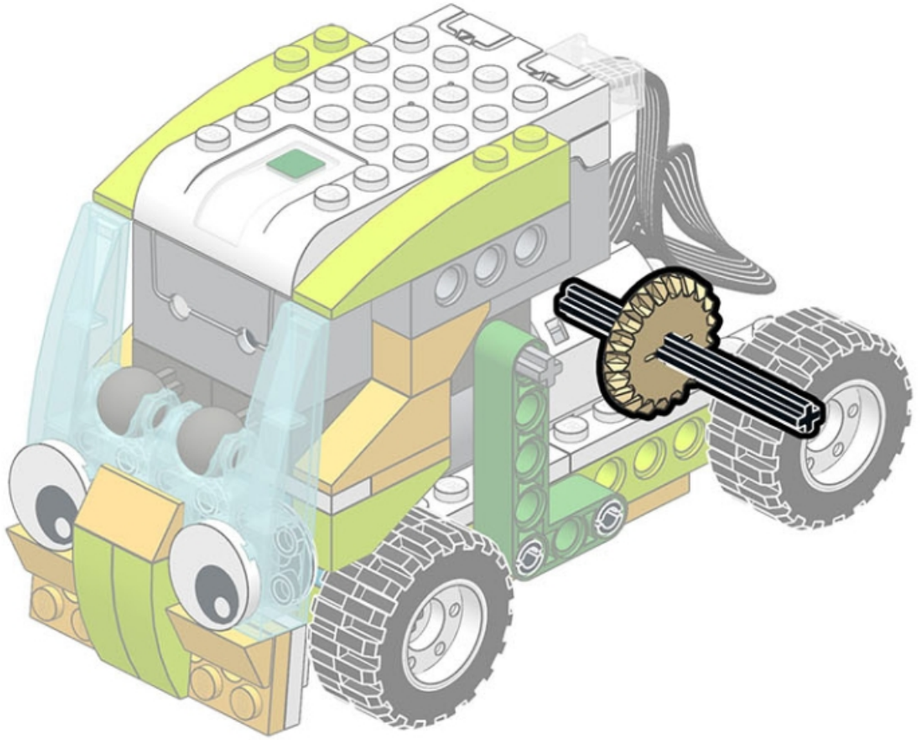

1/5

0

63

Task 3

ROBORISE-IT!
ROBOTIC EDUCATION

Repeat the testing!

0

68

Task 4

ROBORISE-IT!
ROBOTIC EDUCATION

Test your robot at the top of the ramp.

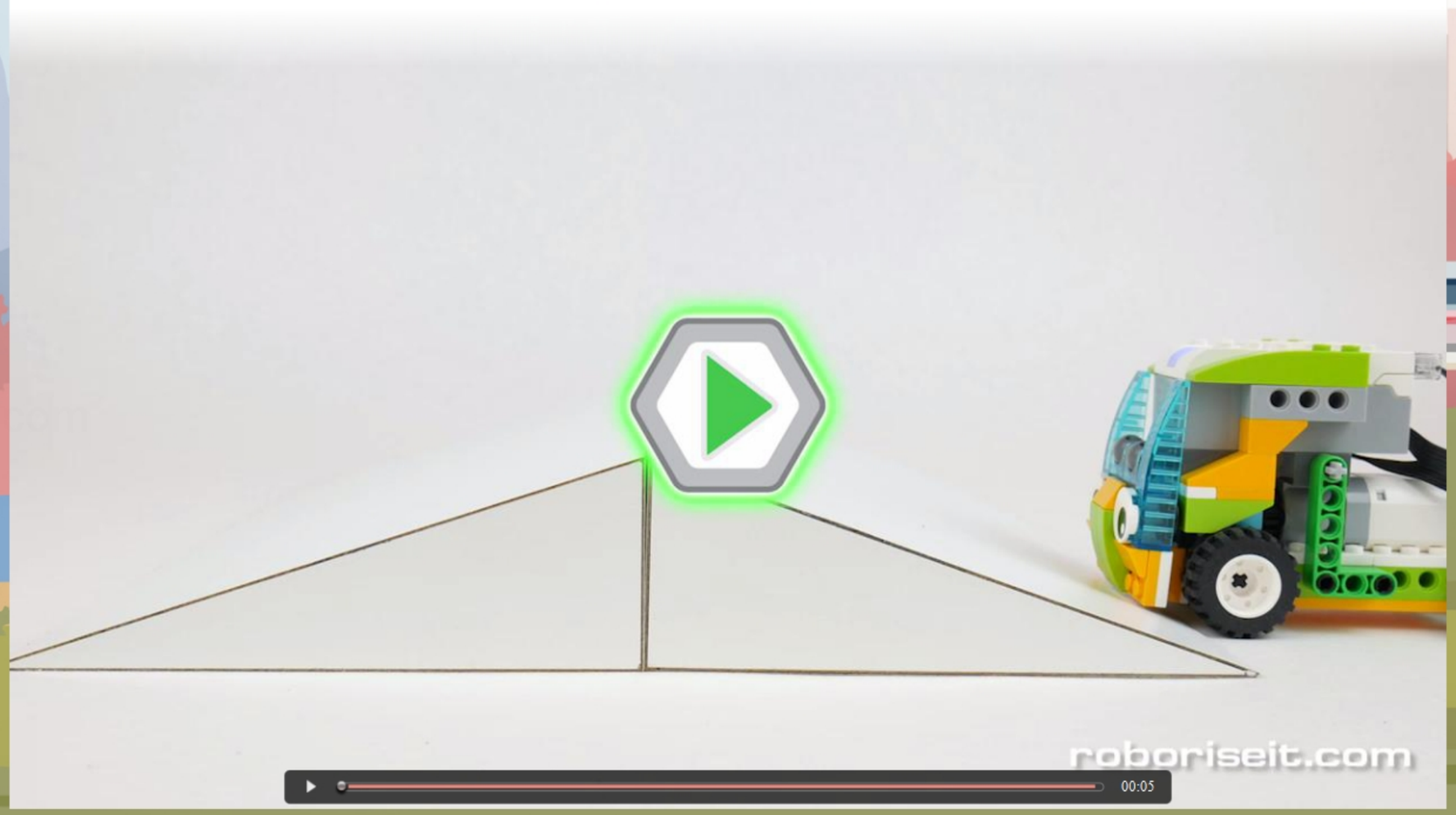

0

69

Discuss the result!

How to prevent stucking of the robot at the top of the ramp?

ROBORISE-IT!
ROBOTIC EDUCATION

The Ground Clearance

ROBORISE-IT!
ROBOTIC EDUCATION

The ground clearance is the distance from the ground to the car's bottom.

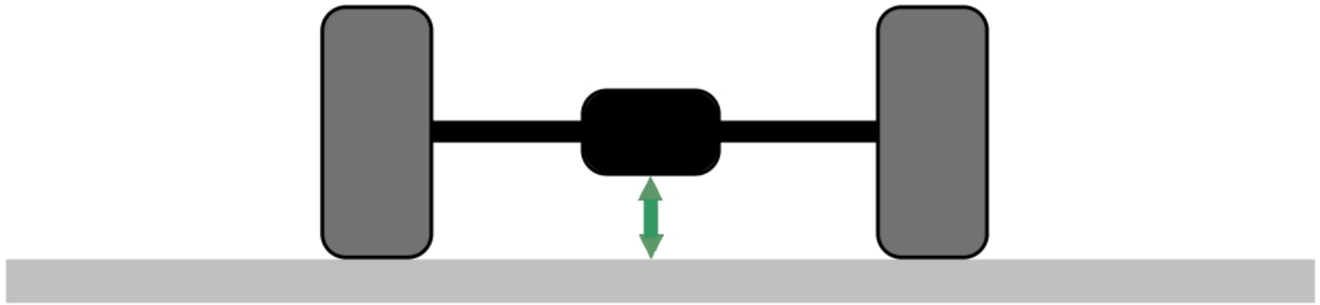

Clearance

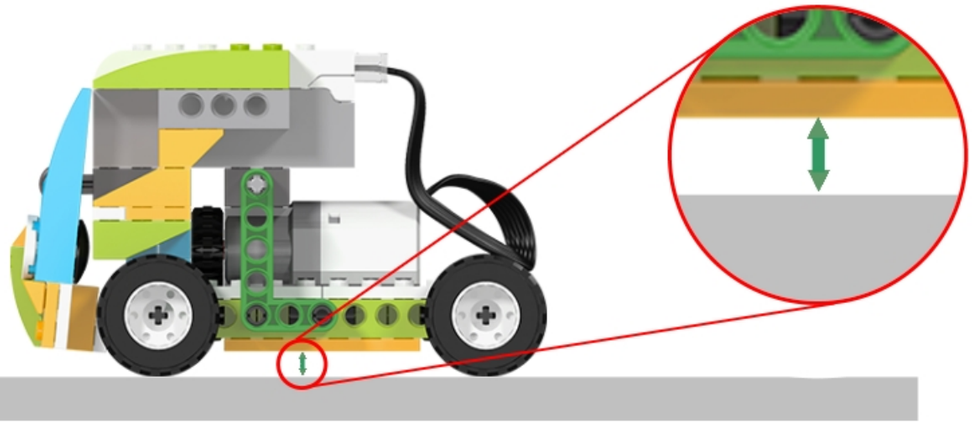

The Ground Clearance

ROBORISE-IT!
ROBOTIC EDUCATION

The higher clearance is increased the passability of the car.

The clearance may be increased by using the bigger wheels or by using the portal axle.

Normal axle

Portal axle

Compare Clearances!

0

72

The Ground Clearance

ROBORISE-IT!
ROBOTIC EDUCATION

Compare Clearances with big and regular wheels!

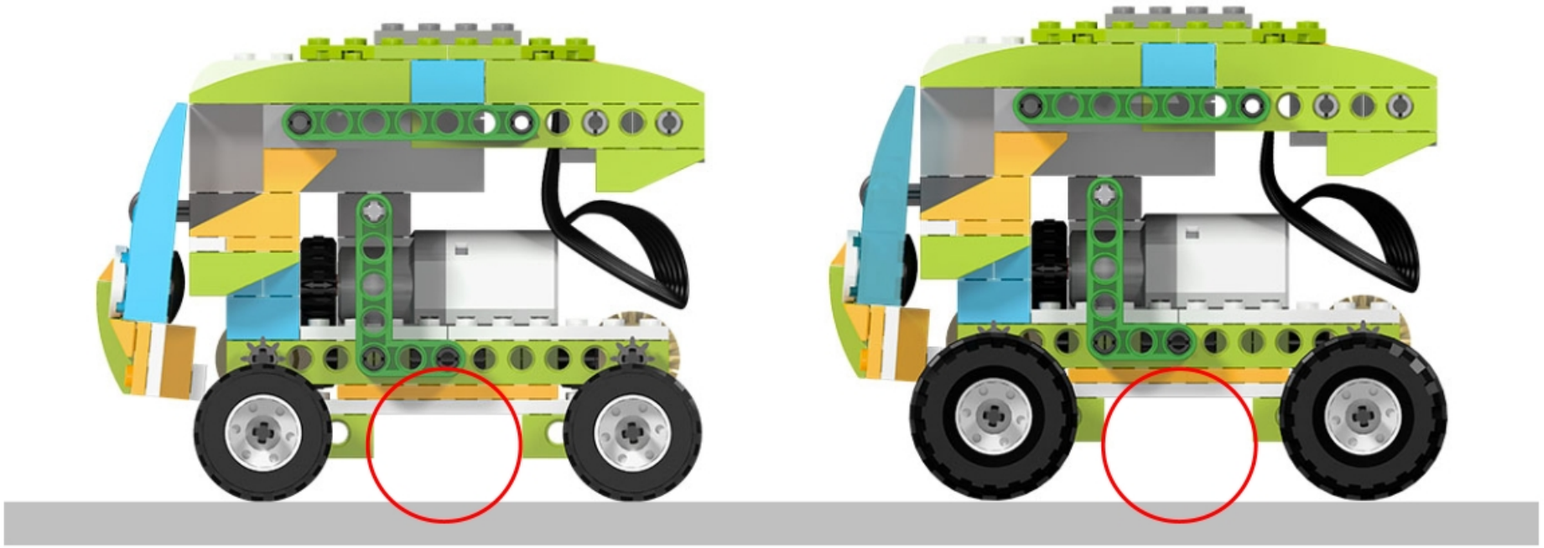

Regular wheels

Big wheels

0

73

Features

ROBORISE-IT!
ROBOTIC EDUCATION

At the first step the rotation is transmitted to the front and rear axles. After that it transmitted by portal gears. They are used for increasing of ground clearance.

Find:

- Motor
- Transmission
- Portal gears

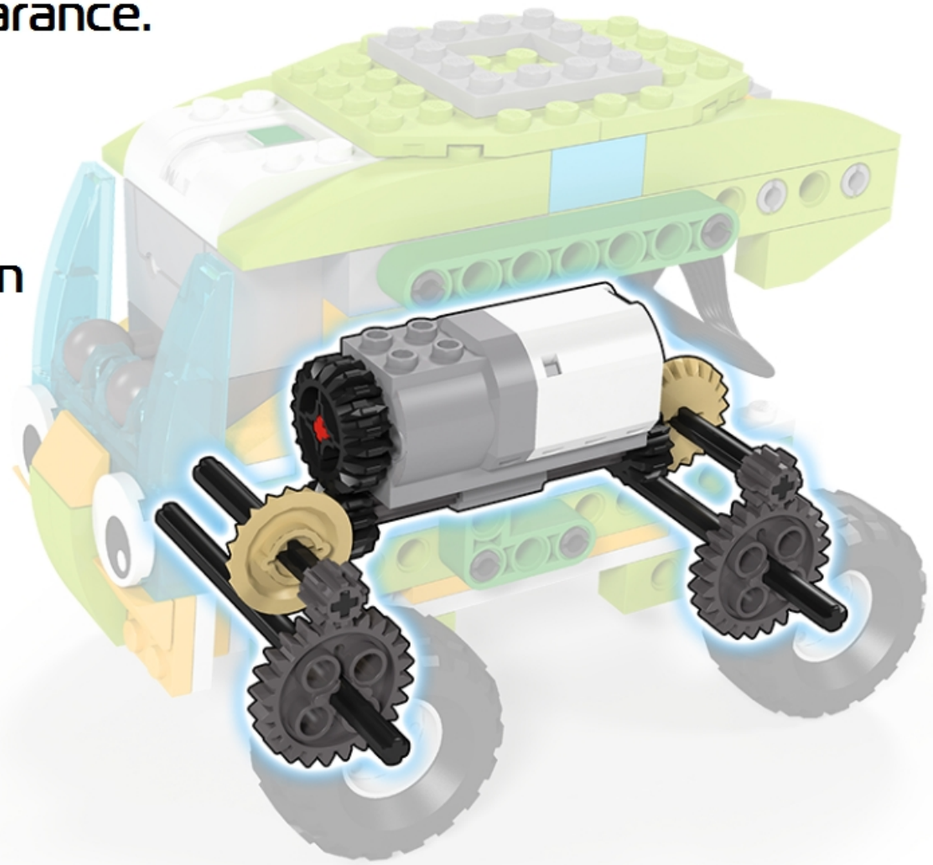

Task 5

ROBORISE-IT!
ROBOTIC EDUCATION

Add the portal axle to design of your robot!

0

75

ROBORISE-IT!
ROBOTIC EDUCATION

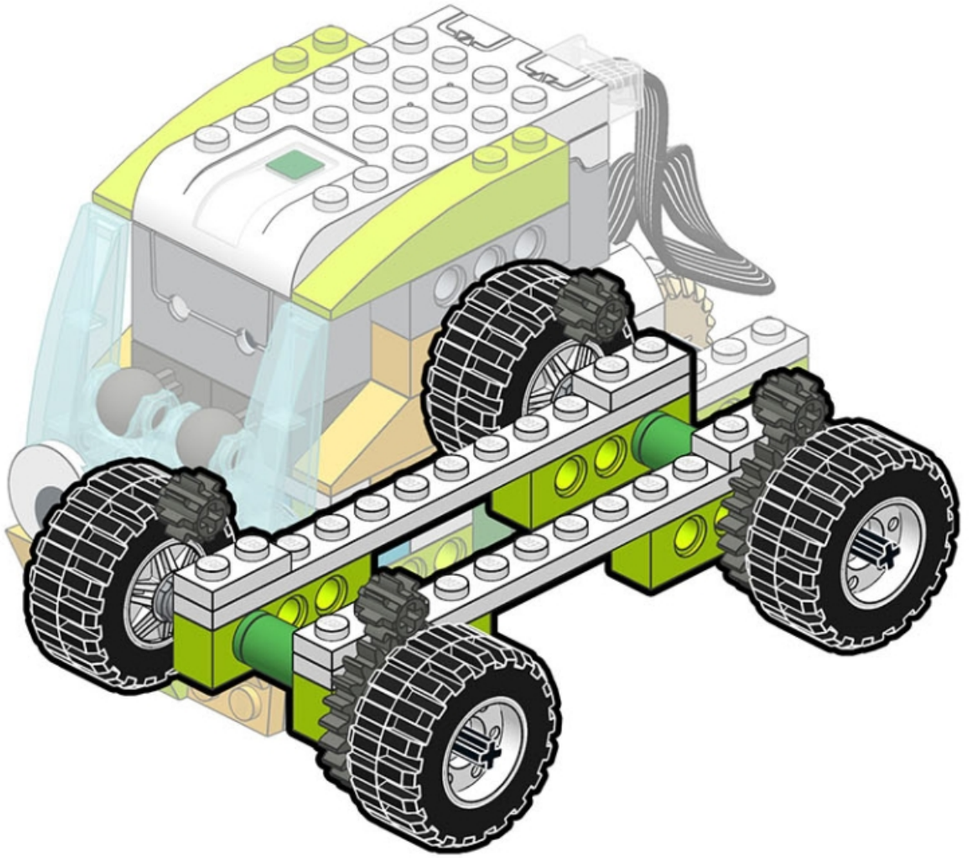

1/10

0

76

Task 6

ROBORISE-IT!
ROBOTIC EDUCATION

Repeat the testing! Why you was need to change the direction of the motor's rotation?

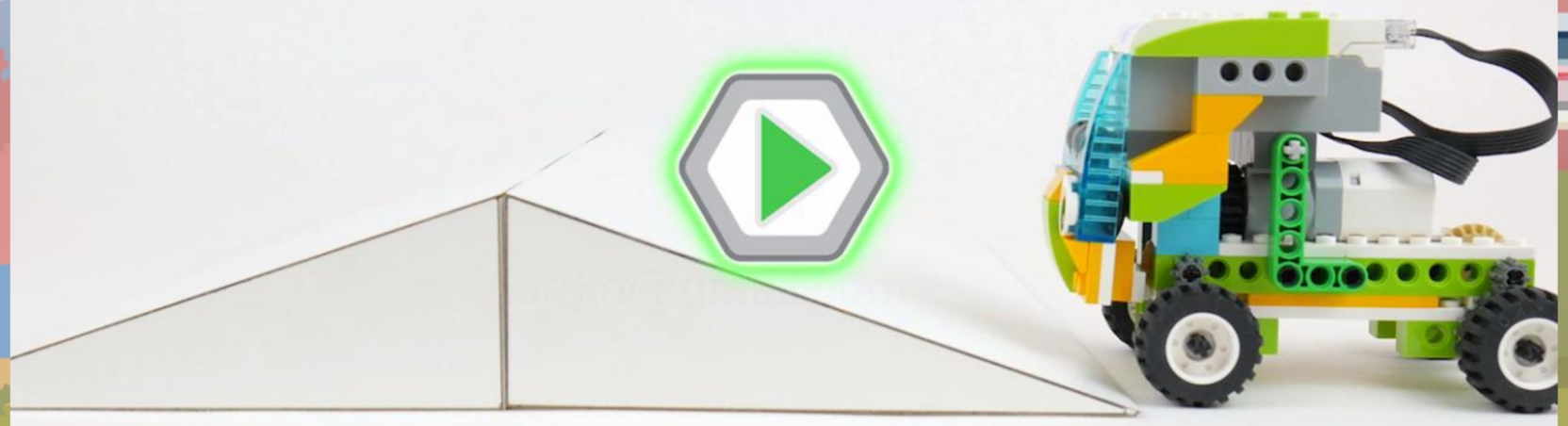

0

86

Enhanced version

ROBORISE-IT!
ROBOTIC EDUCATION

Add the cargo bay to the robot!

0

87

ROBORISE-IT!
ROBOTIC EDUCATION

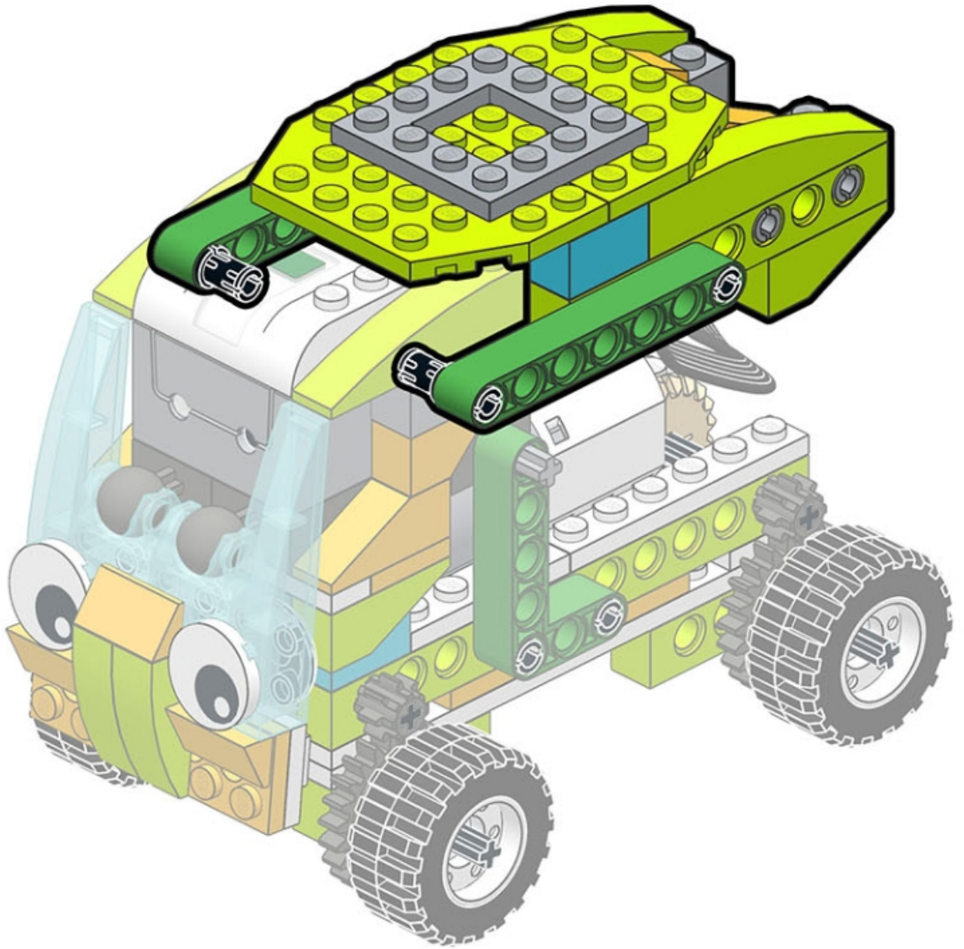

1/12

0

88

Task 7*

ROBORISE-IT!
ROBOTIC EDUCATION

Let's collaborate with one more team and test the robot with biggest wheels!

0

100

ROBORISE-IT!
ROBOTIC EDUCATION

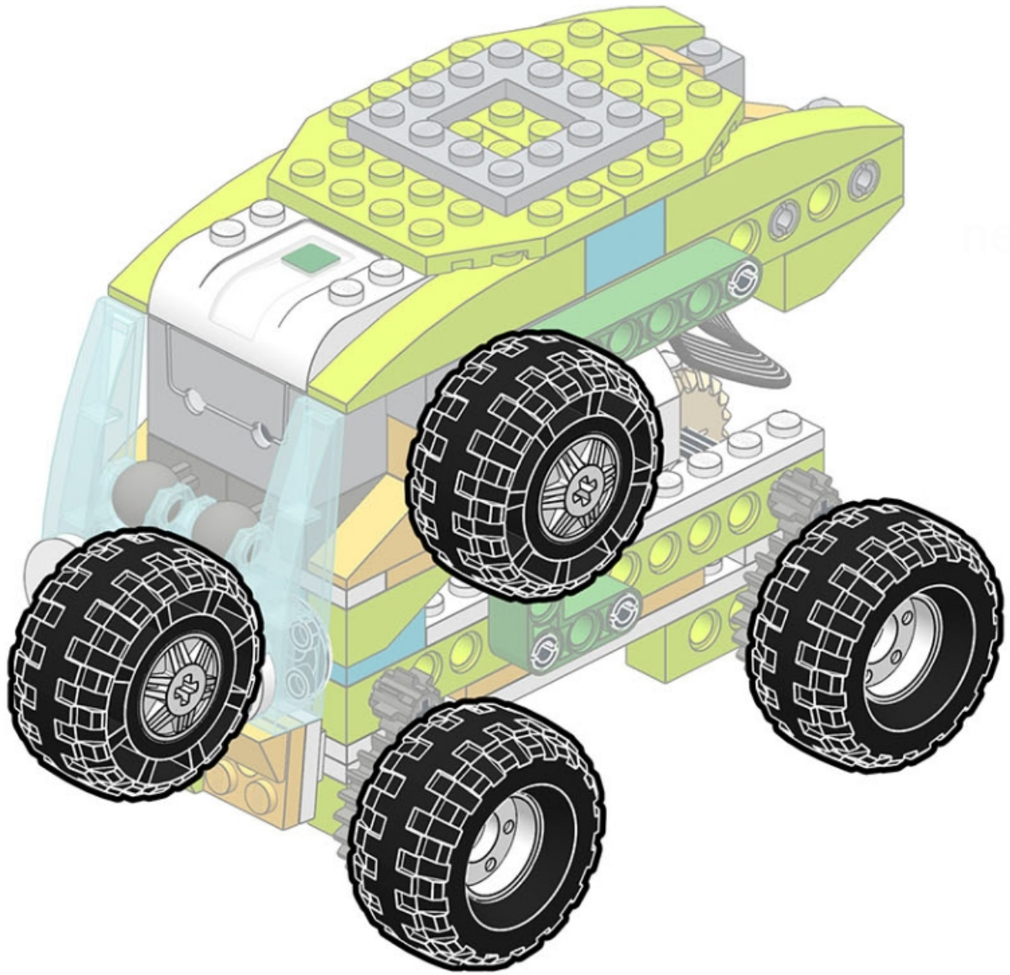

1/4

0

101

Congratulations!

ROBORISE-IT!
ROBOTIC EDUCATION

The created robots will help to deliver the humanitarian aid to the town!

0

105

Discuss!

- Why All Wheel Drive increases the passability of the car?
- What is the ground clearance?
- How to increase the clearance?

Your achievements

ROBORISE-IT!
ROBOTIC EDUCATION

Total count: 0

1

2

3

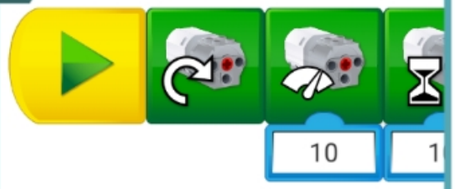

4

0

107

Mission complete!

ROBORISE-IT!
ROBOTIC EDUCATION

0

108