ESP32-P4

ESPRESSIF

High-performance MCU with RISC-V single-core and dual-core microprocessors
Powerful image and voice processing capability 16 MB or 32 MB PSRAM in the chip's package
55 GPIOs, rich set of peripherals QFN104 (10×10 mm) Package

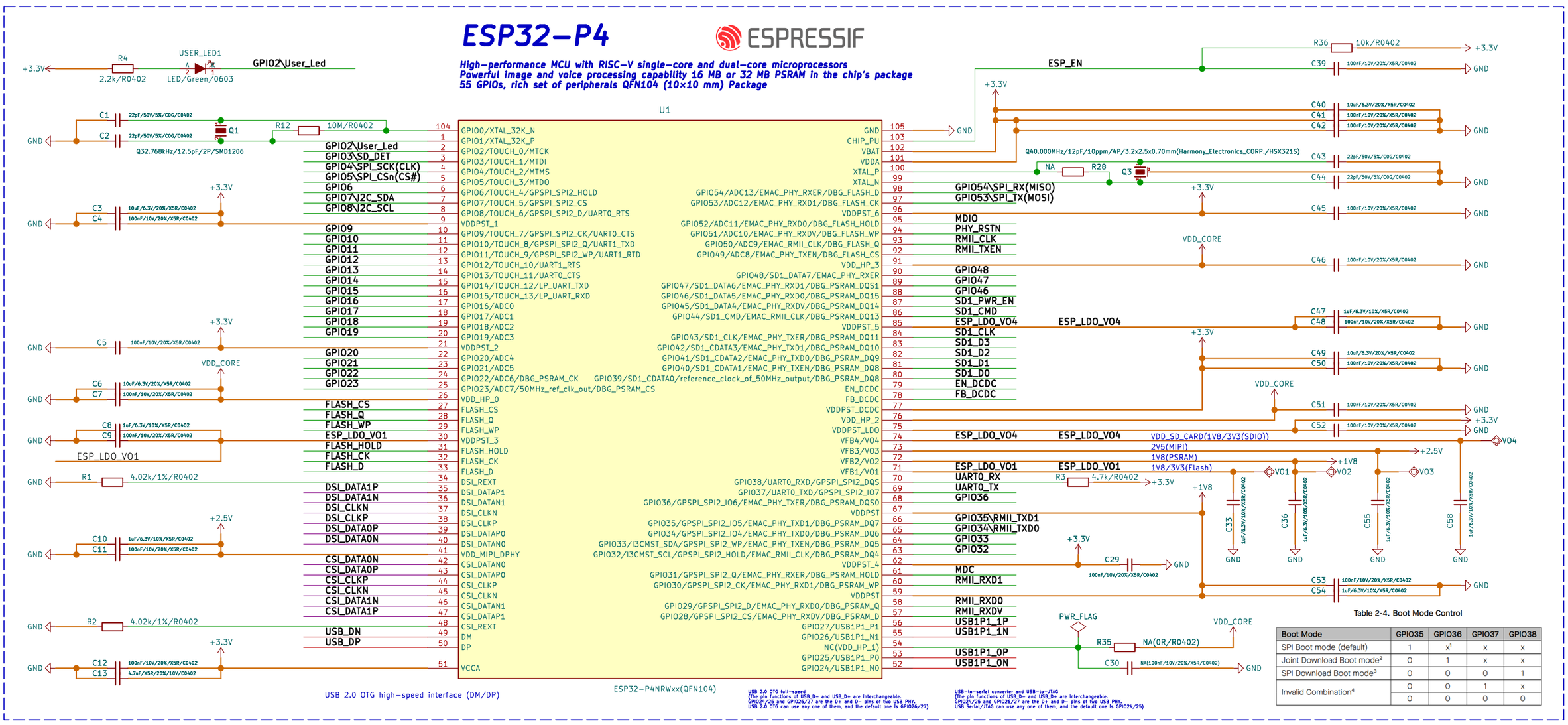

Table 2-4. Boot Mode Control

Boot Mode	GPIO35	GPIO36	GPIO37	GPIO38
SPI Boot mode (default)	1	x[1]	x	x
Joint Download Boot mode[2]	0	1	x	x
SPI Download Boot mode[3]	0	0	0	1
Invalid Combination[4]	0	0	1	x
	0	0	0	0

PoE RJ45 Connector

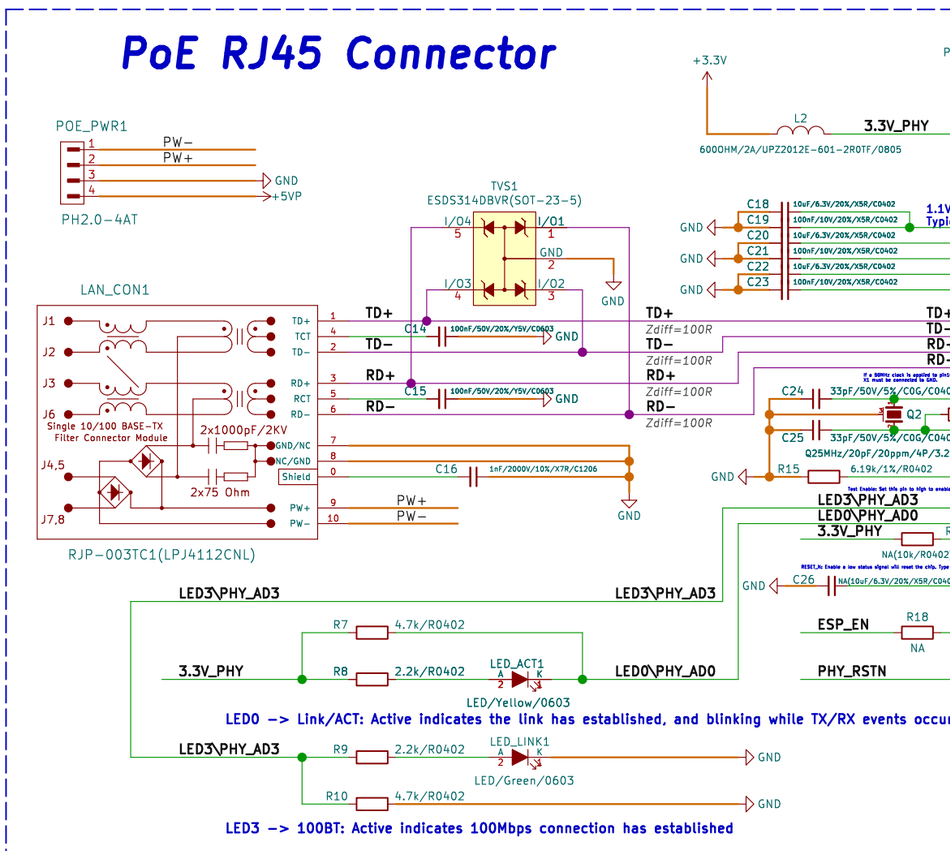

Single Port 10/100 MII/RMII/TP/Fiber Fast Ethernet Transceiver

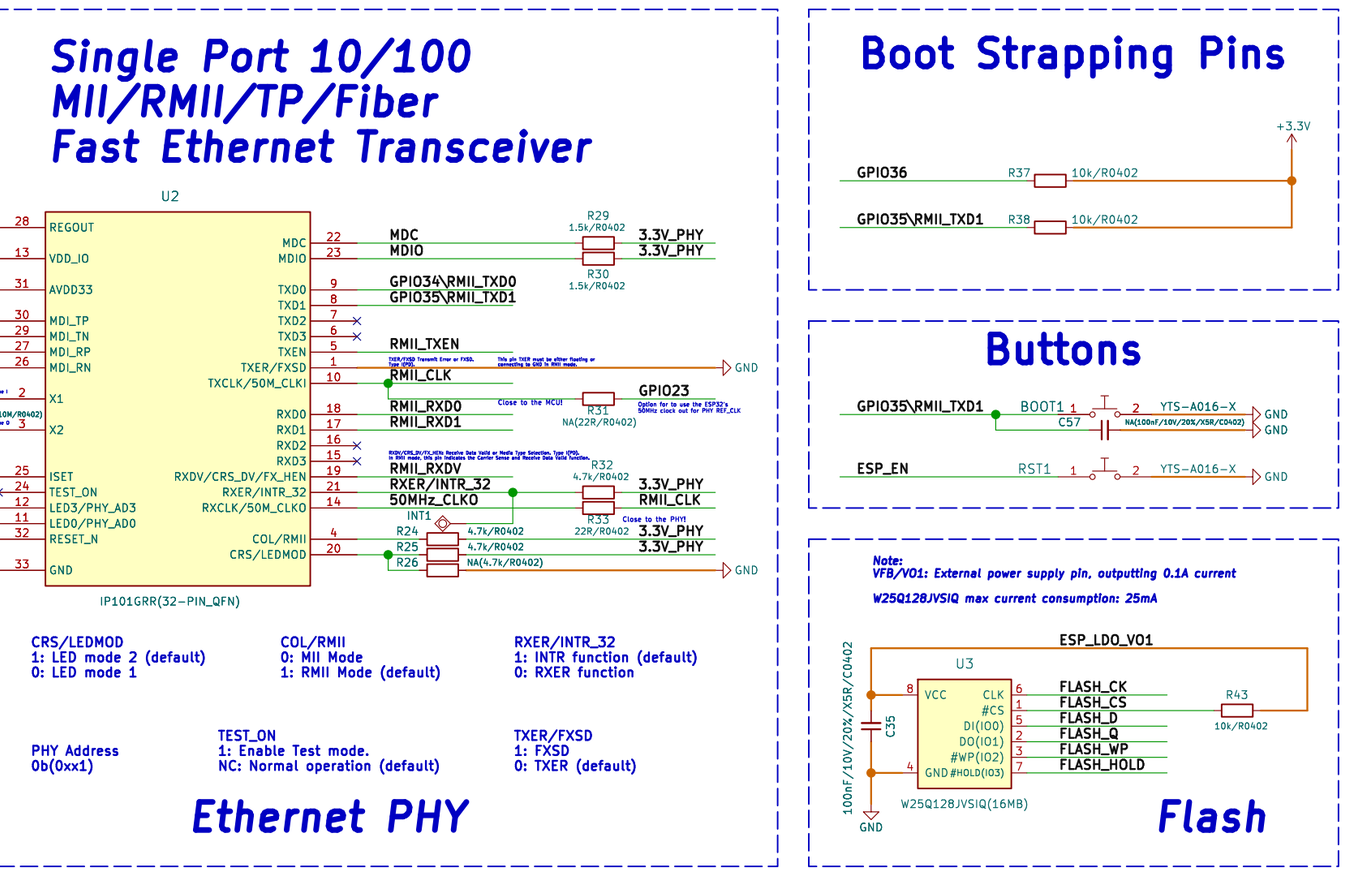

Boot Strapping Pins

SD/MMC Card

Note:
VFB/VO4: External power supply pin, outputting 0.2A current.

The power consumption of microSD cards varies by manufacturer, but appears to be in the range of 66-330 mW (20-100 mA at a supply voltage of 3.3 V). Specifications from TwinMos technologies list a maximum of 149 mW (45 mA) during transfer.

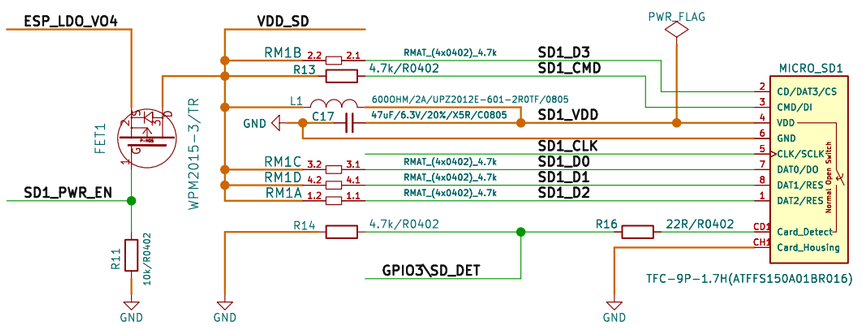

UEXT

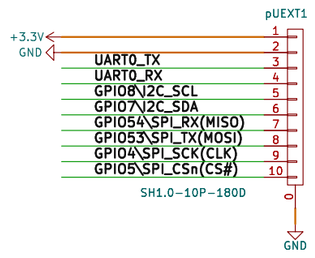

MIPI-CSI Camera & MIPI-DSI LCD

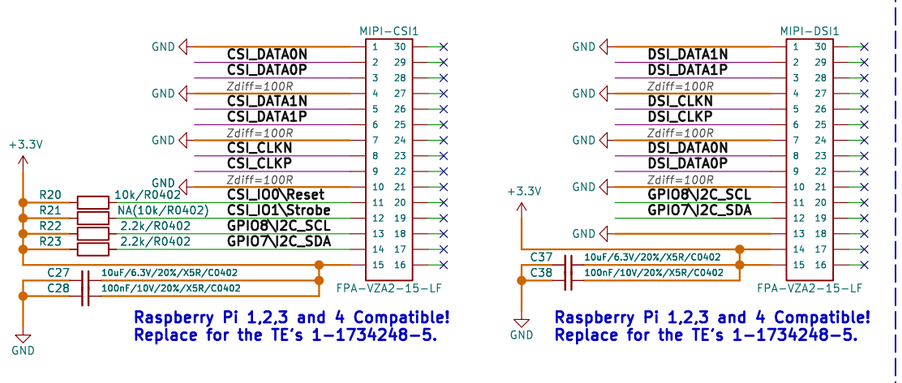

USB-Serial/JTAG

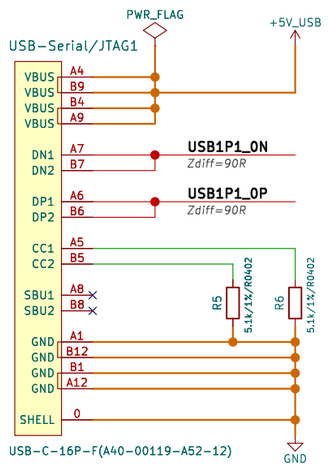

Extensions

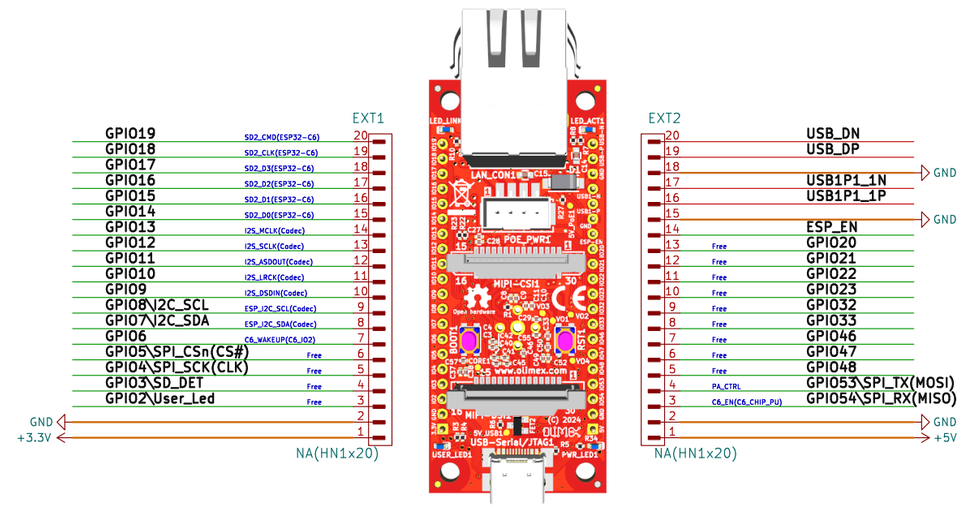

Power Supply

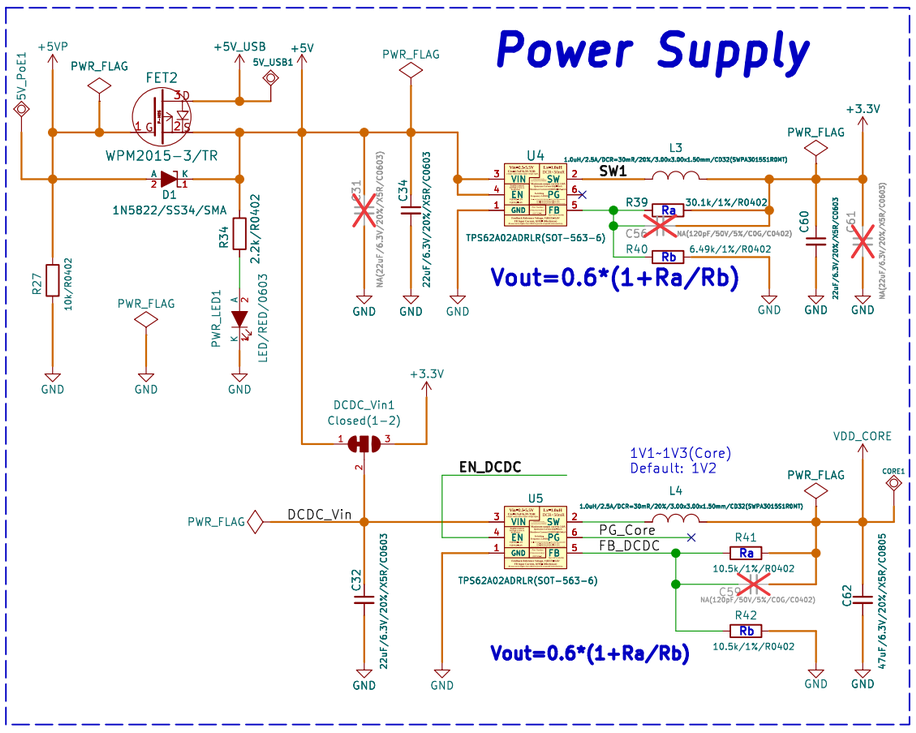

Mounting Holes

Fiducials

OLIMEX
https://www.olimex.com/
OLIMEX LTD.
open source hardware

Sheet: /
File: ESP32-P4-DevKit_Rev_B.kicad_sch

Title: ESP32-P4-DevKit

Size: A2	Date: 2024-11-18	Rev: B
KiCad E.D.A. kicad 7.0.9-7.0.9~ubuntu22.04.1		Id: 1/1