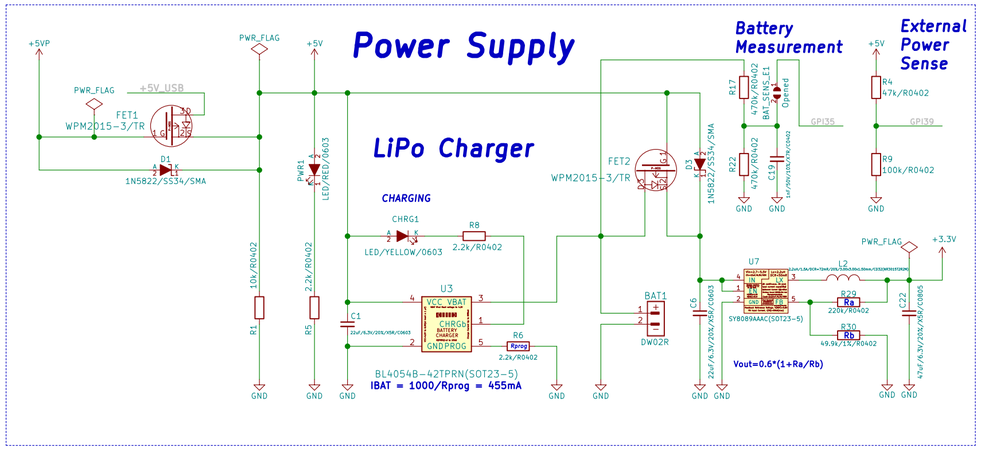

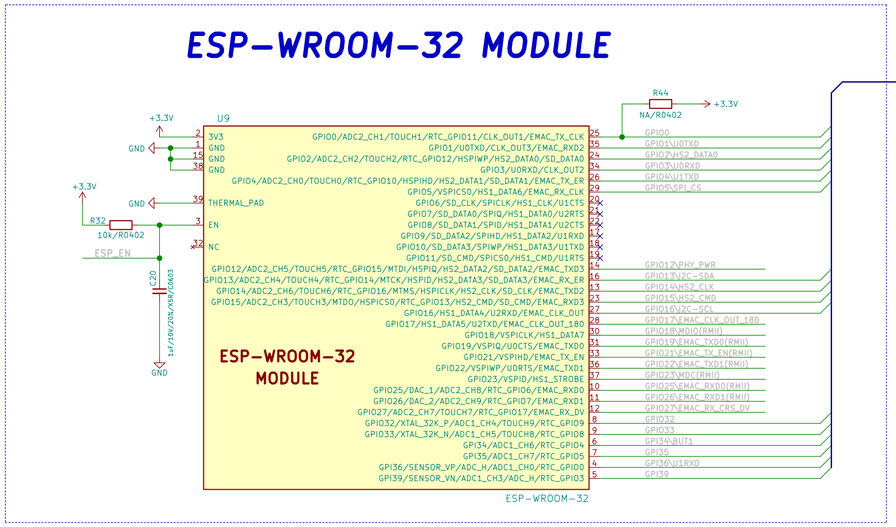

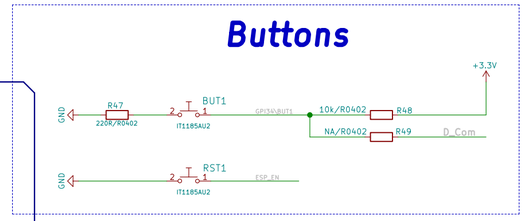

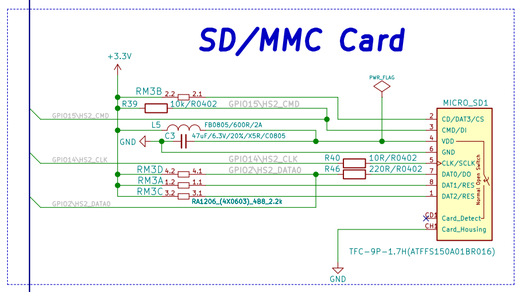

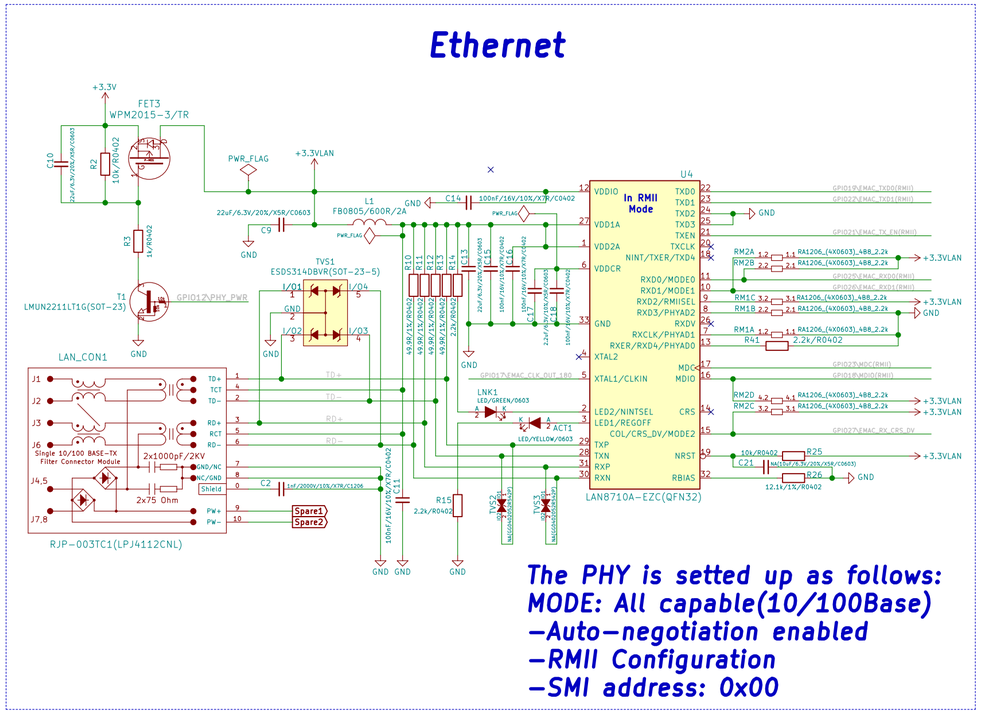

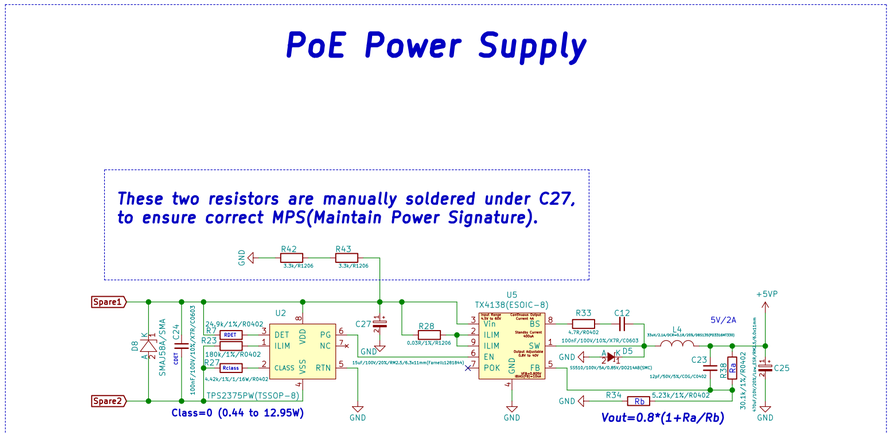

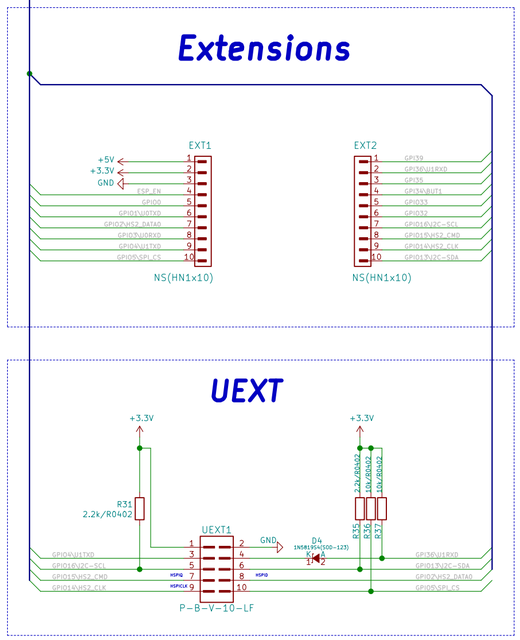

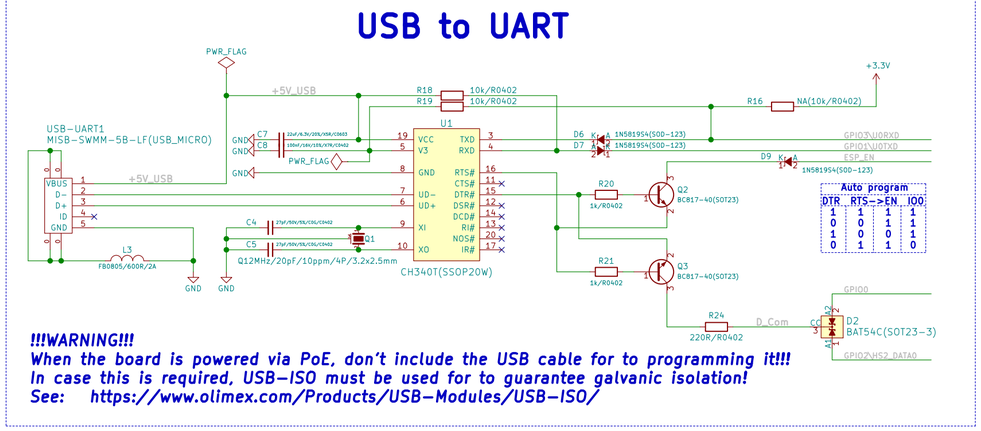

Notes:

Software Selectable Pins

Interface	Signal	Pin
EMAC	EMAC_MDC_out EMAC_MDI_in EMAC_MDO_out EMAC_CRS_out EMAC_COL_out	Any GPIO
I2C	I2CEXT0_SCL_in I2CEXT0_SDA_in I2CEXT1_SCL_in I2CEXT1_SDA_in I2CEXT0_SCL_out I2CEXT0_SDA_out I2CEXT1_SCL_out I2CEXT1_SDA_out	Any GPIO
General Purpose SPI	HSPIQ_in/_out HSPID_in/_out HSPICLK_in/_out HSPI_CS0_in/_out HSPI_CS1_out HSPI_CS2_out VSPIQ_in/_out VSPID_in/_out VSPICLK_in/_out VSPI_CS0_in/_out VSPI_CS1_out VSPI_CS2_out	Any GPIO

For more information refer to esp_wroom_32_datasheet_en.pdf.

Internal Bootstrapping Resistors

MTDI/GPIO12:	Pull-Down
GPIO0:	Pull-Up
GPIO2:	Pull-Down
GPIO4:	Pull-Down
MTDO/GPIO15:	Pull-Up
GPIO5:	Pull-Up

Bootstrapping Pins Settings

Pin	Default		
Voltage of Internal LDO(VDD_SDIO)			
GPIO12/MTDI	Default: Pull-Down	3.3V: 0	1.8V: 1
Booting Mode			
GPIO0	Pull-Up	1	0
GPIO2	Pull-Down	Don't-care	0
Debugging Log on U0TXD During Booting			
GPIO15/MTDO	Default: Pull-Up	U0TXD Toggling: 1	U0TXD Silent: 0
Timing of SDIO Slave			
GPIO15/MTDO	Default: Pull-Up	Falling-edge:Output: 0	Falling-edge:Input: 0 Rising-edge:Output: 1
GPIO5	Default: Pull-Up	Falling-edge:Output: 0	Falling-edge:Input: 1 Rising-edge:Output: 1
			Rising-edge:Input: 1

Fiducials

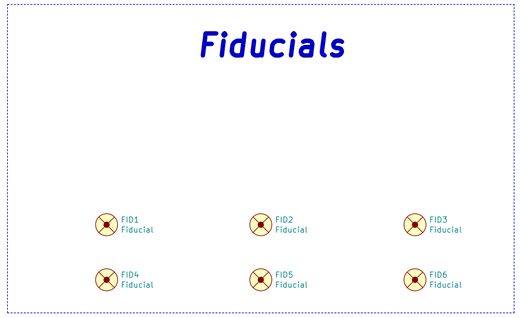

OLIMEX
https://www.olimex.com
OLIMEX LTD.
open source hardware

Sheet: /
File: ESP32-PoE_Rev_G1.sch

Title: ESP32-PoE

Size: A2	Date: 2021-09-22	Rev: G1
KiCad E.D.A. kicad 5.1.0-rc2-unknown-036be7d80ubuntu16.04.1		Id: 1/1