灵心巧手
LINKERBOT

product manuals



Left Hand L30 (Standard Edition)

Lingxin Qiaoshou (Beijing) Technology Co., Ltd.

Version Revision History

Version number	Date of Change	Change Description
v1.0	2025.08.2	Editio princeps
v1.1	2025.08.20	Linker Hand L30 Product Manual – First Edition
v1.2	2025.08.29	Revised Content
V1.3	2025.10.27	Edit product images

Catalogue

1 product presentation.....1

1.1 product function.....3

1.2 External dimensions.....4

1.3 Number of Degrees of Freedom and Range of Motion.....4

1.4 Product Parameter.....7

1.5 Sensor System.....7

2. Installation and Commissioning.....8

2.1 Accessory List.....8

2.2 installation instructions.....9

2.3 Software Debugging Introduction.....11

3 After-Sales and Service Information.....13

1 Product Presentation

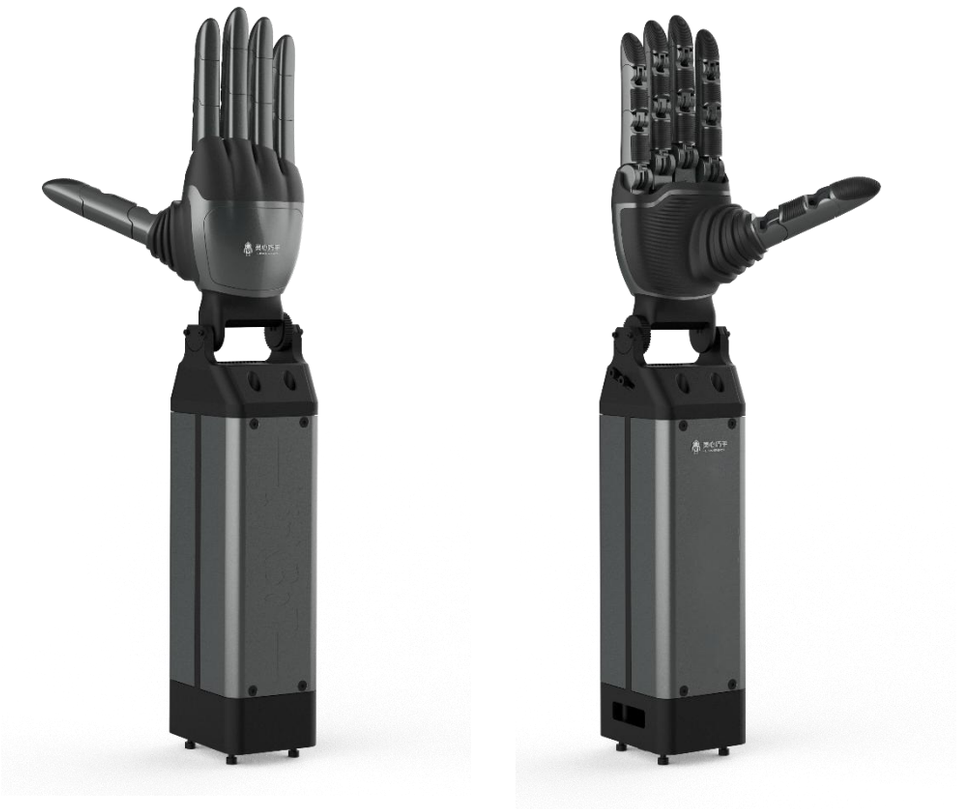

Product Exterior Render

The Linker Hand L30 is a new-generation modular humanoid manipulator introduced by Lingxin Qiaoshou. As a representative product in the field of tendon-driven robotic end-effectors, its technology and performance reflect the latest R&D achievements in this domain, embodying the team's core expertise in motion control, bionic design, and mechatronic integration.

This robotic gripper is designed with the core objective of "recreating the fine motor skills of the human hand," deeply integrating bionic principles with advanced mechatronics technology: it utilizes the movement logic of the human hand to construct a multi-degree-of-freedom bionic structure, while simultaneously incorporating high-precision control and real-time sensing capabilities to achieve an efficient integration of "flexible motion" and "precise operation." In terms of key performance metrics, its motion flexibility enables complex actions such as pinching, gripping, and twisting; its operational precision remains stable at the millimeter level; and its system reliability has been validated under rigorous operating conditions. All three core performance indicators—motion flexibility, operational precision, and system reliability—are at industry-leading levels, enabling the solution to provide highly adaptable robotic end-effector solutions for fields such as industrial automation, medical assistance, and scientific research and experimentation.

The specific characteristics of this product are introduced as follows.

1) Bionic Drive Architecture

The system employs a tendon-driven transmission mechanism (comprising an ultra-high molecular weight polyethylene tendon and a polytetrafluoroethylene tube), utilizing a distal motor assembly to achieve precise actuation, enabling collaborative control of 5 fingers with 17 degrees of freedom and 21 joints (including 1 wrist degree of freedom). The product features a compact humanoid design tailored to adult palm dimensions; while ensuring the human-like motion capabilities of a single finger with 3 degrees of freedom, it significantly enhances spatial utilization efficiency and can accurately replicate the core characteristics of coordinated multi-joint movements of the human hand.

2) High-precision force control capability

By integrating a high-resolution encoder with a tendon-tension control algorithm and utilizing an adaptive PID algorithm for real-time dynamic adjustment, this system achieves a repeatability positioning accuracy of ±0.20 mm and is capable of reliably performing precision tasks—such as screw tightening and thin sheet picking—that require extremely stringent accuracy specifications.

3) Load and Adaptability

The device employs a palm-opposing thumb configuration combined with an independent force-control system for each of the four fingers, enabling it to deliver up to 10 N of precise gripping force. Equipped with a built-in high-sensitivity tactile sensing array at the fingertips, it features object detection capabilities, allowing it to autonomously adapt to the stable grasping requirements of various irregular objects without any manual intervention.

4) Fast response performance

The device exhibits outstanding motion response performance, with core movements such as four-finger flexion and thumb-side swaying achieving speeds of over 400°/s, while the hand opening and closing time is only 0.2s. This characteristic enables it to efficiently adapt to high-speed operational scenarios, such as industrial assembly lines, thereby significantly enhancing overall operational efficiency.

5) Convenient Control and Integration

Equipped with both a Mini-USB and CAN FD dual communication interfaces, it supports a communication frequency of 500 Hz and enables seamless integration with industrial automation equipment and service robot platforms. It not only facilitates rapid integration with various control systems but also delivers millisecond-level real-time control response, ensuring the real-time and precise execution of commands; this fully meets the high-precision operational requirements across diverse scenarios while guaranteeing control reliability and timeliness even under complex operating conditions.

1.1 Product Function

1.1.1 Position Control

It enables precise control over the spatial position of the entire hand and its individual finger joints, allowing for the smooth execution of preset trajectory-based movements; this ensures operational accuracy—from overall motion to fine adjustments at individual joints—thereby meeting the stringent positional accuracy requirements of applications such as precision assembly and path-guided operations.

1.1.2 Speed Control

The system allows for flexible adjustment of finger movement speed according to task requirements, enabling precise adaptation to different work rhythms: the high-speed mode enhances efficiency, while the low-speed mode ensures the safety of precision operations; thereby effectively balancing operational efficiency with operational safety across a diverse range of task scenarios.

1.1.3 Tactile Feedback (Force Control)

Utilizing fingertip sensors to enable real-time detection and precise control over the force and torque applied by the finger, this system can dynamically adjust the output force: it prevents damage to fragile objects caused by excessive force, while also avoiding the risk of objects slipping due to insufficient force, thereby providing a reliable force-control solution for precision operations such as screw fastening and thin-sheet grasping.

1.1.4 Online Upgrade

The system supports online firmware updates for the Dexterous Hand System via a host computer, enabling continuous iteration of functional modules and optimization of core performance parameters; this facilitates adaptation to industrial scenarios and scientific research requirements that necessitate long-term upgrades and iterations, thereby ensuring the equipment maintains high operational efficiency over an extended period.

1.2 External Dimensions

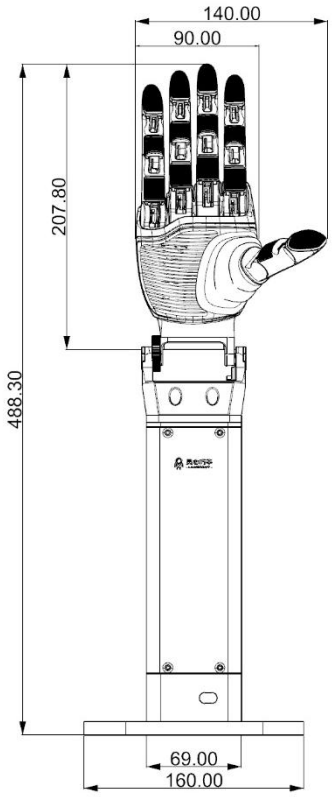

External Dimensions Diagram (Units: mm)

1.3 Number of Degrees of Freedom and Range of Motion

The Linker Hand L30 possesses a total of 17 degrees of freedom and 21 joints, among which 17 are active joints and 4 are passive joints. The active joints utilize high-precision actuation units to achieve sub-millimeter-level motion control and complex posture switching, thereby enabling precision manipulation; the passive joints employ bionic elastic structures that adaptively adjust force feedback during movement, effectively cushioning impacts while reducing system energy consumption. This "active–passive" collaborative design not only ensures human-scale flexible control capabilities but also optimizes power efficiency and structural stability, making it well-suited for fine-operation requirements across diverse scenarios, such as scientific research testing, industrial sorting, and medical rehabilitation.