1.4 Product Parameter

1.4.1 Underlying Parameter

Model	Left side L30 (Standard Edition)
Number of degrees of freedom	17
Number of joints	17 Active + Passive
Driving mode	Tendon-bionic actuation (tendon-rope actuation)
Control interface	CAN FD
Communication frequency	500kbps
Weight	≈1400g
Maximum load	5kg
Working voltage	DC24V
Quiescent current	0.45A
No-load motor average current	0.63A
Maximum current	2.3A
Repetitive positioning accuracy	±0.20mm
Opening and closing time	0.2s

1.4.2 Mechanical Performance Parameters

Performance index	Specific Parameters
Maximum thumb fingertip force	8N
Maximum fingertip force of the four fingers	7N
Maximum gripping force of each finger	12N

1.5 Sensor System

The Linker Hand L30 is available with an optional pressure-sensitive sensor; the specific parameters are as follows.

Parameter	Specifications
Piezoresistive array	6*12

Sensor Force Application Area	9.6*14.4mm
Touch Force	5g
Range	20N
Life span	10 Ten thousand times
Communication Frame Rate	200FPS

2 Installation and Commissioning

2.1 Accessory List

Before installing the Dexterous Hand, first check whether all accessories are complete.

Order number	Name	Quantity	Picture
1	USB-to-CAN FD Debugging Cable	1	
2	USB cable	1	
3	XT30 (2+2) plug-in cable	1	
4	Power adapter	1	
5	Power line	1	

2.2 Installation Instructions

2.2.1 Structural Installation Instructions

Installation requires M4 screws; the specific length should be adjusted according to the thickness of the mounting component. The installation flange schematic diagram is shown below.

As shown.

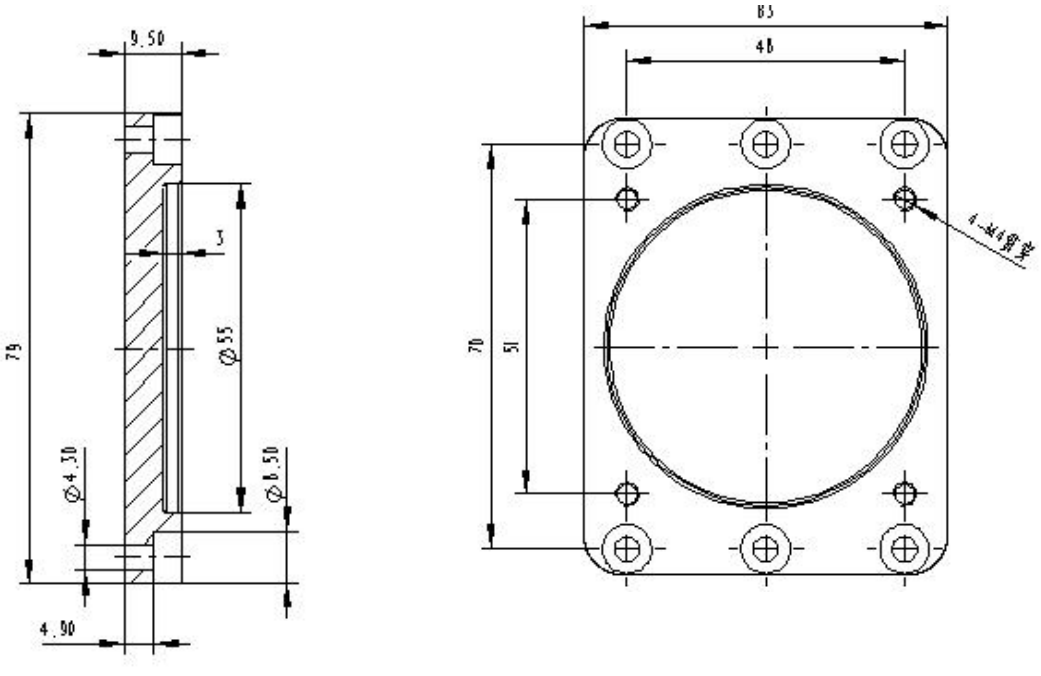

End Fixed Hole Layout Diagram

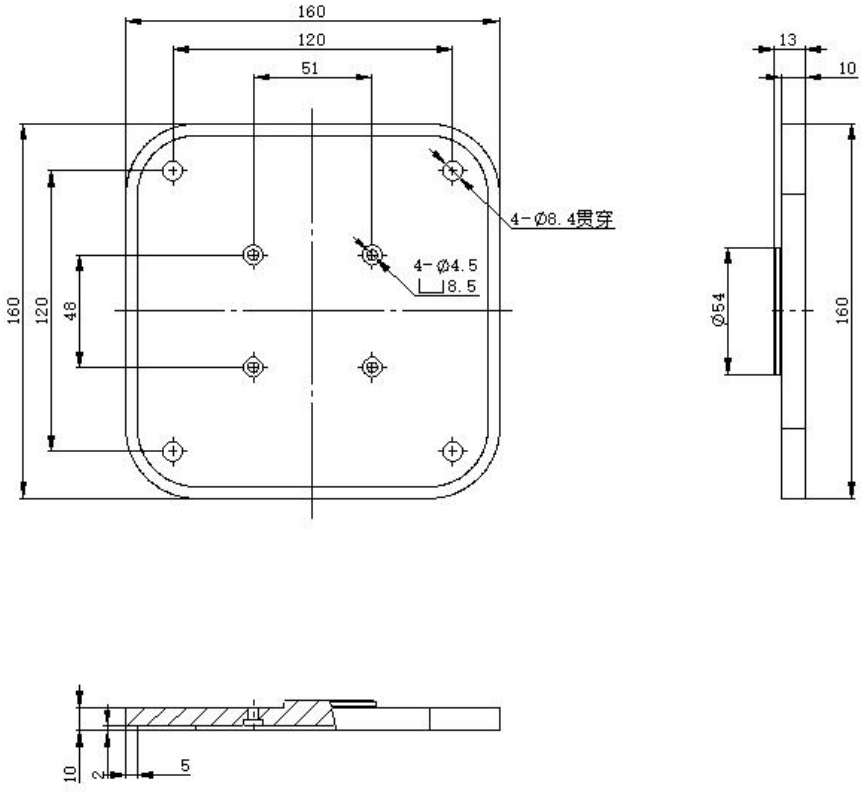

Fixed mounting seat hole layout diagram

2.2.1 Electrical Installation Instructions

The flexible hand utilizes an XT30 (2+2) connector, with the pinout as shown in the table below.

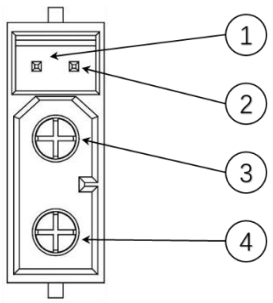

Pin order	Explain
1	CAN L
2	CAN H
3	GND
4	24V

2.3 Software Debugging Introduction

2.3.1 Debugging Cable Connection

To connect the robotic arm to the debugging PC via a USB-to-CAN FD debug cable, plug in the power cable to the power adapter, then plug this adapter into the power port of the USB-to-CAN FD debug cable, and plug the other end of the cable into an AC 220V power strip;

2.3.1 Upper-Level Computer Software Description

1) Extract the compressed archive and run `dexterous_hand_controller.exe`;

2) Flexible Hand Connection and Parameter Settings



Connection Interface Diagram

For the "Connect Device" button in the "Equipment Control" section, the host will automatically connect to the device. Upon successful connection, the product model and serial number will be displayed below;

In "Global Control," you can set the global speed and torque.

3) Control of dexterous hand movements



Joint Status and Control Charts

In the "Joint State and Control" section, you can rotate the corresponding joint by dragging the slider or by entering a specified position;

4) Action Sequence Instructions



Figure **error! No styled text has been specified in the document.** –2 Action Sequence Diagram

The "Animation Sequence Editor" displays all currently loaded animation sequences; you can click the corresponding joint data to make modifications.

- Description of the functions for each button in the "Position Operation" section:

Reading slider values: Read the angle data for each joint on the current device into the sliders;

Save to sequence: Save the joint positions of the current dexterous hand as an action sequence;

Execute: Executes the selected action sequence;

- Introduction to each button in the "Sequence Control" section

Start: Execute the action sequence list according to the parameters configured in the "Operation Parameters" section;

Stop: Stops the currently executing action sequence;

- Description of each button in "File Operations"

Save: Save the current action sequence list to a specified file;

Reading: Reads the motion sequence file into the host computer;

- Descriptions of each parameter in the "Operating Parameters" section

Interval (seconds): After completing the action sequence for the current sequence number, wait for this interval before executing the next action sequence;

Loop: The number of times all action sequences are executed;

Delete: Deletes the currently selected action sequence;

Clear: Clears all action sequences;

- Action sequence effect description:

Move each joint-> Click "Save to Sequence" to generate Sequence 1-> Move

each joint-> Click "Save to Sequence" to generate Sequence 2-> Click "Start" -> This will cyclically execute the movements from Sequence 1 and Sequence 2;

3 After-Sales and Service Information

1) The product is eligible for a 12-month limited warranty from the date of purchase.

2) During the warranty period, for failures caused by manufacturing or material defects, we will provide free repair or component replacement.

3) Disclaimer of Liability: The following situations are not covered by the warranty:

- Surface wear caused by normal use.
- Damage resulting from improper operation, accidents, unauthorized disassembly, or failure to follow the guidelines.

4) If the issue is not a quality problem, no returns or exchanges will be accepted.

5) If your product experiences any malfunction, please contact official after-sales service immediately; do not attempt to disassemble it yourself.

6) Maintenance services outside the warranty period will incur corresponding fees.

Appendix

SDK download URL:https://github.com/linker-bot/linkerhand-ros-sdk

Technical Support Email:support@linkerbot.cn

If you need more product information, please visit our official website:https://linkerbot.cn