Leica TP1020

Tissue Processor

Instructions for Use
English

Order No.: 14 0422 80101 – Revision M

Always keep this manual with the instrument.
Read carefully before working with the instrument.

CE

Version 3.5, Revision M – 06.2021

The information, numerical data, notes and value judgments contained in this Instructions for Use represent the current state of scientific knowledge and state-of-the-art technology as we understand it following thorough investigation in this field.

We are under no obligation to update the present Instructions for Use periodically and on an ongoing basis according to the latest technical developments, nor to provide our customers with additional copies, updates etc. of this Instructions for Use.

To the extent permitted in accordance with the national legal system as applicable in each individual case, we shall not be held liable for erroneous statements, drawings, technical illustrations etc. contained in this Instructions for Use. In particular, no liability whatsoever is accepted for any financial loss or consequential damage caused by or related to compliance with statements or other information in this Instructions for Use.

Statements, drawings, illustrations and other information regarding the contents or technical details of the present Instructions for Use are not to be considered warranted characteristics of our products.

These are determined only by the contract provisions agreed between ourselves and our customers.

Leica reserves the right to change technical specifications as well as manufacturing processes without prior notice. Only in this way is it possible to continuously improve the technology and manufacturing techniques used in our products.

This document is protected under copyright laws. All copyrights to this documentation are held by Leica Biosystems Nussloch GmbH.

Any reproduction of text and illustrations (or of any parts thereof) by means of print, photocopy, microfiche, web cam or other methods – including any electronic systems and media – requires express prior permission in writing by Leica Biosystems Nussloch GmbH.

For the instrument serial number and year of manufacture, please refer to the nameplate on the back of the instrument.

Leica Biosystems Nussloch GmbH
Heidelberger Strasse 17 - 19
69226 Nussloch
Germany
Tel.: +49 - (0) 6224 - 143 0
Fax: +49 - (0) 6224 - 143 268
Web: www.LeicaBiosystems.com

Assembly contracted to Leica Microsystems Ltd. Shanghai

Table of contents

1. Important Information 7

1.1 Symbols used in the text and their meaning 7
1.2 Instrument type 8
1.3 Qualification of personnel 8
1.4 Intended purpose 9

2. Safety 10

2.1 Safety notes 10
2.2 Warnings 11

3. Instrument Components and Specifications 14

3.1 Technical data 14
3.2 Description of the instrument 15
3.3 Standard delivery – packing list 16
3.4 Overview of the Leica TP1020 – with additional wax bath (optional accessory) 20
3.5 General overview Leica TP1020 – with fume control system 22
3.6 Accessories supplied together with the instrument 23
3.6.1 Standard tissue basket 23
3.6.2 Glass beaker with holder 23
3.6.3 Aluminum container with holder (instruments with vacuum function only or as an optional accessory) 24
3.6.4 Wax bath 24

4. Initial Operation 26

4.1 Unpacking instructions 26
4.2 Installation site requirements 29
4.3 Electrical connection 30
4.3.1 Checking the voltage selector setting 30
4.3.2 Adjusting the voltage selector 31
4.3.3 Connecting the power cable 32
4.4 Switching on the instrument 32
4.5 Setting the time 33
4.6 Installing the accessories 33
4.6.1 Installing the wax baths 34
4.6.2 Connecting the wax baths 34
4.6.3 Fastening the wax bath connection cables (instruments with fume control system only) 35
4.6.4 Installing the reagent stations 35

5. The User Interface 36

6. Programming the Instrument 41

6.1 General description 41
6.1.1 Special characteristics of two-basket programs 41
6.2 Setting-up/editing programs 42
6.2.1 Selecting programming mode 42
6.2.2 Selecting the program 42
6.2.3 Selecting the number of baskets 42
6.2.4 Selecting the starting station 43
6.2.5 Activating the vacuum function (instruments with vacuum function only) 43

6.2.6 Selecting infiltration times per station ... 43
6.2.7 Displaying total program duration ... 44
6.2.8 Leaving the programming mode ... 45

7. Preparations for Tissue Processing ... 46

7.1 Filling the reagent stations ... 46
7.2 Filling the wax baths ... 46
7.3 Inserting the tissue basket ... 48

8. Operating the Instrument in the Manual Processing Mode ... 49

8.1 Lifting and lowering the tissue basket ... 49
8.2 Moving the tissue basket to the next station ... 50
8.3 Activating the vacuum function (instruments with vacuum function only) ... 50

9. Operating the Instrument in the Automatic Processing Mode ... 51

9.1 Starting a program ... 51
9.1.1 Immediate start ... 51
9.1.2 Delayed start ... 52
9.2 Editing and modifying programs while a processing cycle is in progress ... 54
9.3 Display end of processing time ... 55
9.4 Pausing a process ... 55
9.5 Resuming a paused process ... 56
9.6 Stopping or terminating a process ... 56
9.7 End of an automatic process ... 57
9.8 Remove the specimens ... 57
9.9 Finishing your daily work ... 57

10. Warning and Error Codes – Troubleshooting ... 58

10.1 Warning codes ... 58
10.2 Error codes ... 59
10.3 "POWER FAILURE" and "WRONG STATION" messages ... 61
10.4 Measures to remove specimen material in case of prolonged power failure ... 62
10.5 "ABORT" message ... 63

11. Cleaning ... 64

12. Maintenance ... 66

12.1 General maintenance instructions ... 66
12.2 Wax bath ... 66
12.2.1 Altering the standard working temperature ... 66
12.2.2 Reset after excess temperature shutdown ... 67
12.3 Replacing the fuses ... 68

13. Optional accessories ... 69

13.1 Three-level tissue basket ... 69
13.2 Basket removal device ... 69
13.3 Basket holder for second tissue basket ... 70
13.4 Connecting the fume outlet tube (optional accessory for instruments with fume control system) 72
13.5 Inserting the activated carbon filters (optional on instruments with fume control system) ... 73

14. Ordering Information **74**

14.1 Accessories **74**

15. Appendix **75**

15.1 Modifying the instrument configuration **75**
15.2 Reagents appropriate for use with the instrument **77**
15.3 Factory-set programs **78**

16. Warranty and Service **81**

17. Decontamination Confirmation **82**

1. Important Information

1.1 Symbols used in the text and their meaning

Symbol:	**Title of the symbol:**	Warning
	Description:	Warnings appear in a white box, orange header and are marked by a warning triangle.
Symbol:	**Title of the symbol:**	Caution
	Description	Indicates a potentially hazardous situation which, if not avoided, could result in death or serious injury.
Symbol:	**Title of the symbol:**	Note
	Description:	Notes, i. e. important user information, appear in a white box, blue header and are marked by an information symbol.
Symbol:	**Title of the symbol:**	Item number
→ "Fig. 7-1"	**Description:**	Item numbers for numbering illustrations. Numbers in red refer to item numbers in illustrations.
Symbol:	**Title of the symbol:**	Function key
Start	**Description:**	Function keys to be pressed on the instrument are displayed as bold, gray and underlined text.
Symbol:	**Title of the symbol:**	Manufacturer
	Description:	Indicates the manufacturer of the medical product.
Symbol:	**Title of the symbol:**	Manufacturing date
	Description:	Indicates the date when the medical device was manufactured.
Symbol:	**Title of the symbol:**	Consult Instructions for Use
	Description:	Indicates the need for the user to consult the Instructions for Use.
Symbol:	**Title of the symbol:**	Article number
REF	**Description:**	Indicates the manufacturer's catalog number so that the medical device can be identified.
Symbol:	**Title of the symbol:**	Serial number
SN	**Description:**	Indicates the manufacturer's serial number so that a specific medical device can be identified.
Symbol:	**Title of the symbol:**	In vitro diagnostic medical device
IVD	**Description:**	Indicates a medical device that is intended to be used as an in vitro diagnostic medical device.

Symbol:	**Title of the symbol:**	CE Label
CE	**Description:**	The CE marking is the manufacturer's declaration that the medical product meets the requirements of the applicable EC directives and regulations.
Symbol:	**Title of the symbol:**	UKCA Label
UK CA	**Description:**	The UKCA (UK Conformity Assessed) marking is a new UK product marking that is used for goods being placed on the market in Great Britain (England, Wales and Scotland). It covers most goods which previously required the CE marking.
Symbol:	**Title of the symbol:**	Country of Origin
Country of Origin: China	**Description:**	The Country of Origin box defines the country where the final character transformation of the product has been performed.
Symbol:	**Title of the symbol:**	WEEE Symbol
	Description:	Symbol for labeling electrical and electronic equipment in accordance with Section 7 of the German Electrical and Electronic Equipment Act (ElektroG). ElektroG is the law regarding the sale, return and environmentally sound disposal of electrical and electronic equipment.
Symbol:	**Title of the symbol:**	China ROHS
10	**Description:**	Environmental protection symbol of the China RoHS directive. The number in the symbol indicates the "Environment-friendly Use Period" of the product. The symbol is used if a substance restricted in China is used in excess of the maximum permitted limit.

1.2 Instrument type

All information provided in these Instructions for Use applies only to the instrument type indicated on the title page.

A nameplate indicating the instrument serial number is attached to the rear side of the instrument.

1.3 Qualification of personnel

- The Leica TP1020 may be operated only by trained laboratory personnel. The instrument is intended for professional use only.
- All laboratory personnel designated to operate the Leica instrument must read these Instructions for Use carefully and must be familiar with all technical features of the instrument before attempting to operate it.

1.4 Intended purpose

The Leica TP1020 is an automated tissue processor specifically designed for fixation, dehydration, infiltration with intermedium and paraffin infiltration of human tissue specimens used for histological medical diagnosis by a pathologist, e.g. for cancer diagnosis.

The Leica TP1020 must be operated exclusively with the reagents listed in chapter (→ p. 75 – 15. Appendix).

The Leica TP1020 is intended for indoor use only.

Warning

Any other use of the instrument is considered improper! Failure to adhere to these instructions may result in an accident, personal injury, damage to the instrument or accessory equipment.

2. Safety

Warning

Make sure to comply with the safety instructions and warnings in this chapter.

Make sure to read these instructions, even if you are already familiar with the operation and use of other Leica products.

2.1 Safety notes

These Instructions for Use includes important information related to the operating safety and maintenance of the instrument.

These Instructions for Use are an important part of the product, and must be read carefully prior to startup and use and must always be kept near the instrument.

Note

If additional requirements for accident prevention and environmental protection exceeding the scope of these Instructions for Use are imposed by laws/regulations of the country of operation, these Instructions for Use must be supplemented by appropriate instructions to ensure compliance with such requirements.

This instrument has been built and tested in accordance with the following safety regulations on electrical measuring, control, regulating and laboratory devices.

To maintain this condition and ensure safe operation, the user must observe all notes and warnings contained in these Instructions for Use.

Note

For current information about applicable standards, please refer to the CE Declaration of Conformity and UKCA Declaration of Conformity on our Internet site:

www.LeicaBiosystems.com

Warning

The protective devices on both instrument and accessories may neither be removed nor modified. Only authorized and qualified service personnel may repair the instrument and access the instrument's internal components.

2.2 Warnings

The safety devices installed in this instrument by the manufacturer only constitute the basis for accident prevention. Primarily responsible for accident-free operation is above all the institution which owns the instrument and, in addition, the designated personnel who operates, services or repairs the instrument.

To ensure trouble-free operation of the instrument, make sure to comply with the following instructions and warnings.

Transport and installation

Warning

- Keep in mind chapter (→ p. 14 – 3.1 Technical data)!
- During transport, keep the instrument upright!
- When transporting the instrument, do not lift it up by the carousel cover!
- Do not operate the instrument in rooms with explosion hazard.
- Caution! The voltage selector is factory preset. Before connecting the instrument to the power supply, make sure this setting is correct for your laboratory's electrical connection values. The socket for connecting the power cable is sealed with an adhesive tape indicating the factory preset voltage for your particular instrument.
- Connecting the instrument to the power with the voltage selector set at a wrong value can cause severe damage to the instrument!
- When adjusting the voltage selector setting, the instrument must be disconnected from the power supply.
- The instrument may only be connected to the power with the cable supplied together with the instrument and it may only be connected to grounded sockets.

Working with the instrument

Warning

- The carousel may not be rotated manually! Severe damage will result from doing so!
- Caution when lowering the carousel! Keep your fingers out of the space between the container lid and the upper rim of the container!
- Caution! In case of a power failure, the carousel automatically descends into a station.
- Instruments equipped with vacuum function may only be operated with the aluminum containers supplied together with the instrument. Glass beakers used in combination with the vacuum accessories have a high hazard potential when damaged!
- While operating the instrument, no liquid may enter in contact with any of the electrical connections or the interior of the instrument.
- Make sure to observe the level indicators on the reagent containers and wax baths.
- Warning! Use caution when handling solvents! Make sure the premises are adequately ventilated! Explosion hazard!

Working with the instrument (continued)

Warning

- Spilled reagents have to be wiped away immediately. In case of long-term exposure, the instrument surfaces are only conditionally resistant to solvents.
- Always observe worker's protection rules and use adequate protective gear (gloves, laboratory coats).
- The heated wax baths may only be used with paraffin. Under no circumstances may they be filled with solvents. When solvents heat, a highly explosive mixture builds up!
- Caution! The interior containers of the wax baths become very hot when the heating function is activated! Do not touch the gray upper rim of the containers with your hands! Burn hazard!
- Caution when handling hot paraffin! Burn hazard!

Cleaning

Warning

- Turn off the power switch before cleaning the instrument.
- Caution! The interior containers of the wax baths become very hot when the heating function is activated! Do not touch the gray upper rim of the containers with your hands! Burn hazard!
- Caution when handling hot paraffin! Burn hazard!
- When cleaning the instrument, no liquid may enter in contact with any of the electrical connections or the interior of the instrument.
- Spilled reagents have to be wiped away immediately. In case of long-term exposure, the instrument surfaces are only conditionally resistant to solvents.
- To clean the painted surfaces, the container platform and the control panel, do not use solvents containing acetone or xylene; neither use abrasive cleaning powders! Only mild household detergents may be used! The lacquered surfaces and the control panel are not resistant to xylene or acetone!

Maintenance

Warning

- Only authorized and qualified service personnel may access the internal components of the instrument for service and repair!
- Before replacing the fuses, turn off the power switch and unplug the instrument!
- Burnt-out fuses may only be replaced by fuses of the same type and specification. For appropriate brands and specifications, see (→ p. 14 – 3.1 Technical data).

Wax baths

Warning

- If the excess temperature repeatedly – please call Leica Technical Service. DO NOT continue to use the wax bath.
- Check if the wax bath works trouble-free. Use of defective wax baths has to be discontinued for safety reasons!
- Empty the wax baths completely before the paraffin cools! When cooling down, the paraffin contracts, which can cause damage to the wax bath.

Activated carbon filter (optional accessory)

Warning

Fire hazard! If a filter becomes saturated with solvent, there is a potential fire risk! It is important that the activated carbon filters are changed at factory recommended intervals.

3. Instrument Components and Specifications

3.1 Technical data

Type	TP1020
Approvals	UL / cUL / VDE
Electrical data	
Nominal voltage	100 / 120 / 230 / 240 V AC ±10 %
Rate frequency	50 - 60 Hz
Power fuses (Type MDA; Bussmann)	2x T 10.0 A L250 V, UL listed
Nominal capacity	700 VA
Classifications according to IEC-1010/EN 61010-1:	
Protective class	I
Pollution degree	2
Overvoltage category	II
Heat emission (max.)	700 J/s
Operating temperature range	5 °C - 40 °C
Relative humidity	80 % non-condensing
Dimensions	
Carousel lid	820 mm Ø
Height	595 - 780 mm
Pitch diameter of rollers	610 mm Ø
Weight	
Net weight (including accessories)	75.8 kg
Net weight, including packaging material	116 kg
Wax baths	
Quantity	2 (optionally 3)
Capacity	1.8 l
Nominal voltage / rated frequency	230 V AC, 50 - 60 Hz
Nominal capacity per station	150 VA
Temperature setting range	45 °C - 65 °C ±3 K
Excess temperature shutdown	85 °C ±5 K

Reagent stations	
Number	10 (9 when 3rd wax bath is installed)
Capacity	1.8 l

Tissue basket	
Quantity	1 (optionally 2)
Capacity	100 cassettes (optionally: 200)

Programs	
Quantity	9, freely selectable
Programmable time per station	99 hrs. 59 min.
Delayed start time of processing	up to 9 days
Dripping time	60 seconds
Vacuum function (types 3, 5, 7, 8 and 11 only, see (→ p. 16 – 3.3 Standard delivery – packing list)	
Pressure differential	max. 500 hPa ±10 % (approx. 0.5 bar)

3.2 Description of the instrument

The Leica TP1020 is an automatic tissue processor designed for laboratory applications. It is used for the fixation, dehydration and infiltration of histological tissue samples with fixatives, alcohol, solvents and paraffin wax.

The reagent stations numbered 1 - 10 are used to contain reagents. Station 10 may be replaced with an optional third wax bath. Stations 11, 12, and if used 10, are heated, temperature controlled wax baths that can be filled with either wax pellets or molten paraffin wax.

Embedding cassettes used to hold the tissue samples, are placed into the tissue basket. The basic instrument is designed for a single tissue basket. An optional second basket can be added. The basket, or baskets, are moved clockwise from station to station.

To ensure thorough infiltration the basket containing the tissue samples is agitated, by moving up and down, at each station. This function can be switched off at any time.

During processing as the tissue basket moves from station to station there is a delay period of sixty (60) seconds during which time the basket is suspended above the station. Excess liquid can drip down during this process. This ensures that there is minimal reagent carryover from station to station.

All instrument functions are activated through the control panel. Real time is displayed via LCD. The instrument can be operated in manual and automatic processing mode. Automatic processing is controlled via 9 different programs which can be individually set up, altered and edited.

If a power failure occurs, the specimens are protected from drying out – even when overnight processing has been selected, since in case of a power failure the tissue basket will always be immersed into a station. Once the power is restored, processing will be resumed where it had been interrupted. After a long-term power failure, critical excess immersion time in a station will be visually displayed.

3.3 Standard delivery – packing list

The Leica TP1020 is available in eleven different configurations, which are described below. All variants also include accessories as described in the table (→ p. 19).

Note

If the vacuum function or extraction is required for the intended processes to be carried out using this instrument, this information must be included in the original order.

It is not possible to retrofit any instrument variant for use with vacuum function or extraction!

		Order No.
Variant 1		
One basket operation / standard tissue basket. Without vacuum / without fume control.		
1	Basic instrument	**14 0422 30543**
12	Glass beakers with handle	14 0422 42545
2	Wax baths, (1.8 liters)	14 0422 30665
1	Standard tissue basket	14 0422 30585
Variant 2		
Two basket operation (double-loading) / standard tissue baskets. Without vacuum / without fume control.		
1	Basic instrument	**14 0422 31418**
11	Glass beakers with handle	14 0422 42545
3	Wax baths, (1.8 liters)	14 0422 30665
2	Standard tissue basket	14 0422 30585
Variant 3		
One basket operation / standard tissue basket. With vacuum / without fume control.		
1	Basic instrument	**14 0422 30536**
10	Aluminum reagent containers for vacuum	14 0422 42545
10	Reagent container carriers	14 0422 42545
2	Wax baths, (1.8 liters)	14 0422 30665
1	Standard tissue basket	14 0422 30585

		Order No.
Variant 4		
One basket operation / standard tissue basket. Without vacuum / with fume control system.		
1	Basic instrument	**14 0422 30537**
12	Glass beakers with handle	14 0422 42545
2	Wax baths, (1.8 liters)	14 0422 30665
1	Standard tissue basket	14 0422 30585
1	Tubing band clamp	14 0422 31973
Variant 5		
One basket operation / standard tissue basket. With vacuum / with fume control system.		
1	Basic instrument	**14 0422 30535**
10	Aluminum reagent containers for vacuum	14 0422 42545
10	Reagent container carriers	14 0422 42545
2	Wax baths, (1.8 liters)	14 0422 30665
1	Standard tissue basket	14 0422 30585
1	Tubing band clamp	14 0422 31973
Variant 6		
Two basket operation (double-loading) / standard tissue baskets. Without vacuum / with fume control system.		
1	Basic instrument	**14 0422 31416**
11	Glass beakers with handle	14 0422 42545
3	Wax baths, (1.8 liters)	14 0422 30665
2	Standard tissue basket	14 0422 30585
1	Tubing band clamp	14 0422 31973
Variant 7		
Two basket operation (double-loading) / standard tissue baskets. With vacuum / with fume control system.		
1	Basic instrument	**14 0422 31412**
9	Aluminum reagent containers for vacuum	14 0422 42545
9	Reagent container carriers	14 0422 42545
3	Wax baths, (1.8 liters)	14 0422 30665
2	Standard tissue basket	14 0422 30585
1	Tubing band clamp	14 0422 31973

		Order No.
Variant 8		
Two basket operation (double-loading) / standard tissue baskets. With vacuum / without fume control system. Connection for optional third wax bath includes second tissue basket carrier.		
1	Basic instrument	**14 0422 31414**
9	Aluminum reagent containers for vacuum	14 0422 42545
9	Reagent container carriers	14 0422 42545
3	Wax baths, (1.8 liters)	14 0422 30665
2	Standard tissue basket	14 0422 30585
Variant 9		
Basic instrument for processing with chloroform as clearing reagent.		
1	Basic instrument	**14 0422 42238**
12	Glass beakers with handle	14 0422 42545
2	Wax baths for chloroform	14 0422 32001
1	Standard tissue basket	14 0422 30585
Variant 10		
One basket operation / standard tissue basket. With fume control system and accessories.		
1	Basic instrument	**14 91020 US01**
12	Glass beakers with handle	14 0422 42545
2	Wax baths, (1.8 liters)	14 0422 30665
1	Standard tissue basket	14 0422 30585
1	Tubing band clamp	14 0422 31973
1	Activated carbon filter – Standard	14 0422 30673
1	Activated carbon filter – Xylene	14 0422 30674
1	Exhaust hose, diameter 50 mm, 4 m long	14 0422 31975
Variant 11		
One basket operation / standard tissue basket. With vacuum, fume control system and accessories.		
1	Basic instrument	**14 91020 US02**
10	Aluminum reagent containers for vacuum	14 0422 42545
10	Reagent container carriers	14 0422 42545
2	Wax baths, (1.8 liters)	14 0422 30665
1	Standard tissue basket	14 0422 30585
1	Tubing band clamp	14 0422 31973

		Order No.
1	Activated carbon filter – Standard	14 0422 30673
1	Activated carbon filter for formaldehyde	14 0422 30674
1	Exhaust hose, diameter 50 mm, 4 m long	14 0422 31975

All instrument variants of the Leica TP1020 come with the following accessories:		
4	Replacement fuses T 10.0 A L250 V	14 0600 00759
1	Screwdriver 5.5 x 200	14 0170 10702
1	Crank handle, size 4, mounted	14 0222 30663
1	Instructions for Use printed (English, with Language CD 14 0422 80200)	14 0422 80001

The country specific power cord needs to be ordered separately. Please find a list of all power cords available for your device on our website www.LeicaBiosystems.com within the product section.

Note

You will find the standard accessories and – in case you ordered them – further parts in the upper portion of the packing box.

Compare the delivered parts with the packing list and your actual order. If you find any discrepancies, please contact your local Leica sales organization immediately.

3.4 Overview of the Leica TP1020 – with additional wax bath (optional accessory)

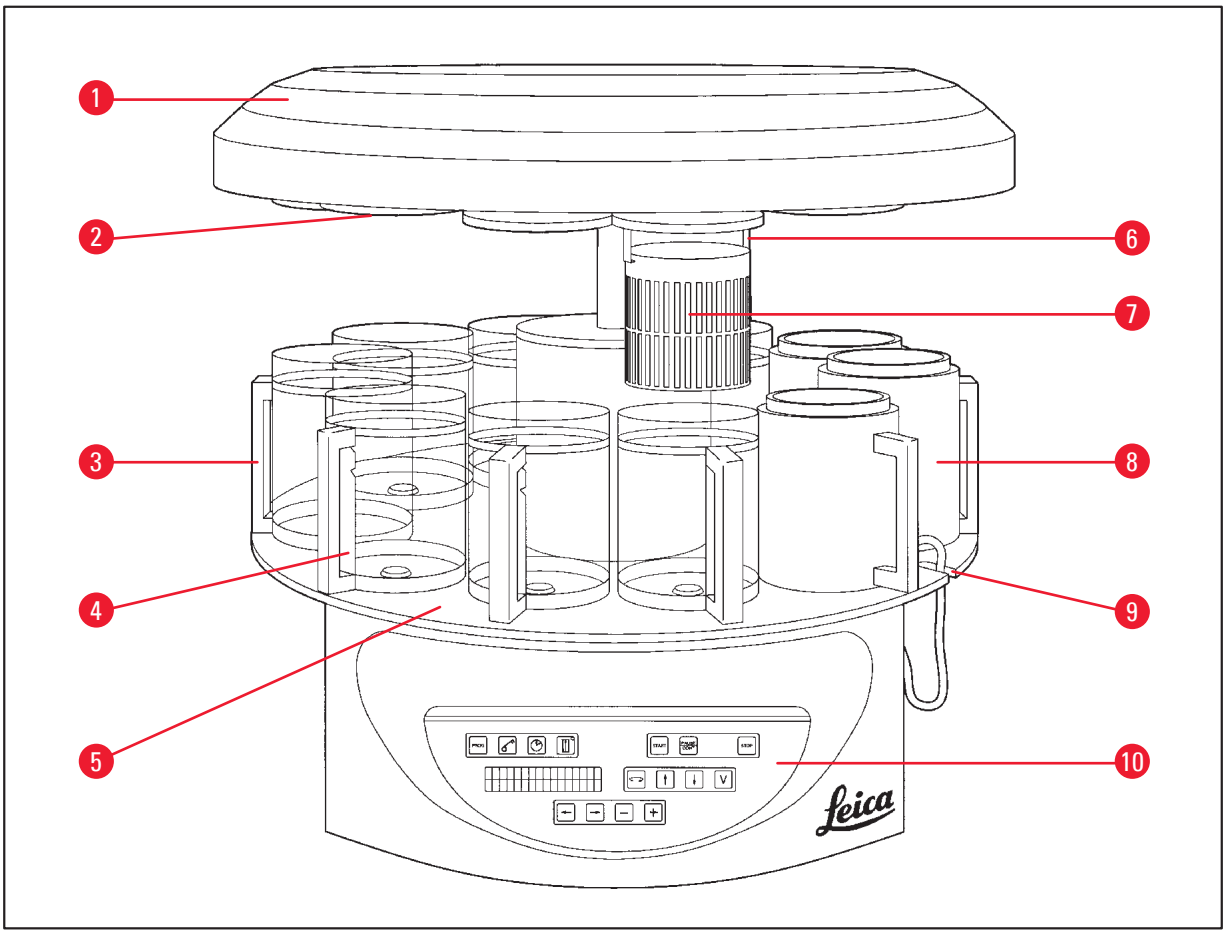

Fig. 1

1	Carousel cover	**6**	Tissue basket holder
2	Reagent station lid	**7**	Standard tissue basket
3	Glass container with holder	**8**	Wax bath
4	Beaker carrier with fill level marks	**9**	Notch for wax bath connection cable
5	Container station platform	**10**	Control panel

Leica TP1020 – rear side

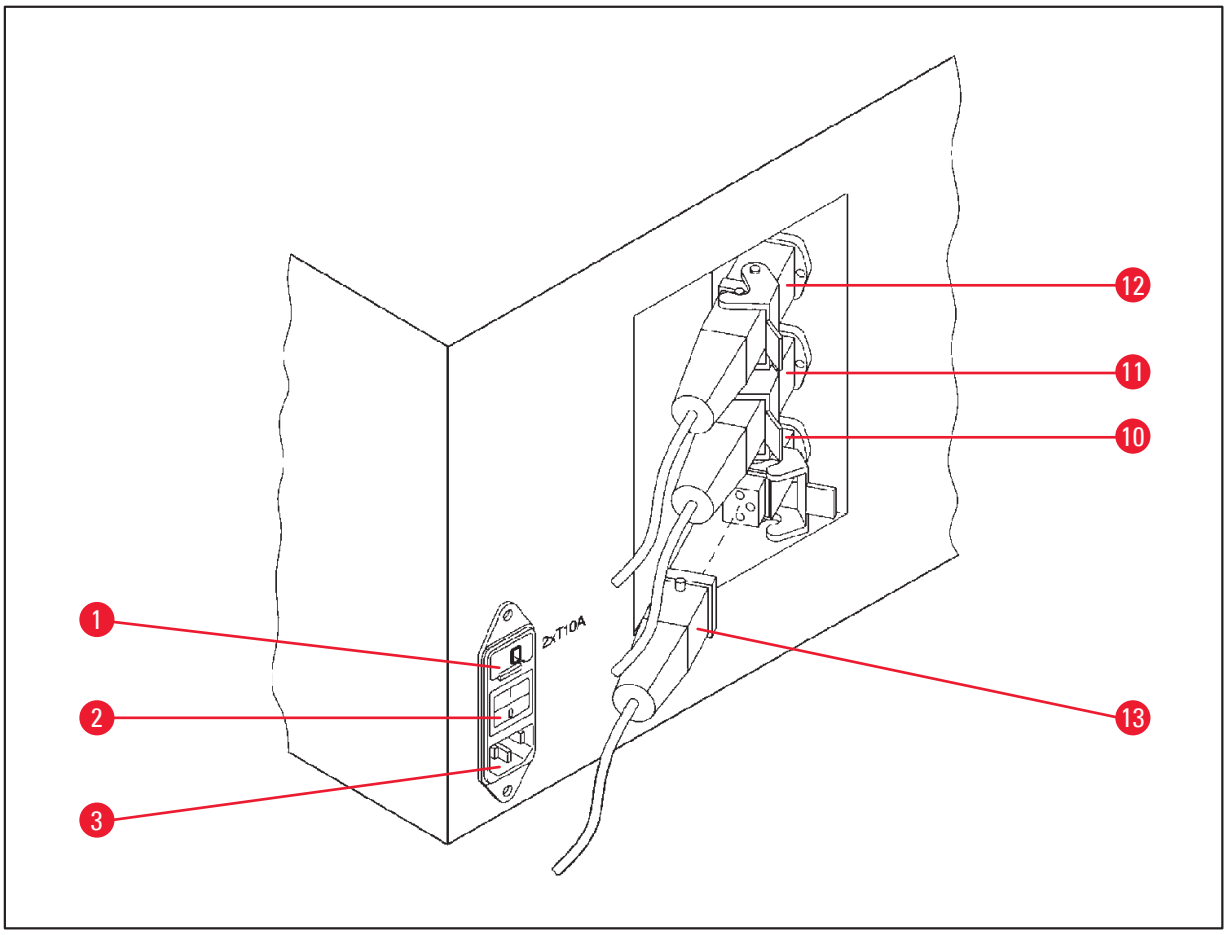

Fig. 2

1 Voltage selector

2 Mains switch

3 Socket for power cable

10 Connections for wax baths

11 (connection socket for

12 station 10 with cap (not pictured) closed)

13 Wax bath plug

3.5 General overview Leica TP1020 – with fume control system

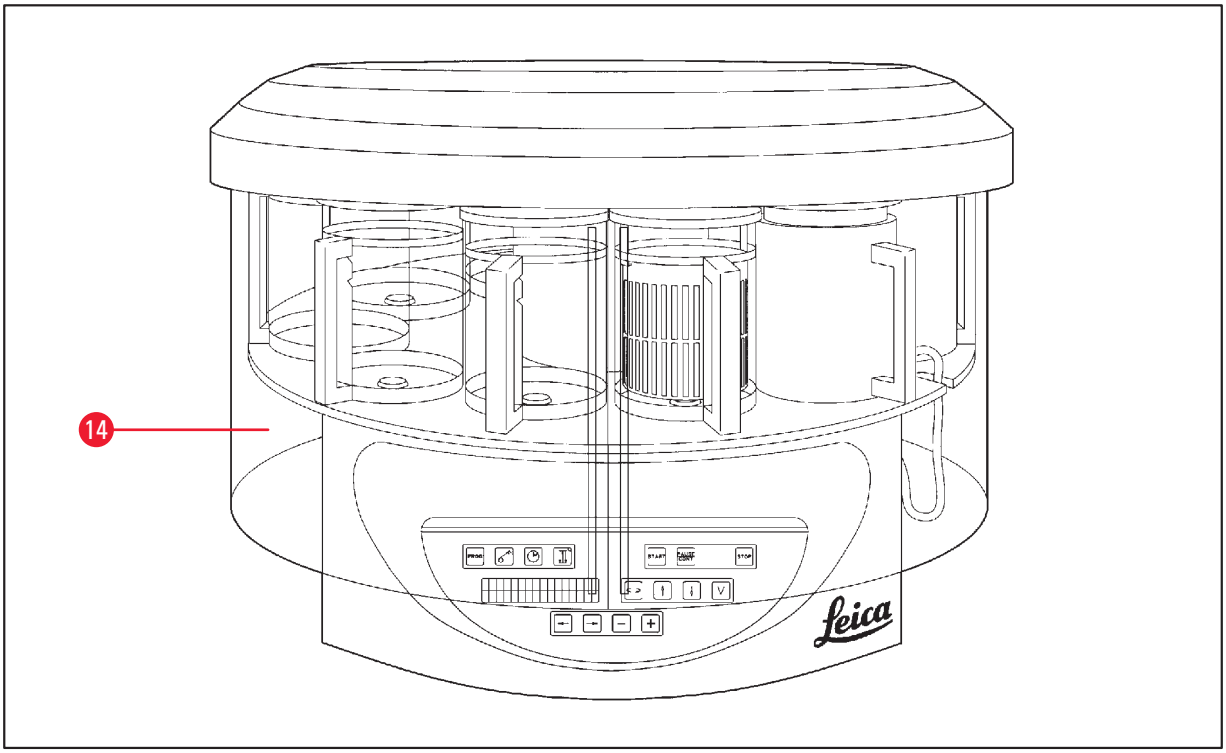

Fig. 3

14 Plexiglas fume containment shield

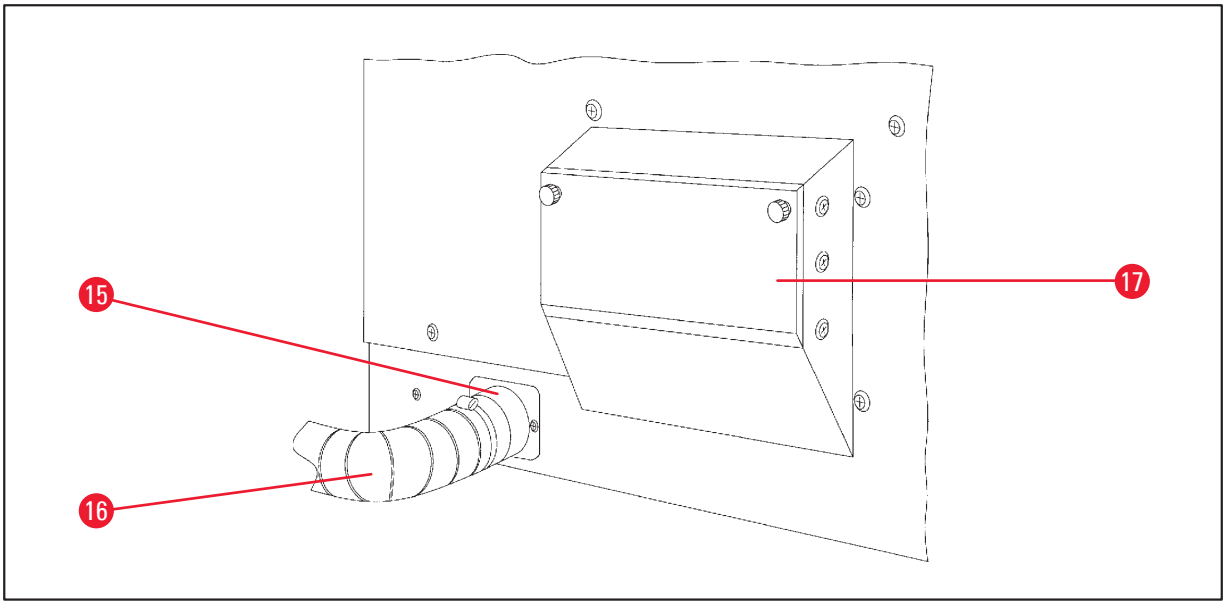

Fig. 4

15 Hose clamp

16 Fume outlet tube (optional accessory)

17 Activated carbon filter receptacle

3.6 Accessories supplied together with the instrument

3.6.1 Standard tissue basket

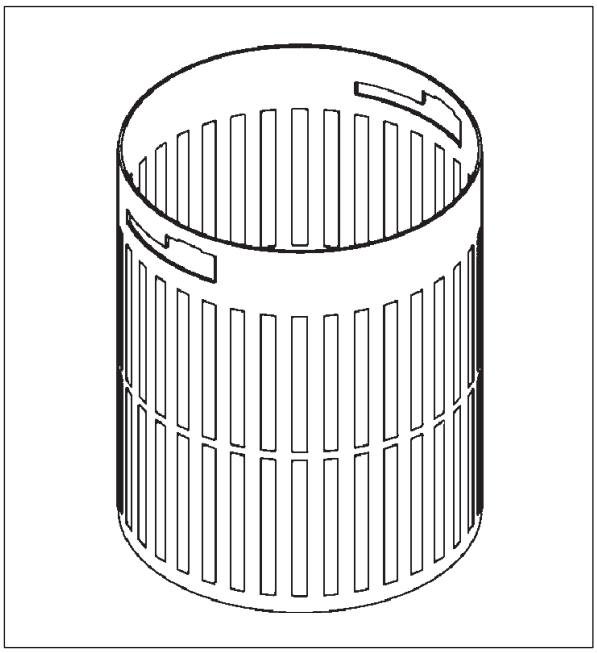

Fig. 5

Holding capacity: 100 cassettes

Tissue cassettes are loosely arranged in the basket. The maximum capacity is 100 cassettes. The cassettes are stacked in the basket. So that the infiltration process is not disturbed, no cassette may lie on top of the stack.
The maximum filling level must be reduced. Depending on the size of the specimens and the use of foam supports or paper towels, the minimum filling level can also be used as the maximum filling level. For processing 100 cassettes, the maximum filling level for the reagents is approximately 1400 ml.

3.6.2 Glass beaker with holder

Fig. 6

Holding capacity: 1.8 l

The reagent container consists of a glass beaker with holder.

The wall of the beaker has two marks **(Min, Max)** that specify the minimum and maximum level in the container.

The level must not exceed the Max mark or fall below the Min mark during filling.

3.6.3 Aluminum container with holder (instruments with vacuum function only or as an optional accessory)

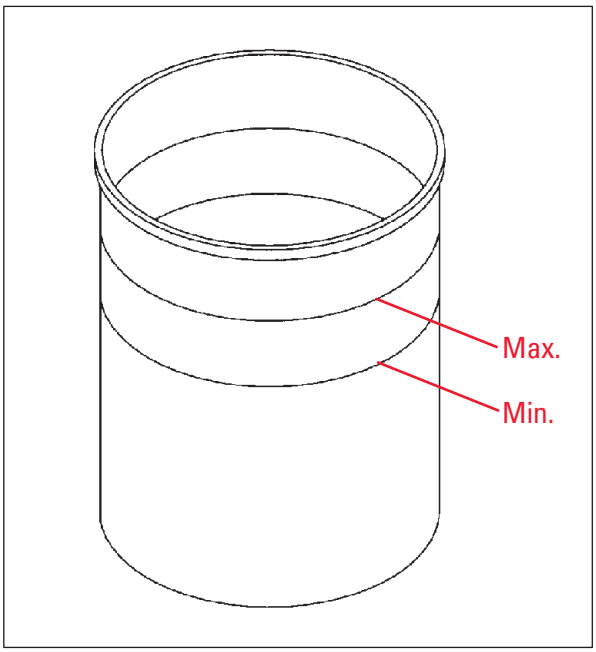

Fig. 7

Holding capacity: 1.8 l

Instruments equipped with vacuum function are supplied with aluminum containers instead of glass containers.

In aluminum containers the level indications marks are located on the inside of the container.

When filling the container make sure the filling level is not below the minimum or above the maximum level indication mark.

3.6.4 Wax bath

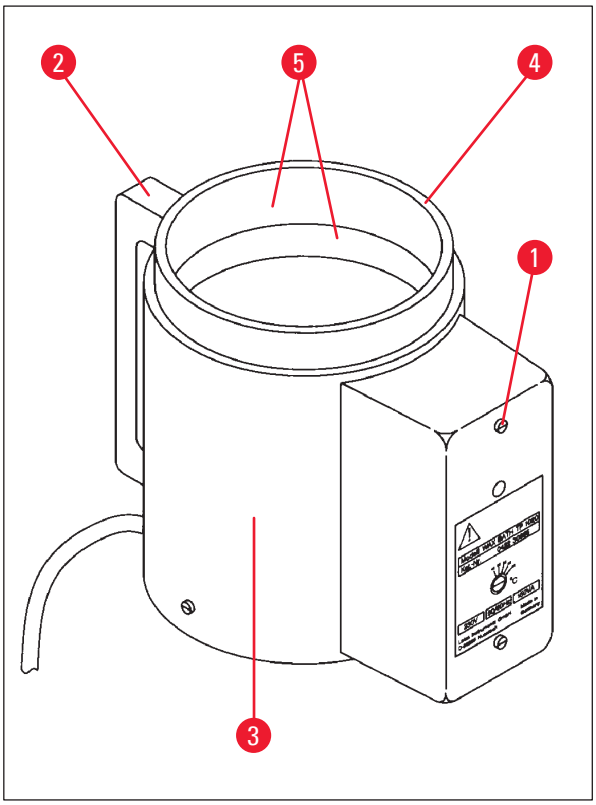

Fig. 8

Holding capacity:	1.8 l
Nominal supply voltages:	230 V AC 50 - 60 Hz
Nominal capacity (heating):	150 VA
Temperature setting range:	45 - 65 °C ±3 K
Excess temperature switch-off mechanism:	at 85 °C ±5 K

If the actual temperature rises above the range of normal working temperature, an excess temperature switch-off mechanism responds. The wax bath heating is disconnected. The yellow signal lamp is extinguished. Use of the wax bath can be resumed only after a cooling down period. For cooling down, disconnect the wax bath connector plug from the socket at the rear of the instrument, or switch off the main switch.

The wax baths are equipped with heating. While the heating is functioning, the yellow pilot lamp lights (→ Fig. 8-1).

The handle (→ Fig. 8-2) is insulated. The outside wall (→ Fig. 8-3) is likewise thermally insulated. However, it becomes hot to the touch in heating operation. Despite this, burn hazard exists when touching it.

Caution

The interior container (→ Fig. 8-4) of the wax bath becomes very hot when the heating function is activated! Do not touch the gray upper rim of the containers with your hands! Risk of injury!

The inside of the interior container (→ Fig. 8-4) is coated with Teflon. The interior container gets very hot. It has minimum and maximum level indicator marks (→ Fig. 8-5).

Warning

- If the excess temperature switch-off mechanism reacts several times, call Technical Service without delay. DO NOT continue to use the wax bath.
- Empty the wax baths completely before the paraffin cools! When cooling down, the paraffin contracts, which can cause damage to the wax bath.

4. Initial Operation

4.1 Unpacking instructions

Note

Fig. 9

When the instrument arrives, check the tilt indicator (→ Fig. 9) on the package. If the arrowhead is blue, the shipment was transported laying flat, was tilted at too great an angle or fell over during transport.

Note this on the shipping documents and check the shipment for possible damage. If obviously there is damage, please contact your freight forwarder immediately.

Warning

Caution when removing the metal strips! There is a risk of injury when opening them (the strip has sharp edges and is under tension)!

Fig. 10

- To remove the metal strips (→ Fig. 10-1), you need metal shears and suitable gloves. Stand next to the crate and cut the strips at the location shown, see (→ Fig. 10) ← above.
- Lift the lid (→ Fig. 10-2) off of the crate.
- Remove the Instructions for Use (→ Fig. 10-3) and packing list.
- Remove all accessories (→ Fig. 10-4) from the compartments of the cardboard grid (→ Fig. 10-5).
- When all parts have been removed, lift them upwards and out and remove the intermediate bottom (→ Fig. 10-6) underneath.
- Lift the outer carton ring (→ Fig. 10-7) upwards and out.

Fig. 11

- Remove the wooden ledge (→ Fig. 11-8) sideways from the interior box (→ Fig. 11-9).
- Remove the interior box (→ Fig. 11-9) in an upward movement.
- To lift up the instrument (using 2 persons), take it by the reagent container platform or by the lower end of the housing (see (→ Fig. 11), below) and lift it from the base plate (→ Fig. 11-10).
- Install the instrument on a stable laboratory bench. Four rollers (→ Fig. 11-11) under the instrument housing permit rotating the instrument on the bench.
- Remove the sponge rubber transport safety device (→ Fig. 11-12) from under the carousel cover (→ Fig. 11-13).
- Depending on the instrument version, 4 foam transport anchors (→ Fig. 11-14) may have to be removed between the Plexiglas plates (→ Fig. 11-15).

Warning

When transporting the instrument, do NOT lift it up by the carousel cover!

Note

For safe transport of the instrument, we recommend keeping the original packaging.

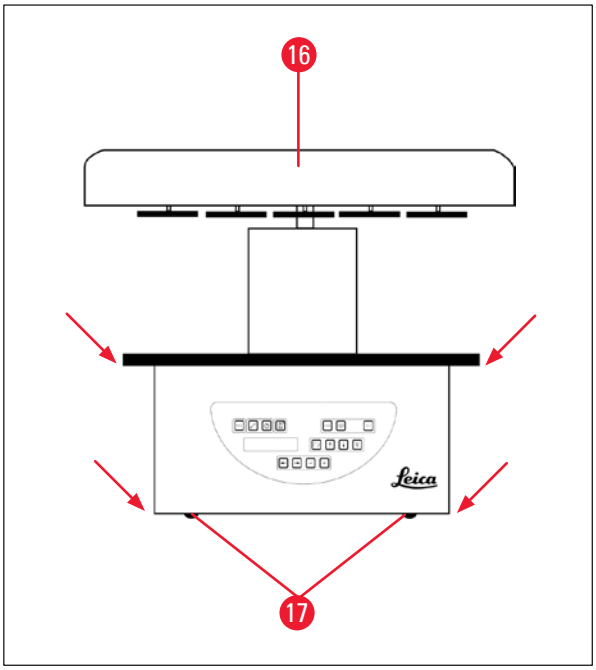

Fig. 12

- To lift up the instrument take it by the reagent container platform or by the lower end of the housing (→ Fig. 12) and lift it from the base plate (→ Fig. 11-10).
- Place the instrument on a stable laboratory table.

Four rollers (→ Fig. 12-17) under the instrument housing permit rotating the instrument on the bench.

- Remove the sponge rubber transport safety device (→ Fig. 11-12) from under the carousel cover (→ Fig. 12-16).

Note

For further secure transport of the instrument we recommend you keep the original packaging material.

4.2 Installation site requirements

Note

Because of the quantity of solvents used for processing specimens and the solvent concentrations that build up, we recommend installing instrument versions without a fume control system or active carbon filter in the laboratory's fume hood.

Warning

The instrument may not be operated in hazardous locations.

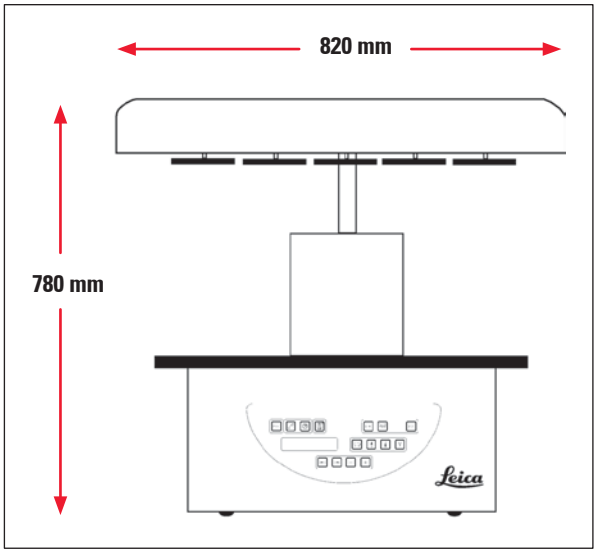

Fig. 13

The installation site has to fulfill the following conditions:

- Stable and plane installation surface,
- Minimum installation surface dimensions: 850 x 850 mm,
- Room temperature consistently between +5 °C and +40 °C,
- Relative humidity should not exceed 80 %.

Necessary conditions for electrical connection

- Grounded wall outlet near enough so it can be reached with the power cable supplied together with the instrument.

Note

If you wish to install the basket holder for a second tissue basket, you should do that now. For mounting instructions, see (→ p. 70 – 13.3 Basket holder for second tissue basket).

4.3 Electrical connection

4.3.1 Checking the voltage selector setting

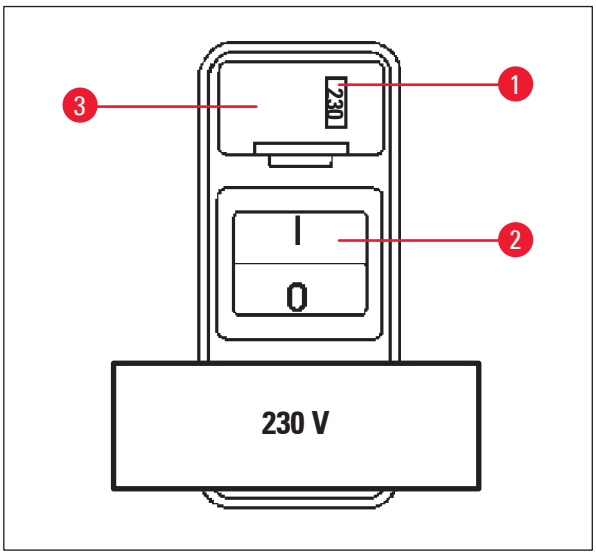

Fig. 14

The voltage selector is located in a shell (→ Fig. 14-3) above the power switch (→ Fig. 14-2) at the rear of the instrument. The actual selected voltage can be seen in the window (→ Fig. 14-1).

- Check if the setting showing in the window (→ Fig. 14-1) corresponds to the nominal voltage in your laboratory.
- Remove the adhesive tape.

If the setting is correct proceed at (→ p. 32 – 4.3.3 Connecting the power cable)

If the setting does not correspond to the nominal voltage in your laboratory, the voltage selector MUST be adjusted to match your laboratory's electrical setting prior to connecting the instrument to the mains.

Warning

Important! The voltage selector is factory preset.

Before connecting the instrument to the power supply, make sure this setting is correct for your laboratory's electrical connection values.

The socket for connecting the power cable is sealed with an adhesive tape indicating the factory preset voltage for your particular instrument.

Connecting the instrument to the power with the voltage selector set at a wrong value can cause severe damage to the instrument!

4.3.2 Adjusting the voltage selector

Warning

When adjusting the voltage selector setting, the instrument must be disconnected from the mains.

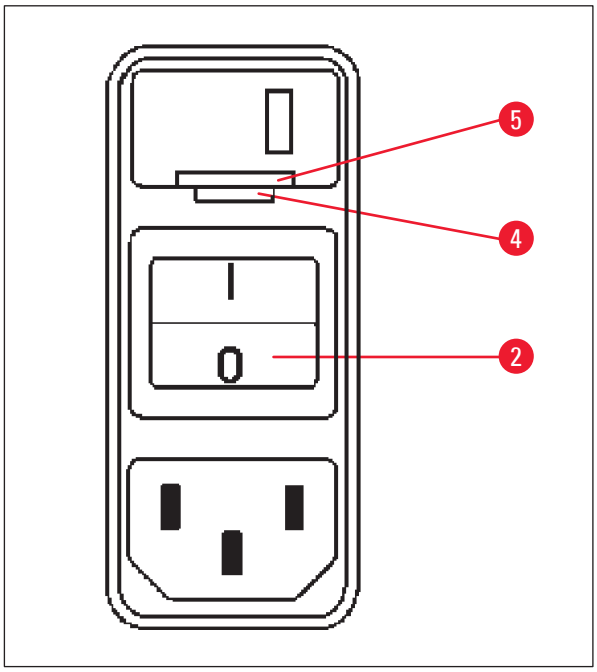

Fig. 15

- Insert the small screwdriver into the smaller one (→ Fig. 15-4) of the two notches at the lower end of the lock (→ Fig. 15-5) using the screwdriver as a lever.

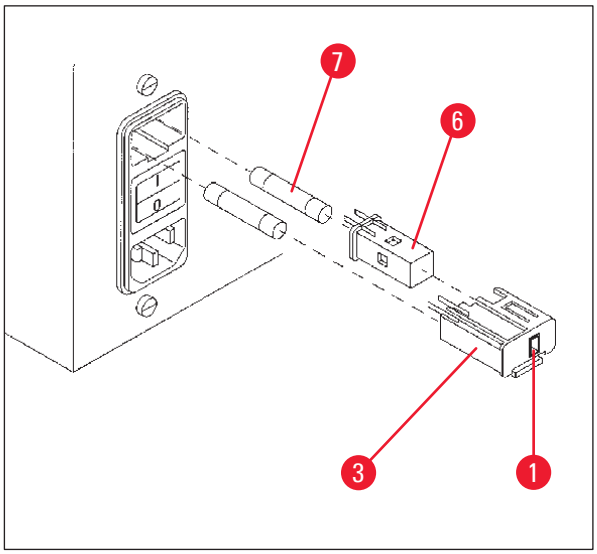

Fig. 16

- Remove the shell (→ Fig. 16-3).
- Remove the voltage selector (→ Fig. 16-6) from the shell (→ Fig. 16-3) and reinsert it so that the correct voltage selection can be seen in the window (→ Fig. 16-1) of the shell.
- Insert the voltage selector shell (→ Fig. 16-3) together with the voltage selector (→ Fig. 16-6) and fuses (→ Fig. 16-7) back into the receptacle in the instrument and press lightly until it locks.
- Check again if the right setting shows in the window (→ Fig. 16-1).

4.3.3 Connecting the power cable

Note

The instrument is supplied together with various country-specific power cables.

Warning

The instrument may only be connected to the power with the cable supplied together with the instrument and it may only be connected to grounded sockets.

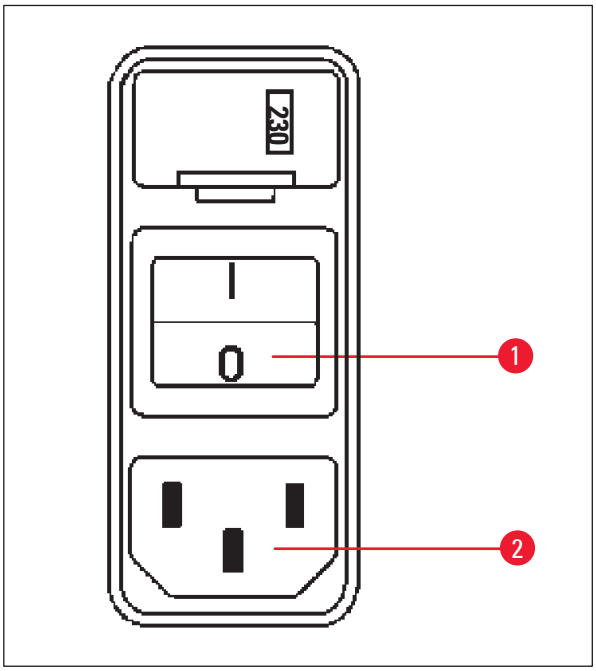

Fig. 17

- Before connecting the power cable, check if the power switch (→ Fig. 17-1) at the rear of the instrument is disconnected ("O").
- Out of the selection of cables, select the one with the plug that fits into your laboratory's wall outlets.
- Connect the power cable to the corresponding socket (→ Fig. 17-2) at the rear of the instrument and plug the power cable into the wall outlet.

The instrument is ready to be switched on.

4.4 Switching on the instrument

- Turn on the instrument with the power switch on the right side at the rear of the instrument.

The instrument does a startup run.

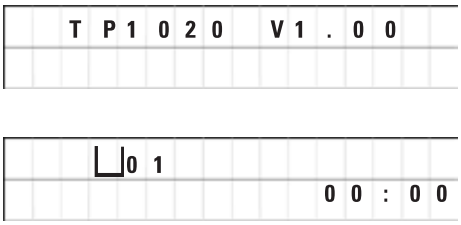

Next, the instrument name and software version (e.g. V1.00) are displayed.

This reading disappears after about 10 seconds.

Next, the number of the processing station where the basket holder is located and the real time indication are displayed.

4.5 Setting the time

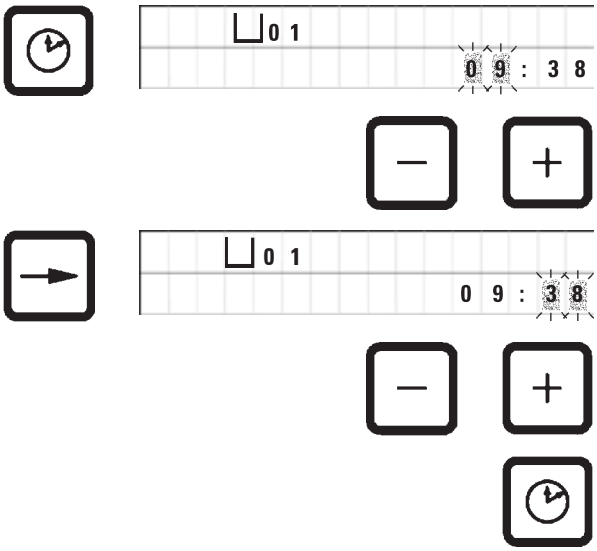

- Press **Clock**.

The cursor blinks at the hour indication.

- To adjust the hours, press **Plus** or **Minus** respectively.
- Press **Arrow Right**.

The cursor jumps to the minute indication.

- To adjust the minutes, press **Plus** or **Minus** respectively.
- To finish setting the time press **Clock** again.

4.6 Installing the accessories

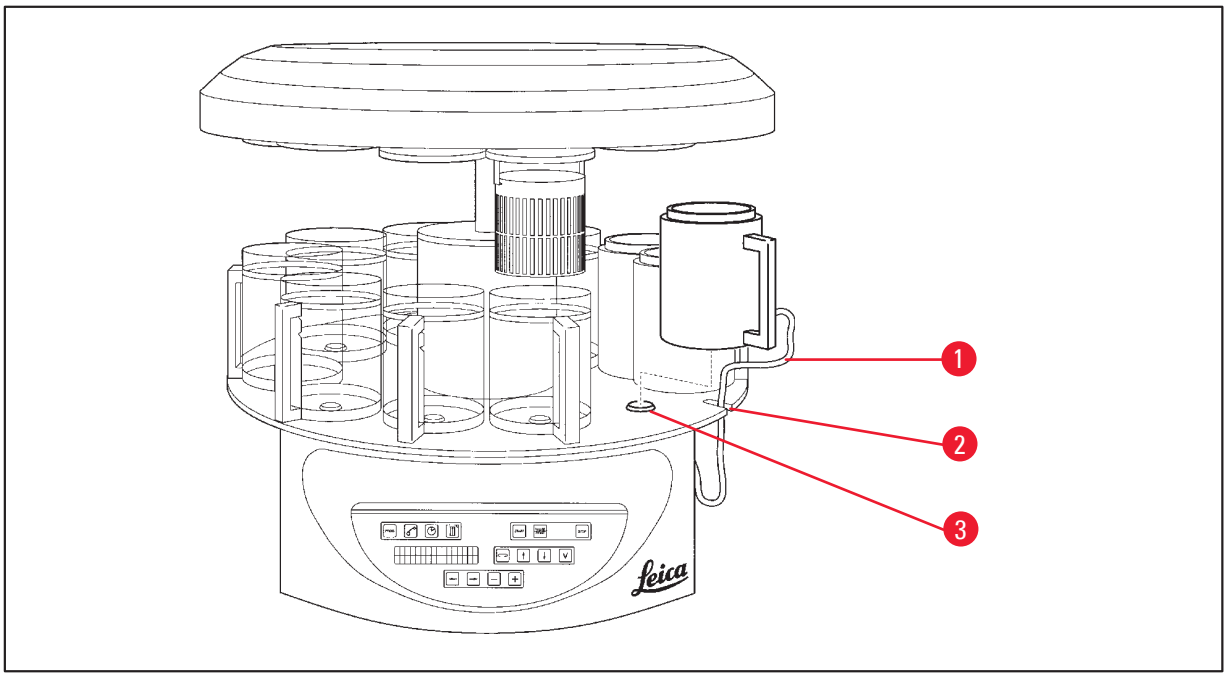

Fig. 18

- Press **Arrow Up** to lift the carousel.

Note

To install and remove the reagent containers and wax baths, the instrument can be rotated on the bench. This ensures good access to all stations at any time.

4.6.1 Installing the wax baths

Note

The Leica TP1020 basic instrument is delivered with two wax baths (no. 11 and 12). Optionally a third wax bath can be connected to station no. 10.

- Insert the wax bath connection cable (→ Fig. 18-1) in the notch (→ Fig. 18-2) in the platform and mount the wax bath onto the station holder (→ Fig. 18-3).

4.6.2 Connecting the wax baths

Note

The connection plugs of each wax bath has to be inserted into the corresponding socket number at the rear of the instrument.

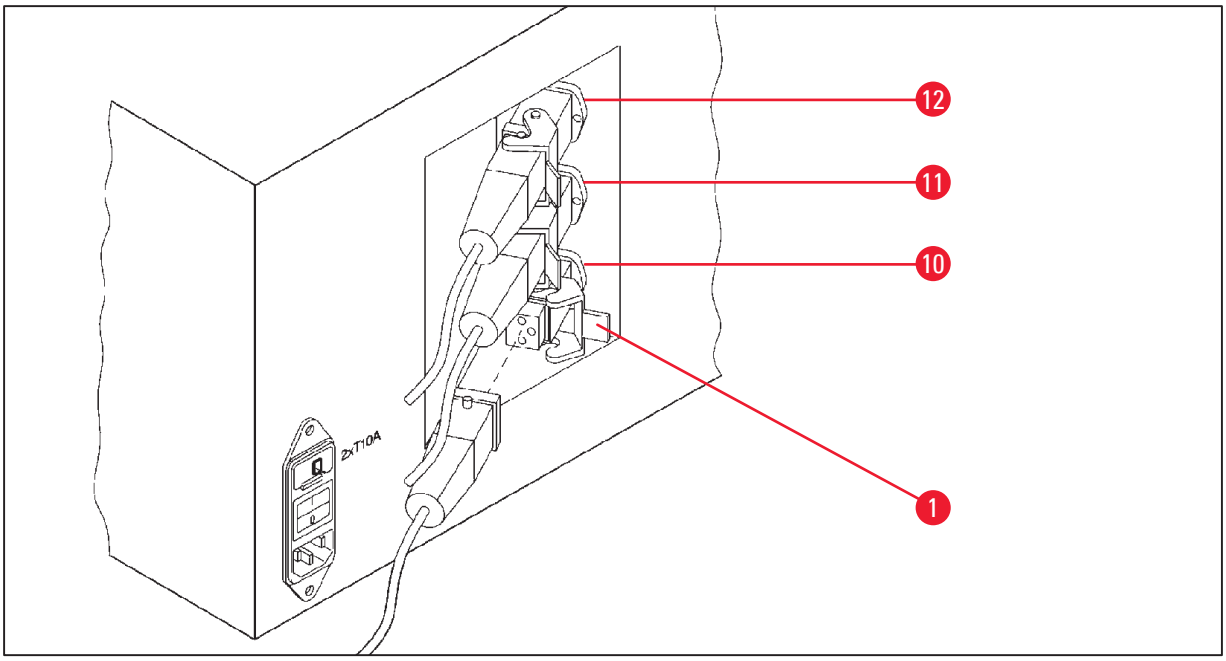

Fig. 19

- Rotate the instrument so that the sockets are easily accessible.
- Insert plug number 12 into socket number 12.
- Insert plug number 11 into socket number 11.
- Lock clip (→ Fig. 19-1) at each plug.

Note

Before connecting a third wax bath to station no. 10, the cover cap has to be removed. Finally, the standard instrument configuration has to be altered accordingly, see (→ p. 75 – 15.1 Modifying the instrument configuration).

4.6.3 Fastening the wax bath connection cables (instruments with fume control system only)

Note

Instruments with fume control system are equipped with a Plexiglas fume containment shield which consists of two parts. To ensure the fume containment shields can be freely rotated and displaced as required without being obstructed by the wax bath connection cables, two magnetic clamps are provided on each of the cables to attach the cables to the housing.

After having mounted and connected the wax baths, place the magnetic clamps on the side wall of the housing so that the cables are fixed in a position that ensures free movement of the fume containment shields.

4.6.4 Installing the reagent stations

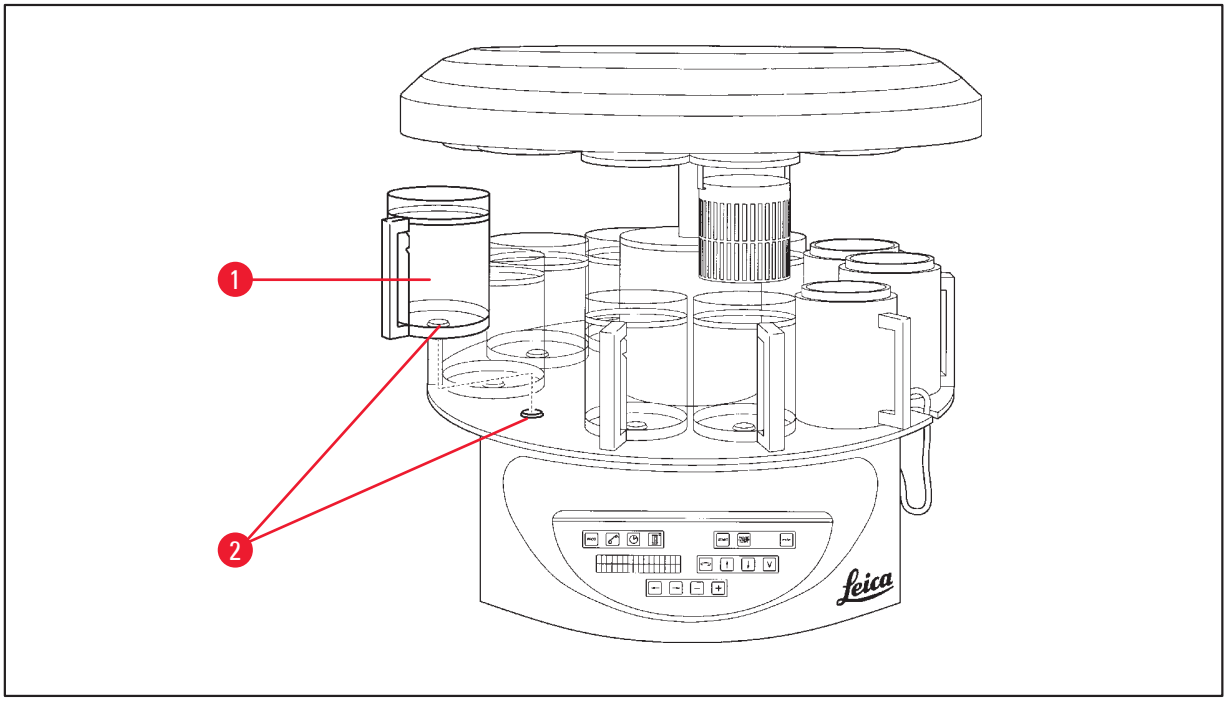

Fig. 20

- Mount the reagent containers (→ Fig. 20-1) (glass or aluminum) onto the station holders (→ Fig. 20-2) of the platform.

5. The User Interface

Control panel

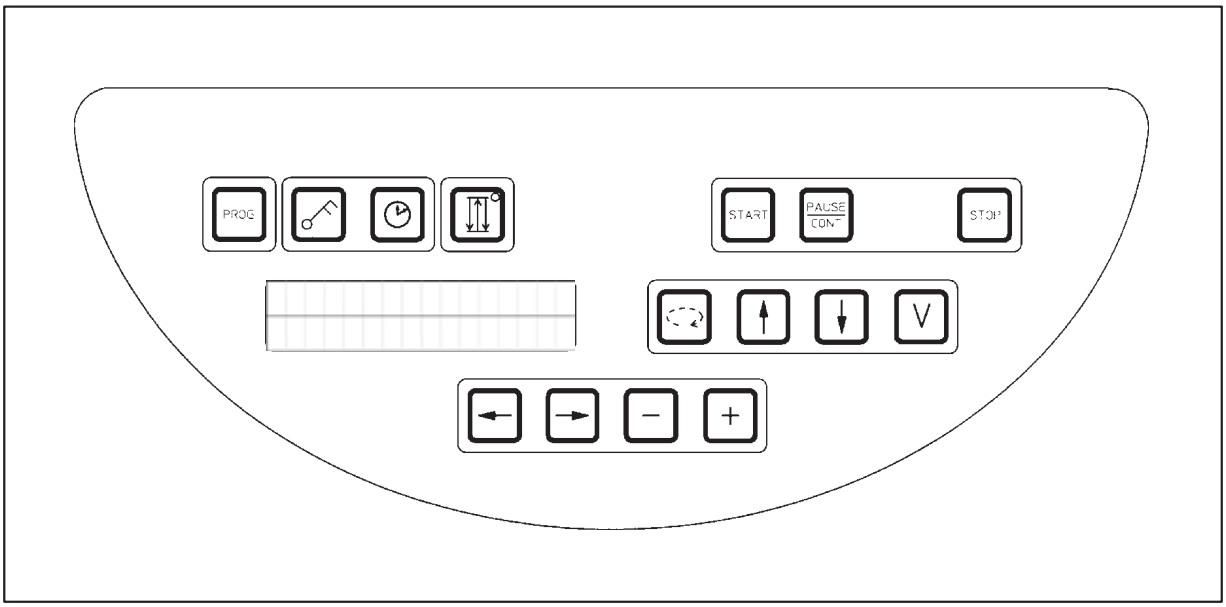

Fig. 21

The control panel is an easy-care key pad. The individual keys are organized in four functional groups. Pressing any key will be acknowledged by an audible signal. This function can be disconnected if required, see (→ p. 75 – 15.1 Modifying the instrument configuration).

Display

The display is a two-line LCD indication, each line with 16 single characters. When the instrument is on, the display is always illuminated.

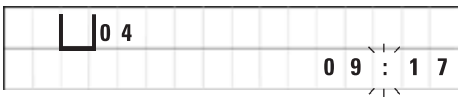

Processing station

The standard display shows the respective number of the station in which/above which the holder for the specimen basket is currently located. At the same time the display also reads real time (24 hour clock). The colon between hours and minutes is blinking.

The display shows all tissue processing parameters as well as the individual programs. Tissue baskets and processing station are displayed with symbols.

In addition to programming features other useful data is displayed; such as program duration and end of processing. Also displayed are warning codes (W:01 - W:06) to ensure trouble-free processing, and error codes (E:01 - E:13) which indicate instrument or data entry errors.

Key functions

Programming, control panel locking, time setting, up-and-down movement of the tissue basket

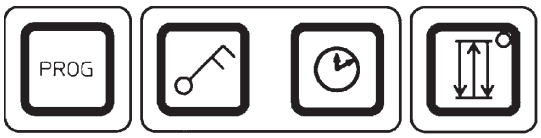

Programming key Prog

To call and quit the programming mode, in which programs are set up, edited and altered, and to display a program which is currently activated.

Lock key Key

To lock all control panel functions as protection against accidental changes of programmed parameters.

- To activate and quit the lock function, press Key for 5 seconds.

LOCKED will be displayed.

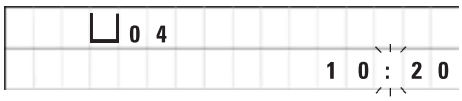

After 10 seconds the display returns to standard reading.

All key functions with the exception of the locking key itself are now locked. None of the key functions can be activated. When pressing any key, the display will always read LOCKED for 10 seconds.

- To unlock the key functions, press Key again for 5 seconds.

All key functions will return to normal.

Clock symbol key

To set the time and to indicate the total duration, start time and expected end of automatic tissue processing programs.

The display differentiates between indication of time (real time, start time when working with delayed starting function, end time) – which is indicated through hyphens and colon – and indication of duration (holding time of the tissue basket in a particular station, total duration of process) – which is indicated through the letters d and h.

Three Arrow key for carousel up and down movement

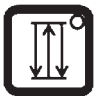

The Three Arrow key is used to start and stop the carousel (tissue basket) up and down movement.

When this function is activated, the tissue basket is lifted and lowered in three-second intervals within the processing stations. This ensures a uniform mixing of all liquids and an optimized tissue infiltration.

This function is automatically activated when an automatic processing cycle is started.

It can be switched off and back on at any time, also when no processing cycle is running.

With the function being activated, the green diode in the Three Arrow key is lighted.

- To switch off the function, press the Three Arrow key.

The diode is extinguished; the function is switched off. It can, however, be turned back on at any time.

- To reactivate the function press the Three Arrow key once again.

Note

If the tissue basket is located in a wax bath that contains solid paraffin, the instrument disconnects the up/down function automatically.

Start, pause, resume, stop and abort automatic tissue processing cycles

Start key

To immediately start processing or to insert delayed starting parameters for automatic processing after having selected a program.

Pause/Cont key

To pause and resume an automatic processing cycle.

When the function is activated, the display reads PAUSE. In addition, 5 minutes after last pressing a key, a double sound signal will remind the user that processing is still paused. This signal will repeat itself every 5 minutes until the automatic processing cycle is resumed.

The pause period is terminated by pressing the Pause/Cont key. The processing cycle is resumed and the remaining immersion time for that station is completed without interruption.

When automatic processing is paused, the keys for manual processing become functional, so that e.g. the tissue basket can be lifted out of the station to add tissue samples or to unload them for further/special processing.

Stop key

To immediately stop the carousel up and down movement (press once) or to abort a processing cycle in progress (press twice).

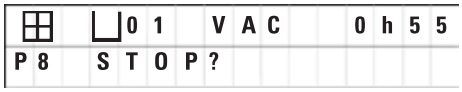

The display reads STOP?.

Manual processing keys

These keys are only functional in the manual processing mode a while and, while an automatic processing mode is paused, via the Pause/Cont key.

Circle Arrow key to rotate the carousel

To move the tissue basket to the next station. Rotation is only clockwise and while the carousel is in the upper end position.

Note

While the carousel is moving, the display reads WAIT! and two blinking arrows indicate the direction of the movement. Only when the carousel has completely come to a halt, this indication will disappear from the display. After the vacuum function is switched off using the V key, raising the basket is delayed until the venting of the container is completed.

Arrow Up and Arrow Down key for vertical carousel movement

Lift and lower respectively the carousel to withdraw the basket from a processing station or insert a basket into a processing station.

To halt an up or down movement while still in progress, push one of the two keys again. The movement will stop immediately when pressing the key.

Vacuum function (variant 2 and 4)

To connect/disconnect the vacuum function in the manual processing mode.

Note

The Leica TP1020 is available with and without a vacuum function. The instrument versions without vacuum functions do have the V key in the control panel; however it is not functional V is not displayed.

Of course a vacuum function cannot be activated with the V key in those cases.

Programming mode keys

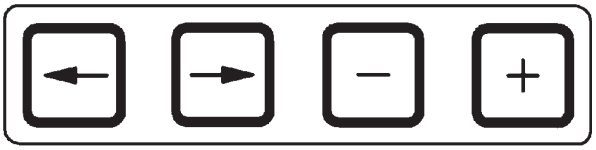

These keys are used to enter or alter parameters when programming.

Arrow Left / Arrow Right keys (cursor)

To move the cursor in the direction of the arrow to the respectively next data entry position.

- When pressing one of the Arrow keys, the cursor jumps to the next data entry position in the direction of the arrow.
- To switch lines press Arrow Left.

Note

These keys are equipped with a repeat function. If one of the Arrow is pressed for a while, the cursor jumps to the respectively next data entry position. If one of the Plus / Minus keys is pressed for a while, the displayed numerical value is continuously increased or decreased.

Plus / Minus keys

To modify the parameter in the position where the cursor is located.

- To increase the numerical value, press Plus.
- To decrease the numerical value, press Minus.
- To change the number of baskets from 1 to 2, press Plus.
- To change the number of baskets from 2 to 1, press Minus.
- To change the station number press Plus or Minus respectively.
- To switch on the vacuum function (types 2 and 4) press Plus.
- To deactivate the vacuum function (types 2 and 4), press Minus.

Note

The Leica TP1020 is available with and without a vacuum function.

For the variants without vacuum function, no V appears in the display. Of course a vacuum function cannot be activated with the V keys in those cases.

6. Programming the Instrument

6.1 General description

Example of a one-basket-program			
Station	**Reagent**	**VAC**	**Duration**
1	Formalin	V	1h00
2	Formalin	V	1h00
3	Alcohol 70 %	V	1h30
4	Alcohol 80 %	V	1h30
5	Alcohol 96 %	V	1h30
6	Alcohol 100 %	V	1h00
7	Alcohol 100 %	V	1h00
8	Alcohol 100 %	V	1h00
9	Xylene	V	1h30
10	Xylene	V	1h30
11	Paraffin	V	2h00
12	Paraffin	V	2h00

Programs are created step by step in the programming mode. Programming parameters have to be entered for each station individually. For that purpose, the cursor is moved to the corresponding data entry position with the **Arrow** keys. The actual parameters are entered with the **Plus** / **Minus** keys. All entered parameters are memorized immediately.

The Leica TP1020 has a memory capacity of 9 programs. Each program can be set up and edited by the user.

Programs nos. 6 to 9 have already been set up ex works. Programs nos. 6 and 7 contain a short-term or long-term program for one tissue basket each. Programs nos. 8 and 9 contain a short-term or long-term program for two tissue baskets each. These programs can be edited.

6.1.1 Special characteristics of two-basket programs

Example of a two-basket-program			
Station	**Reagent**	**VAC**	**Duration**
1	Formalin	V	2h00
2	Formalin	V	2h00
3	Alcohol 70 %	V	2h00
4	Alcohol 80 %	V	2h00
5	Alcohol 96 %	V	2h00
6	Alcohol 100 %	V	2h00
7	Alcohol 100 %	V	2h00
8	Xylene	V	2h00
9	Xylene	V	2h00
10	Paraffin	V	2h00
11	Paraffin	V	2h00
12	Paraffin	V	2h00

In one-basket programs, for every processing station a different infiltration time can be selected.

However, in two-basket programs infiltration time is the same for every processing station. Basket no. 1 starts in station no. 2 and basket no. 2 starts to be processed in station no. 1.

If a one-basket program is modified into a two-basket program by adding a basket, the instrument automatically selects station no. 2 as starting container. At the same time, the container times are automatically set to the dwell time of the displayed station. These changes alter the previous one-basket program permanently.

If the second basket is deleted, the starting container for container station 2 and the infiltration times remain at the same value. They have to be reentered as desired for each individual station.

6.2 Setting-up/editing programs

6.2.1 Selecting programming mode

- To select the programming mode, push the **Prog** key.

The following parameters are displayed:

- Number of baskets ⊞ or ⊞ ⊞,
- Number of processing station ⊔ **01** - **12**,
- Vacuum "ON" or "OFF",
- Tissue infiltration time in the displayed station **0 h 50** min,
- Program number **P1** - **P9**,
- Programming mode **PROG**.

The cursor blinks at the program number.

6.2.2 Selecting the program

- Select the desired program number by pressing **Plus** or **Minus**.

6.2.3 Selecting the number of baskets

- Push the **Arrow Left** key to move the cursor to the upper line.

The cursor blinks next to the first basket symbol.

- To change the number of baskets from 1 to 2, press **Plus**.

- To change the number of baskets from 2 to 1, press **Minus**.

With this, the infiltration for the tissue baskets will be the same in all stations.

6.2.4 Selecting the starting station

- Press Arrow Right to move the cursor to the next entry position.

The cursor blinks at the station number data entry position.

- Select the desired station number by pressing Plus or Minus.

6.2.5 Activating the vacuum function (instruments with vacuum function only)

- Press Arrow Right to move the cursor to the next entry position.

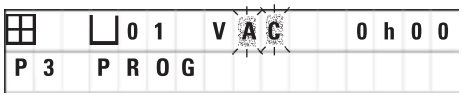

The cursor blinks at the two positions next to the V for vacuum function.

- To activate the vacuum, press Plus.

- To deactivate the vacuum, press Minus.

Warning

The Leica vacuum accessories for enhanced tissue infiltrations may ONLY be used with aluminum containers. Glass beakers used in combination with the vacuum accessories have a high hazard potential when damaged!

6.2.6 Selecting infiltration times per station

- Press Arrow Right to move the cursor to the next entry position.

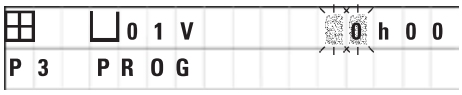

The cursor blinks at the hour entry digits.

- Press Plus or Minus respectively to enter the hours.

- Press Arrow Right to move the cursor to the next entry position.

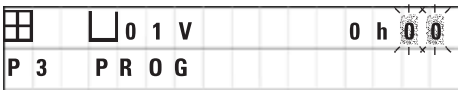

The cursor flashes on both digits destined for entering the minutes.

- Press **Plus** or **Minus** to enter the minutes.

Setting range: 0 hrs. 05 min. to 99 hrs. 59 min.

Note

For stations you wish to leave out of your program, select an infiltration time of 0 h 00 min.

- Press **Arrow Right** to quickly jump to the next station for entering the desired parameters (vacuum and infiltration time).

- Press **Plus** / **Minus** to enter the desired parameters.

Note

In two-basket programs infiltration time is the same for all stations!

6.2.7 Displaying total program duration

Once a program is set up, total run time can be displayed.

- Press **Clock** to display the total run time of the program.

The total duration displayed here is 1 day, 0 hours and 12 minutes.

- To quit the display indication, press **Clock** again.

Note

While you are in the programming mode, you cannot start a program. Prior to starting a program, you must quit the programming mode.

6.2.8 Leaving the programming mode

To end programming you have to leave the programming mode.

- Press **Prog** to quit programming.

Warning

Use caution when handling solvents! Make sure the premises are adequately ventilated! Explosion hazard!

Always observe worker's protection rules and use adequate protective gear (gloves, laboratory coats).

While operating the instrument, no liquid may enter in contact with any of the electrical connections or the interior of the instrument.

Note

To remove and reinstall the reagent containers and wax baths, the instrument can be rotated thus ensuring easy access to all stations at any time.

7. Preparations for Tissue Processing

7.1 Filling the reagent stations

- Lift the carousel cover.
- Fill all stations with the corresponding reagents. Make sure to observe the minimum and maximum level indication marks.

Warning

Spilled reagents have to be wiped away immediately.

In case of long-term exposure, the instrument surfaces are only conditionally resistant to solvents.

- Mount every container onto the station holder at the corresponding station.

Note

The container rims and sealing rings of the lids always have to be clean. The lids have to close tightly – otherwise larger amounts of solvent fumes will escape and, in instruments with vacuum function, vacuum will not be generated.

7.2 Filling the wax baths

Warning

The heated wax baths may only be used with paraffin. Under no circumstances may they be filled with solvents. When solvents heat, a highly explosive mixture builds up!

Caution! The interior containers of the wax baths become very hot when the heating function is activated! Do not touch the gray upper rim of the containers with your hands! Burn hazard!

Caution when handling hot paraffin! Burn hazard!

Altering the standard working temperature

Note

Factory-set standard working temperature is 65 °C (70 °C on the special wax bath model that is resistant to chloroform). When working with paraffin that has a melting point below 58 °C, the instrument working temperature can be readjusted with the corresponding setting screw.

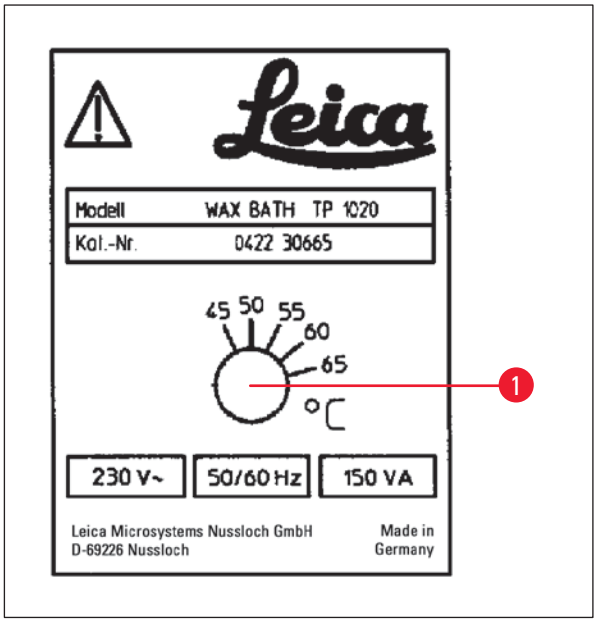

Fig. 22

- Use a screw driver to turn the setting screw (→ Fig. 22-1) to the desired value.

If you find that the paraffin does not melt completely after lowering the working temperature, slightly readjust again.

Warning

Do not overfill the wax baths!

The level of the liquid paraffin must not exceed the upper fill level mark on the inside of the wax bath.

- To fill the wax baths, use wax pellets or paraffin which has already been liquefied.

Note

- When filling the station, make sure the paraffin level is not below the minimum level in which case there is a risk that not all specimens will be entirely immersed in paraffin and thus will not be infiltrated completely.
- It may take several hours to liquefy solid paraffin. Make sure to calculate the waiting time! When refilling wax pellets, again make sure to observe the waiting time for complete liquefaction.

- Place the wax bath onto the corresponding station holder and push the cable into the notch at the edge of the platform.

Check for each wax bath whether it is actually installed at same station number it is connected to at the rear of the instrument.

Note

The wax bath rims and sealing rings of the lids always have to be clean and undamaged.

The covers must close tightly, as for instruments with vacuum function, the vacuum would not be able to be built up.

7.3 Inserting the tissue basket

Warning

Use caution when lowering the carousel! Keep your fingers out of the space between the container lid and the upper rim of the container!

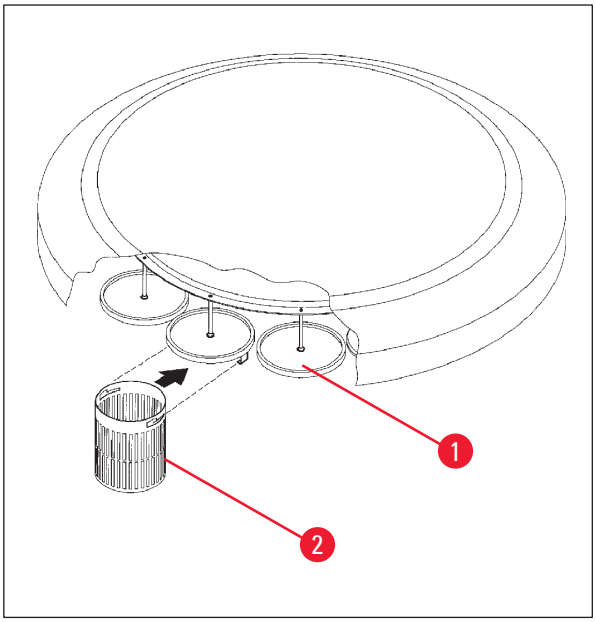

Fig. 23

- Fill the tissue cassettes or capsules into the tissue basket.
- To hook in the tissue basket(s), the basket holder(s) should not be located over a wax bath.
- Lift the carousel in the manual processing mode.
- Rotate the carousel so the basket holder (→ Fig. 23-1) is located above the starting container for basket 1.
- Hook the tissue basket (→ Fig. 23-2) into the basket holder as shown.
- Lower the basket into the starting container in the manual processing mode or start an automatic processing cycle.

Warning

The carousel may not be rotated manually! Severe damage will result from doing so!

When working in the manual mode, all carousel movements are activated through the corresponding function keys on the control panel.

Note

While the carousel is moving, the display reads **WAIT!** and shows two blinking arrows which indicate the direction of movement in each particular case. When the carousel has completely come to a halt, this indication will disappear from the display.

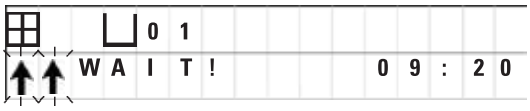

Note

To avoid reagent carryover as far as possible in the manual mode, allow for a sufficient dripping time.

8. Operating the Instrument in the Manual Processing Mode

8.1 Lifting and lowering the tissue basket

Warning

Use caution when lowering the carousel! Keep your fingers out of the space between the container lid and the upper rim of the container!

Pressing the corresponding key, the basket can be lifted out of a station or lowered into one.

- To lift the basket, press Arrow Up.

- To lower the basket, press Arrow Down.

The up or down movement is carried out entirely and a corresponding message is displayed while the action is in progress.

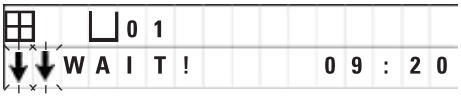

- To interrupt an up or down movement, before it is completed, press one of the two Arrow keys again.

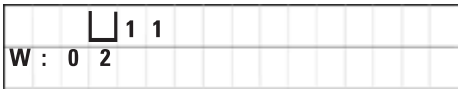

The movement will stop immediately when pressing the key.

Note

If one of the warning codes W:01 - W:03 (→ p. 58 – 10.1 Warning codes) is displayed while you try to lower the basket into one of the wax baths, check whether the paraffin is actually liquefied.

If yes, you may carry on and lower the basket into or lift it out of the wax bath.

- To lower the basket press Key and Arrow Down simultaneously.

or

- To lift the basket, press Key and Arrow Up simultaneously.

8.2 Moving the tissue basket to the next station

To transport the tissue basket from one station to the next, the Circle Arrow key has to be pressed. The movement can only be carried out in single steps and clockwise.

- Press Circle Arrow.

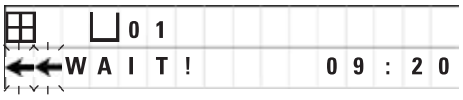

The basket is moved to the next station. WAIT! and two blinking arrows, indicating in which direction the basket is moving, are displayed.

The carousel will stop when the basket is above the next station without lowering the basket into the station.

- To move on to the next station, press Circle Arrow again.

8.3 Activating the vacuum function (instruments with vacuum function only)

Note

The Leica TP1020 is available with and without a vacuum function. Instruments without vacuum function also have the V key for vacuum on the control panel, however this key is not functional. V is not displayed. Of course a vacuum function cannot be activated with the V keys in those cases.

Warning

Instruments equipped with vacuum function may only be operated with the aluminum containers supplied together with the instrument. Glass beakers used in combination with the vacuum accessories have a high hazard potential when damaged!

In the manual processing mode, pressing a key activates/deactivates the vacuum function.

- Press V to activate vacuum.

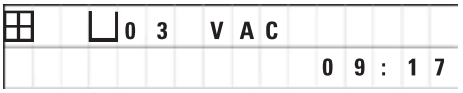

The display reads VAC (vacuum). The pump noise diminishes while vacuum is generated.

- To deactivate the vacuum, press V again.

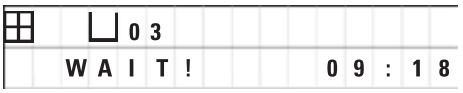

VAC disappears from the display. The vacuum is deactivated.

While the container is being ventilated, a slight hissing noise can be heard. Only after the station has been completely ventilated can the tissue basket be lifted out of it.

9. Operating the Instrument in the Automatic Processing Mode

9.1 Starting a program

Note

A program can either be started immediately or at a later point in time using the delay function.

9.1.1 Immediate start

Note

All corresponding parameters are displayed, such as number of baskets, starting position (station number), vacuum on/off, and infiltration time of the basket in the starting container. Therefore, check the parameters on display and decide if you actually wish to start the displayed program. Otherwise select another program.

The cursor blinks at the program number data entry position. For a program to be selectable for use, at least one infiltration time for one processing station must have been set.

- To start a program, press Start.

- Select the desired program number by pressing Plus or Minus.

- To start the selected program immediately, press Start again.

Note

The warning codes W:04 - W:06 (→ p. 58 – 10.1 Warning codes) are displayed for programs of less than 8 hours duration from start until the basket reaches the first wax bath. Check if the available amount of time is sufficient for the paraffin to liquefy completely. If this is not ensured, fill the wax baths with liquid paraffin.

- To override the warning codes and start processing, press Key and Start simultaneously.

After the drain time of 60 seconds, the carousel will automatically move to the programmed starting position.

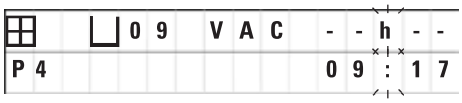

While the basket is being moved, the display reads the numbers of the container stations the carousel is rotating past. Instead of the infiltration time h will be displayed.

As soon as the basket has arrived at the programmed starting station, it will be lowered into that station.

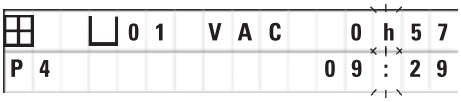

From that point on, the remaining infiltration time of the basket in the current station is displayed. While processing time is running, the display reading is updated in one-minute intervals; i.e. you can always see exactly the remaining infiltration time for each station.

9.1.2 Delayed start

Select starting time

- Press **Start**.

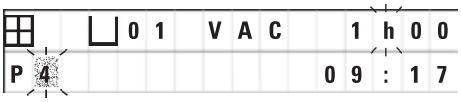

The program which was used last is displayed. Decide whether you want to start that particular program or select another one.

- To enter the desired starting time, press **Arrow Right**.

The display reads **START** and the cursor blinks at the data entry position for the days of delay:

0 = Start at the same day (= today),

1 = Start the next day (= tomorrow),

2 = Start in two days (= the day after tomorrow), etc.

Note

The delay function enables you to start a program e.g. during the weekend, so it will be completed by the time you return to work on Monday.

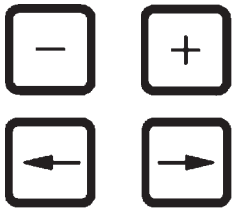

- Press **Plus** / **Minus** to enter the number of days.
- Press **Arrow** to move the cursor to the data entry position for the hours.
- Press **Plus** / **Minus** to enter the number of hours.
- To move the cursor to the digits destined for entering the minutes, push the **Arrow** key.
- Press **Plus** / **Minus** to enter the number of minutes.

The program shown here would be started the next day at 7.30 PM.

- To activate the delay function press **Start**.

Once the delay function has been activated, the tissue basket will move immediately to the selected starting container.

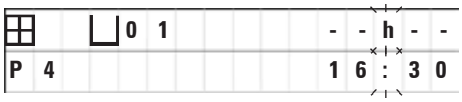

While the basket is waiting in the starting container for the actual program to start, the display reads --h--.

When pressing Clock the display switches from real time indication to reading the selected starting time and the resulting end time.

Display end of processing time

To check if the programmed starting time leads to an acceptable end of run time:

- Press Clock.

In the example shown here the end of processing would be the day after next at 9:48 AM.

Edit and change starting time (when using the delayed starting function)

- Press Clock again.
- Check the selected starting time and if necessary change it as appropriate to achieve the desired end or run time.

- To activate the delay function press Start.

Note

The warning codes W:04 - W:06 (see (→ p. 46 – 7. Preparations for Tissue Processing)) are displayed for programs of less than 8 hours duration from start until the basket reaches the first wax bath. Check if the available amount of time is sufficient for the paraffin to liquefy completely. If this is not ensured, fill the wax baths with liquid paraffin.

- To override the warning codes and start processing, press Key and Start simultaneously.

The program will be started at the selected delay time.

- To quit the display indication, press Clock again.

Locking the key functions

Note

To protect program settings against unintended deletion or alterations, the key functions of the control panel can be locked.

- To lock the panel, press Key for 5 seconds.

LOCKED will be displayed.

After 10 seconds the display will return to standard reading. Every time a key is pressed, LOCKED will be displayed again.

- To unlock the control panel functions, press Key again for 5 seconds.

9.2 Editing and modifying programs while a processing cycle is in progress

Note

Programs can be edited and changed while a processing cycle is in progress. All programs can be edited and changed with the exception of the program currently in progress. A program in progress can be displayed but not changed.

PROG

- Activate the programming mode.
- Select a program.

To verify and/or change the selected parameters,

- Move the cursor to the station number entry position (Arrow Right/Left = cursor keys)
- Modify the station number pressing Plus or Minus and thus edit, and if necessary alter, step by step all station parameters.

Note

All modifications are saved immediately. The program currently in progress cannot be changed!

PROG

- Press Prog to quit programming.

9.3 Display end of processing time

While a processing cycle is in progress, it is possible to display the expected end of run time.

- To display end of run time, press **Clock**.

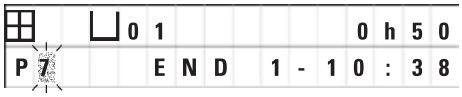

In the example shown here end of processing would be the next day at 10.38 AM.

- To quit the display indication, press **Clock** again.

9.4 Pausing a process

Automatic specimen processing can be interrupted and resumed later, for example to reload specimens.

- To interrupt the program, press the **Pause/Cont** key.

PAUSE is displayed.

Note

While a run is paused, **PAUSE** will be displayed continuously. In addition, 5 minutes after last pressing a key, a double sound signal will remind the user that processing is still paused. The sound signal will recur in 5 minute intervals until processing is resumed.

When in **PAUSE**, the keys for manual operation become functional, e.g. to lift the tissue basket out of a station to add specimens. The carousel can also be rotated to move the basket to any processing station, see (→ p. 49 – 8. Operating the Instrument in the Manual Processing Mode).

9.5 Resuming a paused process

- To reassume processing press **Pause/Cont** again.

Pressing this key will lower the basket into the station. Processing continues as programmed.

While a run is paused, the infiltration time countdown in the actual station will also be interrupted. When processing is resumed, the remaining infiltration time in the station will be carried out without interruption. Thus, the end of run time of a process will be postponed by the length of time the process was paused.

The display reading will automatically be updated, showing the new end of run time.

If there is an emergency, an automatic processing cycle can be stopped immediately and – in a subsequent step – entirely aborted.

9.6 Stopping or terminating a process

- To stop a processing cycle in progress press **Stop**.

The carousel up-and-down movement stops immediately.

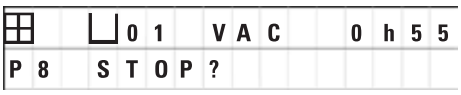

The display reads **STOP?**.

With this the instrument is asking you whether you really want to abort the processing cycle currently in progress?

- To resume processing, press **Start**.

Processing will continue as programmed.

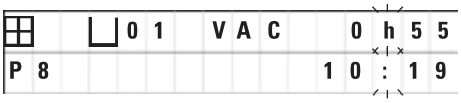

If there is an emergency, an automatic processing cycle can be stopped immediately and – in a subsequent step – entirely aborted.

Processing will continue as programmed.

- To abort the process, press **Stop** again.

This will terminate the specimen processing definitely without any option to resume processing.

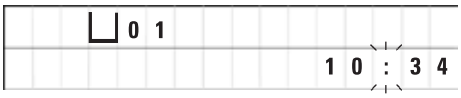

The tissue basket remains immersed in the current station and has to be removed in the manual processing mode.

9.7 End of an automatic process

The termination of automatic specimen processing is indicated on the display, supported by an audible signal that is repeated in 30-second intervals.

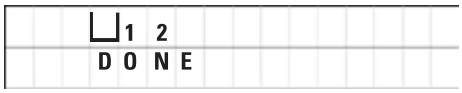

The position of the specimen basket and **DONE** appear in the display.

- Press any key to confirm the message and turn off the sound signal.

The specimens can now be removed in the manual processing mode.

9.8 Remove the specimens

- Lift the carousel.
- Allow for the tissue basket to drain in that position.
- Lift the tissue basket slightly with your hand and pull it out of the basket holder in a horizontal movement.
- Lower the carousel.

9.9 Finishing your daily work

Note

Due to the relatively long time paraffin requires to melt, the instrument should not be turned off routinely after finishing the day's last processing cycle.

- Check the filling level and quality of the liquid in each station (reagent and wax baths) and refill or exchange completely if necessary.
- Clean the edges of the reagent containers and wax baths as well as the seals of the lids, see (→ p. 64 – 11. Cleaning).
- Wipe the control panel clean.
- Press **Key** to lock the panel and that way protect program settings against accidental alteration or misuse.

10. Warning and Error Codes – Troubleshooting

10.1 Warning codes

The warning codes W:01 - W:06 may be displayed.

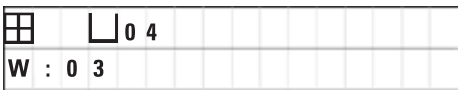

W:01, W:02, W:03 – paraffin in station no. 10, 11, 12 is still solid.

W:04, W:05, W:06 – paraffin in station no. 10, 11, 12 may still be solid when basket no. 1 arrives.

When these warning codes are displayed, a short sound signal (very short sound – very short sound) is emitted and repeated in 5 minute intervals.

W:01 - W:03 are displayed by the processing cycle upon occurrence, e.g. when the basket is due to be immersed into a wax bath as programmed.

W:04 - W:06 are displayed immediately when starting an automatic processing cycle of less than 8 hours duration from start until the basket reaches the first wax bath.

Note

Solid paraffin takes several hours to melt.

Please keep this in mind and make sure to switch on the instrument early enough so the paraffin will be molten and ready for use when necessary.

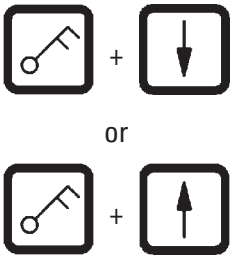

- To quit warning codes W:01 - W:03 press any key.
- To lower or lift the tissue basket press Key and Arrow Up or Arrow Down simultaneously.

Note

W:01 to W:03 block transportation of the tissue basket into or out of the wax bath of station 10, 11 or 12. However, if you are certain that the paraffin is actually liquefied, you can manually immerse the tissue basket into or remove it from the wax bath.

- To override the warning codes W:04, W:05 and W:06 press Key and Start simultaneously to start processing.

Code	Possible root cause	Troubleshooting
Warning code "W:01", "W:02", "W:03" in manual processing mode	Paraffin in wax bath stations 10/11/12 still solid.	• To quit the warning code, press any key. • Check if the paraffin is really molten. • If you find that the paraffin is molten, pause the automatic processing cycle and – in the manual processing mode – by pressing Key and the corresponding Arrow key simultaneously, lower the basket into the wax bath or lift it out of the wax bath.
Warning code "W:04", "W:05", "W:06" when starting an automatic processing cycle	Total duration of program from start until the basket reaches the first wax bath is less than 8 hours. Paraffin in stations 10/11/12 possibly still solid upon arrival of tissue basket.	• Check if there is sufficient time for the paraffin to liquefy completely until the basket arrives at the wax bath. • If this is not ensured, fill the wax bath with molten paraffin. • To override/quit the warning code, press Key and Start simultaneously.

10.2 Error codes

To indicate a series of malfunctions, the error codes E:01 to E:13 are displayed.

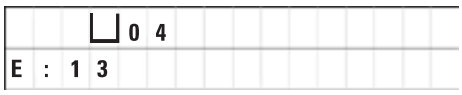

Three consecutive and very short sound signals that are repeated every 10 seconds reinforce the visual error code.

- To quit the error codes, press any key.

Note

On the next page you will find a complete list of all error messages, their meaning and how to troubleshoot them.

List of error codes

Code	Possible root cause	Troubleshooting
Error code "E:01"	Cache memory defective	Call Technical Service
Error code "E:03" – "E:04" – "E:05"	Drive malfunction	• Switch off the main switch and next switch it back on. Try again. • Call Technical Service
Error code "E:07"	Clock component defective	Call Technical Service
Error code "E:08" (Wax bath 1) **Error code "E:09" (Wax bath 2)** **Error code "E:10" (Wax bath 3)**	• Wax bath not connected. • Excess temperature switch-off mechanism has responded. • Wax bath defective. • Control unit defective.	• Connect wax bath. • Disconnect the wax bath connection plug from the socket at the rear of the instrument. Let wax bath cool down. Reconnect wax bath. If the yellow pilot lamp lights, use of the wax bath may be continued. • Exchange wax bath. • Call Technical Service
Error code "E:11"	Loss of process data.	• Acknowledge the error message by pressing any key; **ABORT** message, the process is canceled. • Restart processing cycle. • If the same problem recurs, call Technical Service.
Error code "E:12"	Loss of program settings.	• Acknowledge the error message by pressing any key; **ABORT** message, the process is canceled. • Restart processing cycle. • If the same problem recurs, call Technical Service.
Error code "E:13"	Erroneous data entry for delayed start function (e.g. desired starting time would be earlier than current real time.)	• Correct erroneous data entry.

10.3 "POWER FAILURE" and "WRONG STATION" messages

POWER FAILURE is displayed when power is restored after a power failure, but only if the processing cycle in progress has been impaired by the power failure.

The display reading is accompanied by a sound signal which intends to attract the user's attention to the malfunction so he/she can take appropriate measures to rescue the specimens.

The upper line of the display shows the surplus time the basket remained immersed, and the station number where it was immersed due to the power failure. In the example shown here the infiltration time in station no. 3 was exceeded by 47 minutes.

Note

In case of a power failure the carousel is lowered immediately into the station where the tissue basket happens to be located when the power failure occurs. Once the power is restored, processing will be resumed as programmed. Possible impairment of the processing cycle through the interruption is displayed.

If, due to the power failure, the basket is lowered into a station which is not part of the program (programmed infiltration time "0 h 00 min"), instead of **POWER FAILURE** the message **WRONG STATION** is displayed. In addition, when the power is restored, an uninterrupted sound signal is emitted.

The upper line of the display shows how long the basket remained in the wrong station due to the power failure. In the example shown here, the basket was in station 4 for 16 minutes.

By pressing any key the display reading will switch back to normal and the sound signal will be turned off.

Once the power is restored, processing will be resumed as programmed. The basket will be moved from the wrong station to the next station that is part of the current program.

10.4 Measures to remove specimen material in case of prolonged power failure

Note

In case of a prolonged power failure the tissue can be removed from the instrument manually and also be relocated to the next station by entirely manual operation.

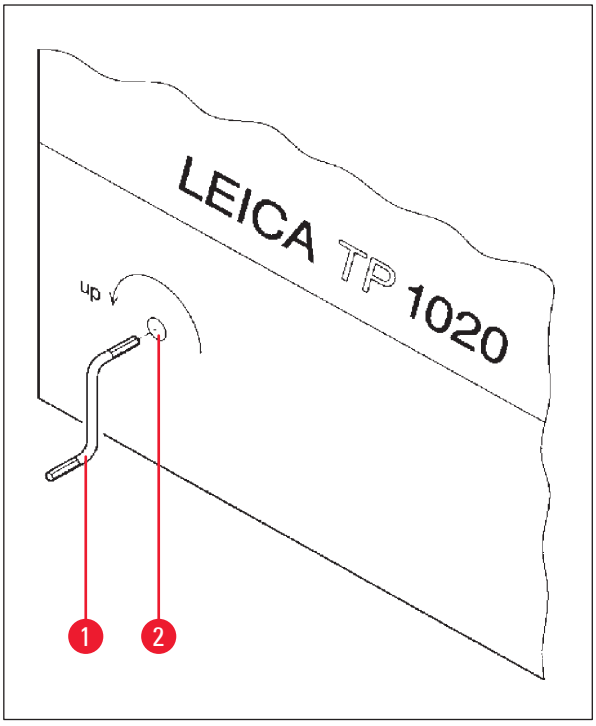

Fig. 24

- Switch the instrument off at the main power switch.
- Remove the crank handle (→ Fig. 24-1) from the clip and insert it into the access port (→ Fig. 24-2) on the left side of the instrument.

Removing the tissue basket

- Lift the carousel rotating the crank handle (→ Fig. 24-1) in the direction of the arrow until the lower end of the basket is above the rim of the processing station.
- Hang on to the crank handle to keep it securely in its position and remove the tissue basket.

Warning

Use caution when lowering the carousel! Keep your fingers out of the space between the container lid and the upper rim of the container!

When you release the crank handle, the carousel will start to slowly descend.

Manual relocation to the next station

- Rotating the crank handle in the direction of the arrow, lift the carousel upwards until there is a notable resistance to the rotating movement.

When you release the crank handle, the carousel will be lowered into the next processing station.

Skipping stations

To skip one or more processing stations, hold on to the crank handle to avoid that the basket will actually be lowered into the station.

- Next, lift the carousel again with the crank handle until you notice resistance to the rotating movement.
- To lower the basket into the station, release the crank handle.

When using the manual transporting option, infiltration times for all stations have to be user-controlled.

- To resume processing once the power has been restored, turn on the power switch.

After the power is restored, the software recognizes any manual station changes that have occurred during the power failure. When the power is back, the program is resumed as originally set up.

10.5 "ABORT" message

ABORT is displayed after quitting an error code emitted due to instrument malfunction. When confirming such an error message processing is aborted.

At this point processing can be restarted from the beginning. To skip the stations that had already been covered during the previous aborted run proceed as follows:

- Press **Start**.

- To start the currently displayed program, press **Start** again.

This will cause the instrument to step by step move the basket to the programmed starting station. Before reaching that position:

- Press **Pause/Cont** to switch to the manual processing mode.

- Press **Circle Arrow** to move the basket to the station where processing was aborted.

- Press **Arrow Down** to lower the basket.

- To leave the manual processing mode, press **Pause/Cont** again.

Processing will then continue where it had previously been aborted.

11. Cleaning

- Lift the carousel in the manual processing mode.
- Remove all station containers from the platform.

Warning

Spilled reagents have to be wiped away immediately. In case of long-term exposure, the instrument surfaces are only conditionally resistant to solvents.

The interior containers of the wax baths become very hot when the heating function is activated! Do not touch the gray upper rim of the containers with your hands! Burn hazard!

Caution when handling hot paraffin! Burn hazard!

- Disconnect the wax bath plugs, slightly lift the wax bath lids and remove the paraffin containers.

Warning

Empty the wax baths completely before the paraffin cools!

When cooling down, the paraffin contracts, which can cause damage to the wax bath.

- Lower the carousel in the manual processing mode.

Warning

Turn off the power switch before cleaning the instrument.

To clean the painted surfaces, the container platform and the control panel, do not use solvents containing acetone or xylene; neither use abrasive cleaning powders!

Only mild household detergents may be used! The lacquered surfaces and the control panel are not resistant to xylene or acetone!

- Remove residual paraffin from the station holders, lid seals and lid holders.
- Use a soft plastic spatula for removing the paraffin.

Warning

When cleaning the instrument, no liquid may enter in contact with any of the electrical connections or the interior of the instrument.

- Use a moist cleaning cloth to clean platform, lacquered instrument surfaces and control panel.
- Clean the rims of the glass or aluminum reagent containers and of the wax baths.

Note

The glass containers are dishwasher-safe.
Never clean the aluminum containers in an automatic dishwasher.

- Take the glass containers out of the beaker carriers and wash them in the dishwasher.
- Clean the aluminum containers by hand with mild household detergents.
- Fill the wax baths and reagent containers and put them back into place.
- Reconnect the wax bath plugs.
- Turn on the power switch.

Cleaning the Plexiglas fume containment shields of instruments with fume control system

- Use a soft plastic spatula for removing residual paraffin from the surface of the shields to avoid scratches.
- Apply some alcohol or xylene on a cloth and wipe off the surfaces previously cleaned with the plastic spatula.
  Do not allow xylene or alcohol to react on the surfaces!

12. Maintenance

12.1 General maintenance instructions

Warning

Only Leica service technicians are authorized to open the instrument for maintenance and repair work.

Overall, the instrument can be considered maintenance-free. To ensure its trouble-free functioning over a prolonged period of time, we still recommend:

- Have a preventive maintenance done once a year by a service engineer authorized by Leica.
- Enter into a service contract at the end of the warranty period. For details please contact your local Leica Service Organization.
- Mop up spilled reagents immediately.
- Clean the instrument on a daily basis, see (→ p. 64 – 11. Cleaning).
- Once a month, lift the carousel cover to its upper end position, clean the carousel axle with a cleaning cloth and subsequently apply a thin coat of machine oil.
- Never attempt any repairs on the instrument of wax baths on your own – by doing so you will loose any warranty claims!

12.2 Wax bath

12.2.1 Altering the standard working temperature

Note

Factory-set standard working temperature is 65 °C. Wax bath heating will automatically switch on when the actual temperature of the paraffin is 5 °C below set working temperature.

When working with paraffin that has a melting point below 58 °C, the instrument working temperature can be readjusted with the corresponding setting screw.

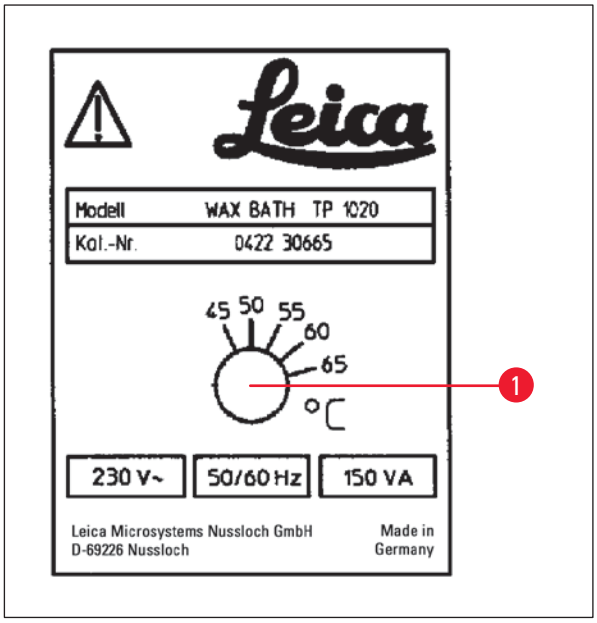

Fig. 25

- Use a screw driver to turn the setting screw (→ Fig. 25-1) to the desired value.

If you find that the paraffin does not melt completely after lowering the working temperature, slightly readjust again.

12.2.2 Reset after excess temperature shutdown

Note

If the actual temperature rises above the range of normal working temperature, an excess temperature switch-off mechanism responds. The wax bath heating is disconnected. The yellow signal lamp is extinguished. Use of the wax bath can be resumed only after a cooling down period. For cooling down, disconnect the wax bath connector plug from the socket at the rear of the instrument, or switch off the main switch.

- Disconnect the wax bath connector plug from the socket at the rear of the instrument.
- Wait for the wax bath to cool.

Warning

Empty the wax baths completely before the paraffin cools!

When cooling down, the paraffin contracts, which can cause damage to the wax bath.

Operational test

- Plug the wax bath back in.
- Check whether the yellow pilot lamp lights when heating is activated.
- Wait until the paraffin is completely molten. The set standard working temperature has been reached when the pilot lamp goes out.
- Measure if the actual temperature of the paraffin corresponds to the standard working temperature.

If there is any doubt whether the wax bath is functioning trouble-free, it has to be exchanged.

12.3 Replacing the fuses

Warning

Turn the instrument off and disconnect the power plug before replacing the fuses! Burnt-out fuses may only be replaced by fuses of the same type and specification.

See (→ p. 14 – 3.1 Technical data).

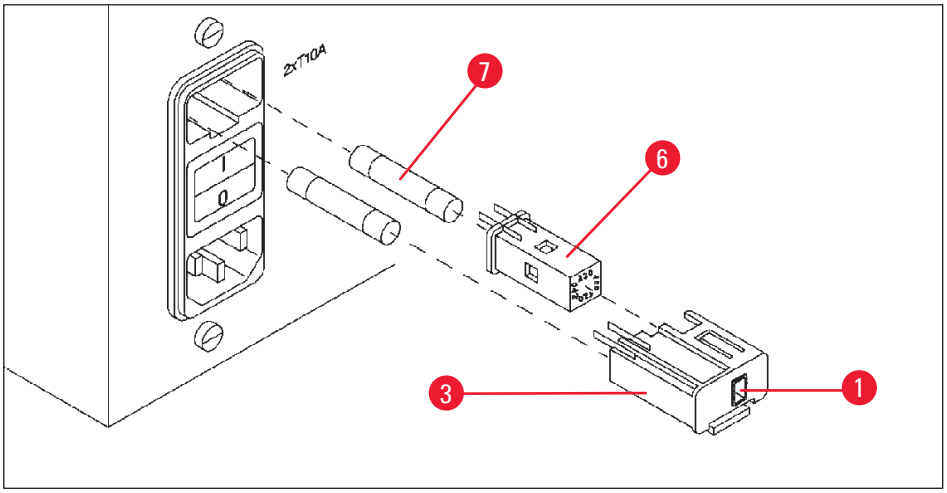

Fig. 26

The fuses are located in the voltage selector shell (→ Fig. 26-3).

- Remove the shell (→ Fig. 26-3) as described in chapter (→ p. 31 – 4.3.2 Adjusting the voltage selector).
- Remove the fuses (→ Fig. 26-7).
- Insert replacement fuses of the same type.

The currently selected voltage can be seen in the small window (→ Fig. 26-1) in the voltage selector shell.

- Insert the voltage selector shell together with the fuses back into the receptacle in the instrument and press lightly until it locks.
- Check if the setting that shows in the window (→ Fig. 26-1) corresponds to the nominal voltage in your laboratory.

13. Optional accessories

13.1 Three-level tissue basket

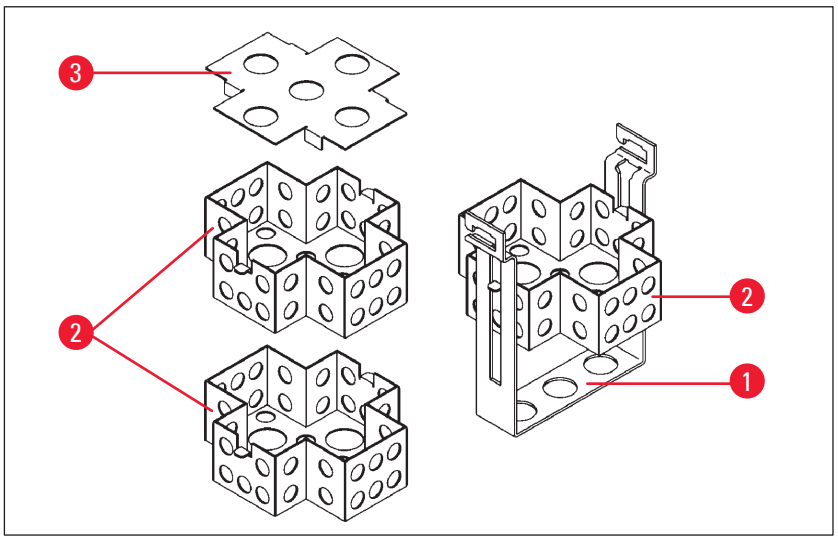

Fig. 27

Holding capacity: 20 cassettes per level

The three-level tissue basket consists of a holder (→ Fig. 27-1) in which the three levels (→ Fig. 27-2) for the cassettes are stacked. The upper level is closed with a lid (→ Fig. 27-3).

13.2 Basket removal device

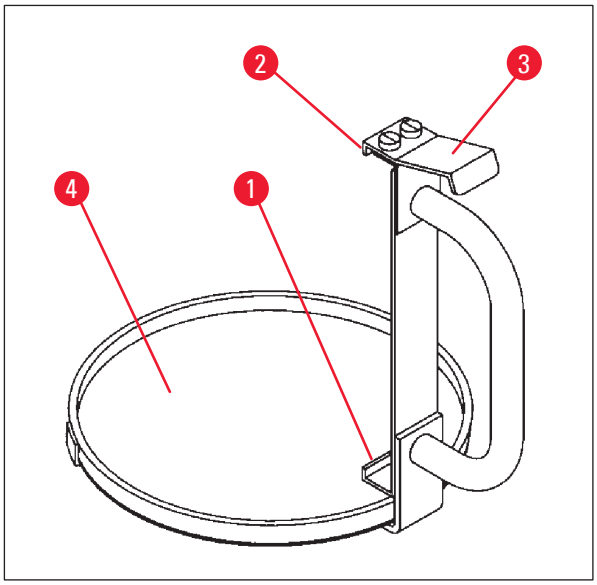

Fig. 28

The basket removal device with drip tray makes it easy to remove the hot dripping tissue basket at the end of the processing cycle. The rubber insert (→ Fig. 28-4) of the drip tray can be removed for cleaning.

- Grasp the basket removal device at the black handle and insert the dripping tray under the tissue basket.
- Insert the metal hook (→ Fig. 28-1) under the notch at the bottom of the tissue basket.
- To lift the hook (→ Fig. 28-2), press the spring (→ Fig. 28-3) downwards with your thumb.
- Lock the hook (→ Fig. 28-2) into the upper rim of the tissue basket and release the spring.
- Lift the basket slightly and remove it from the basket holder in a horizontal movement.

13.3 Basket holder for second tissue basket

Note

To increase the specimen throughput the instrument can be retrofitted with a basket holder for a second tissue basket.

A second tissue basket (standard or three-level type) has to be ordered separately.

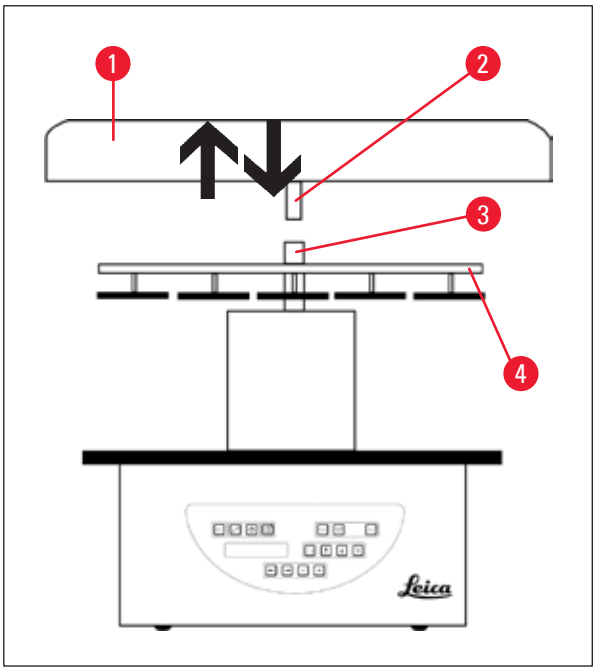

Fig. 29

Standard delivery

1	Basket holder for second tissue basket
1	Wax bath
1	Station holder for wax bath

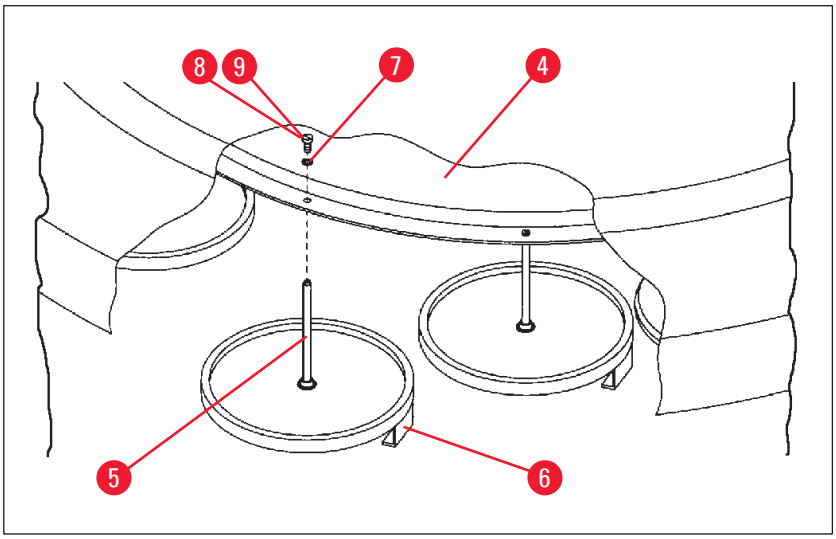

Fig. 30

Installing the second basket holder

- Rotate the carousel cover (→ Fig. 29-1) counterclockwise until it can be removed from the axle (→ Fig. 29-3) in an upward movement.

The second basket holder is installed at position 2. For this purpose, the existing cover and bar must be removed.

- Clutch the rod (→ Fig. 30-5) with a pair of tongs and release the slotted screw (→ Fig. 30-8) on the upper side of the disc (→ Fig. 30-4).
- Insert the rod (→ Fig. 30-5) of the second basket holder in the bore on the bottom of the disc (→ Fig. 30-4). Adjust the holding device (→ Fig. 30-6) for the second basket in the same way as the holding device in position 1 and hold it in that position.
- Put the locking washer (→ Fig. 30-7) around the bore in disc (→ Fig. 30-4).
- Insert the Allen screw (→ Fig. 30-9) into the bore from above and tighten with an Allen key no. 3.
- Insert the hub (→ Fig. 29-2) of the carousel cover (→ Fig. 29-1) from above into the axle (→ Fig. 29-3) of the center piece.
- To secure hold on to the disc (→ Fig. 29-4) and rotate the carousel cover clockwise.

Note

The instrument standard configuration will then have to be changed accordingly to acknowledge that a third wax bath has been connected, see (→ p. 75 – 15.1 Modifying the instrument configuration).

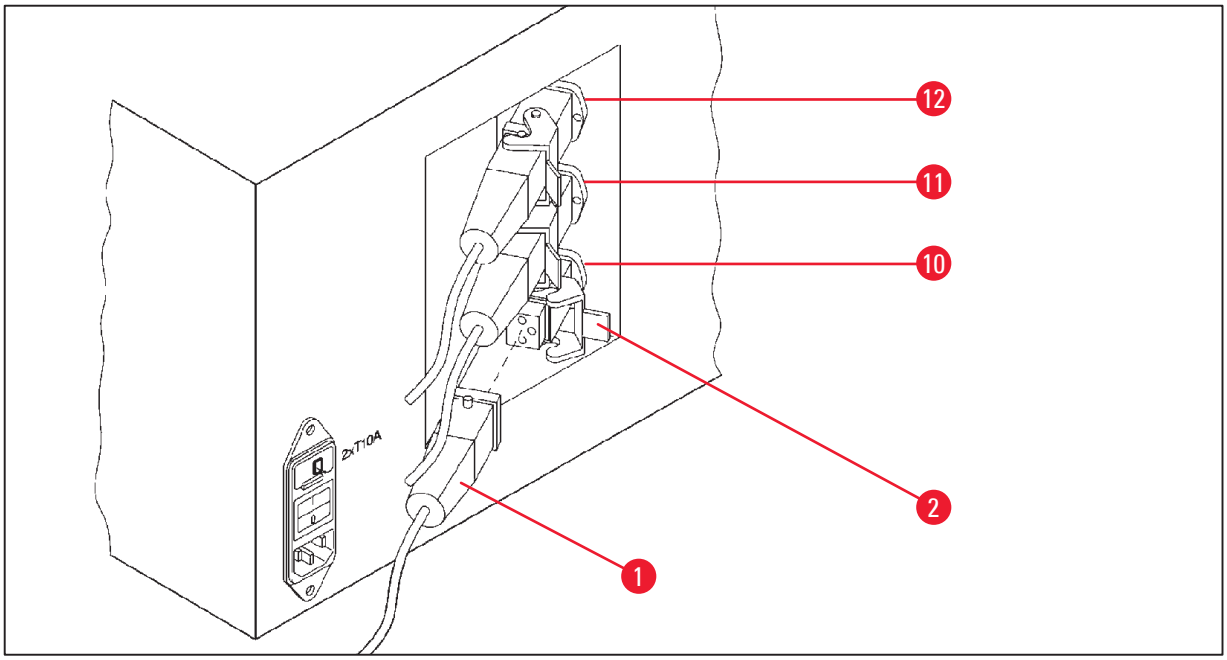

Fig. 31

Installing the station holder

- Use a screw driver to lift the reagent station holder out of the platform.
- Insert the wax bath holder and drive in with a plastic hammer.

Connecting the third wax bath

- Pull off the cover cap from the socket no. 10.
- Insert the plug (→ Fig. 31-1) of the third wax bath into socket no. 10 and secure with the clip (→ Fig. 31-2) .

13.4 Connecting the fume outlet tube (optional accessory for instruments with fume control system)

Note

Via a solvent resistant fume outlet tube (which is available in a length of 2 or 4 meters), the instrument can be connected to a central fume extraction system. The fume outlet tube can also be used to conduct solvent fumes outside a building.

Installing the fume outlet tube

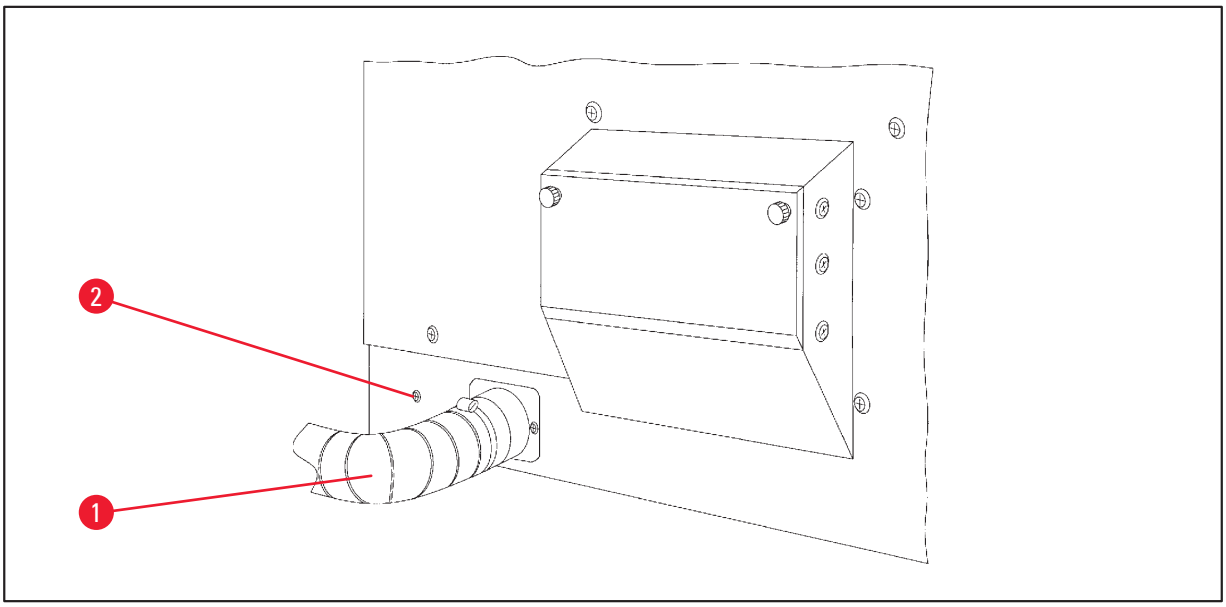

Fig. 32

- Put the tube (→ Fig. 32-1) over the connecting piece on the left side of the housing and fasten by means of the hose clamp (→ Fig. 32-2) that is supplied with the instrument.

13.5 Inserting the activated carbon filters (optional on instruments with fume control system)

Note

Instruments with fume control system can be equipped with two activated carbon filters.

One filter is specific to formaldehyde, whilst the other takes up other solvents. The working life of the activated carbon filters is dependent on the reagent concentrations actually used, instrument running time and ambient temperature.

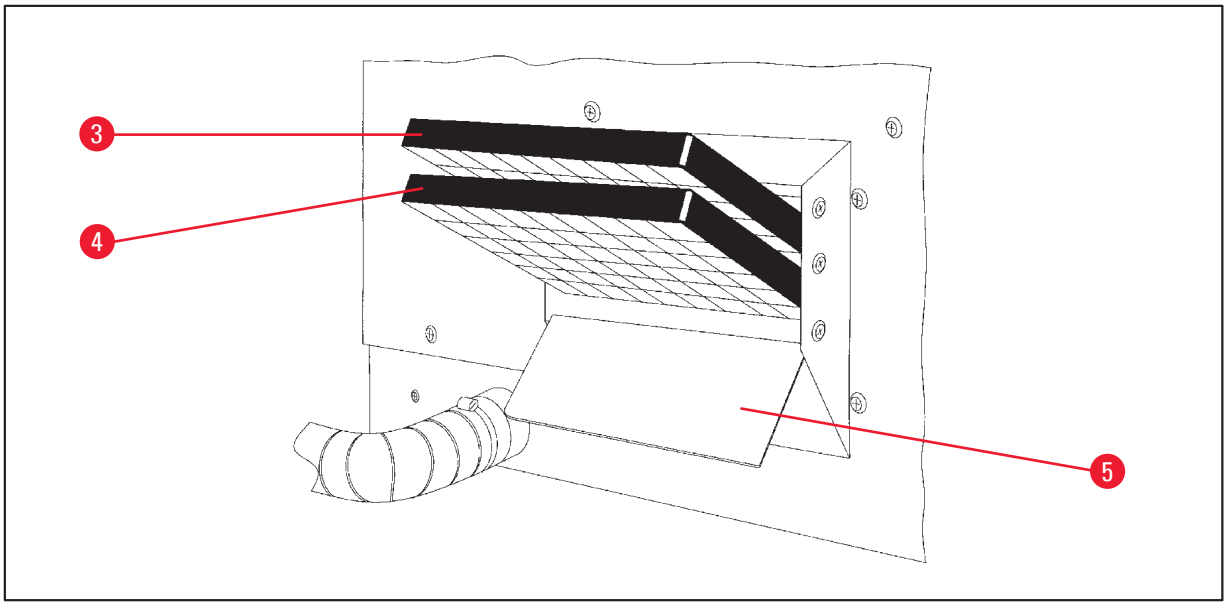

Fig. 33

- Unpack the filters.
- To open the lid (→ Fig. 33-5) of the receptacle on the left side of the instrument, loosen the two knurled knobs.
- Fold down the lid (→ Fig. 33-5).
- Insert the activated carbon filter for other solvents (→ Fig. 33-4) in the lower guide rail and push until it is completely inserted.
- Insert the activated carbon filter for formaldehyde (→ Fig. 33-3) in the upper guide rail and push until it is completely inserted.
- Fold up the lid and lock by tightening the two knurled knobs.

Warning

Fire hazard!

If a filter becomes saturated with solvent, there is a potential fire risk! It is important that the activated carbon filters are changed at factory recommended intervals.

Generally the activated carbon filters have to be replaced every four months.

14. Ordering Information

14.1 Accessories

Qty.	Designation	Order No.
1	Standard tissue basket	14 0422 30585
1	Three-level tissue basket	14 0422 30547
1	Single-level compartment for three-level tissue basket	14 0422 30622
1	Lid for three-level tissue basket	14 0422 30623
1	Basket removal device with drip tray	14 0422 30637
1	Glass container, 1.8 l capacity	14 0424 60429
1	Beaker carrier	14 0422 30671
1	Aluminum container, 1.8 l capacity	14 0422 32166
1	Station holder for wax bath	14 0422 30571
1	Wax bath, 1.8 l	14 0422 30665
1	Wax bath (resistant to chloroform) 1.8 l, adjustable up to 70 °C	14 0422 32001
1	Screwdriver for wax bath	14 0170 10702
1	Fume outlet tube (solvent resistant) 2 m	14 0422 31974
1	Fume outlet tube (solvent resistant) 4 m	14 0422 31975

15. Appendix

15.1 Modifying the instrument configuration

The instrument has a factory-set standard configuration which can be modified by the user if desired.

Modifications can be done in the configuration menu, which consists of 4 different menu items:

- Signal level 1 - 4
- 3. wax bath?
- ProgPreset?
- SystemReset?

Editing the configuration menu

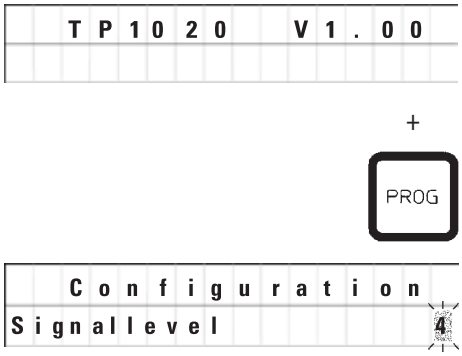

- Switch the instrument off at the main power switch.
- Turn the power switch back on. While the display still reads **TP1020 V x.xx** press **Prog** for a short while.

The first configuration menu item is displayed.

Note

For this menu item four different settings can be selected. Setting 4 is factory preset.
Setting 1 is the lowest level. The next higher level always contains all the parameters of the next preceding level plus the additional signals as listed on this page.

Modifying the configuration

Signal level	**=**	**Setting of the desired type and frequency of sound signal**
Level 1	=	Sound signal in case of power failure and malfunctions.
Level 2	=	Level 1 + sound signal in case of interruption, warning code and end of program.
Level 3	=	Level 2 + sound signal when confirming warning codes and error codes.
Level 4	=	Level 3 and sound signal every time a key is pressed.

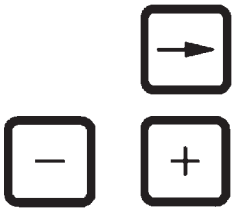

- For the next menu item, press the **Arrow Right** key.
- To change the setting, press the **Plus** or **Minus** keys.

```
  Configuration
3.wax bath?     YES
```

The next standard setting is displayed.

3. wax bath = do you wish to use a third wax bath?

Note

In station no. 10 you can install a third wax bath instead of the reagent station.

If you do so, you have to modify the configuration menu accordingly; otherwise the instrument will not function properly. If you change from a three wax baths operation mode back to two wax baths, you have to go back and readjust the configuration menu.

- To change the setting, press the Plus or Minus keys.

- For the next menu item, press the Arrow Right key.

```
  Configuration
ProgPreset?     NO
```

The next standard setting is displayed.

ProgPreset? = Set programs no. 6 - 9 to factory preselected standard values?

Standard setting is **NO**.

Note

Programs no. 6 - 9 come with a number of factory preset standard values; however these may be altered by the user.

- To change the setting, press the Plus key.

When answering **YES**, programs no. 6 - 9 are set to standard values and programs no. 1 - 5 are deleted.

- For the next menu item, press the Arrow Right key.

```
  Configuration
SystemReset?    YES
```

The next standard setting is displayed.

SystemReset? = Reset a number of settings to standard value

Standard setting is **NO**.

Note

A system reset will set real time to 0.00 and maximum heating time for the wax baths to 8 hours. The "Sound Signal Level" setting and the number of wax baths selected in the standard configuration menu will remain unaltered by a system reset.

- To change the setting, press the **Plus** key.

When answering **YES**, the system clock is set at 0:00 and the maximum heating time for the wax baths is set at 8 hours. No other settings are altered.

Leaving the configuration menu

- To leave the configuration menu, press **Prog**.

15.2 Reagents appropriate for use with the instrument

Warning

Important!
Using other than the reagents listed below can cause damage to the instrument or to parts of the instrument.

The following reagents are safe for use with the Leica TP1020:

Fixation	Formalin, buffered or unbuffered	
	Picric acid	
Dehydration	Ethanol	
	Isopropyl alcohol	
	Methanol	
	Butyl alcohol	
	Industrial alcohol	
Clearing	Xylene and xylene substitutes	
	Toluene	
	Benzene	
	Acetone	
	Chloroform Trichlorethane	Important! These substances are permitted only with instrument variant 9. For additional information, refer to chapter (→ p. 16 – 3.3 Standard delivery – packing list)
Paraffin	Paraffin	

15.3 Factory-set programs

Program no. 6 - 1 basket

Station	Reagent	V AC	Duration
1		V	0h15
2		V	0h15
3		V	0h15
4		V	0h15
5		V	0h15
6		V	0h15
7		V	0h15
8		V	0h15
9		V	0h15
10		V	0h15
11	Paraffin	V	0h15
12	Paraffin	V	0h15

Program no. 8 - 2 baskets

Station	Reagent	V AC	Duration
2		V	0h15
3		V	0h15
4		V	0h15
5		V	0h15
6		V	0h15
7		V	0h15
8		V	0h15
9		V	0h15
10		V	0h15
11	Paraffin	V	0h15
12	Paraffin	V	0h15

Program no. 7 - 1 basket

Station	Reagent	V AC	Duration
1		V	1h00
2		V	1h00
3		V	1h00
4		V	1h00
5		V	1h00
6		V	1h00
7		V	1h00
8		V	1h00
9		V	1h00
10		V	1h00
11	Paraffin	V	1h00
12	Paraffin	V	1h00

Program no. 9 - 2 basket

Station	Reagent	V AC	Duration
2		V	1h00
3		V	1h00
4		V	1h00
5		V	1h00
6		V	1h00
7		V	1h00
8		V	1h00
9		V	1h00
10		V	1h00
11	Paraffin	V	1h00
12	Paraffin	V	1h00

Leica TP1020 – Programming Worksheet

Program no. _____ Name: _____ Date: _____

Written by: _____

Station	Reagent	V AC		Duration	Notes
1					
2					
3					
4					
5					
6					
7					
8					
9					
10					
11	Paraffin				
12	Paraffin				

Leica TP1020 – Programming Worksheet

Program no. _____ Name: _____ Date: _____

Written by: _____

Station	Reagent	VAC		Duration	Notes
1					
2					
3					
4					
5					
6					
7					
8					
9					
10					
11	Paraffin				
12	Paraffin				

16. Warranty and Service

Warranty

Leica Biosystems Nussloch GmbH guarantees that the contractual product delivered has been subjected to a comprehensive quality control procedure based on the Leica in-house testing standards, and that the product is faultless and complies with all technical specifications and/or agreed characteristics warranted.

The scope of the warranty is based on the content of the concluded agreement. The warranty terms of your Leica sales organization or the organization from which you have purchased the contractual product shall apply exclusively.

Technical service information

If you are in need of technical customer support or spare parts, please contact your Leica representative or the Leica dealer where you purchased the instrument.

Please provide the following information:

- Model name and serial number of the instrument.
- Location of the instrument and name of a contact person.
- Reason for the service call.
- Delivery date.

Decommissioning and disposal

The instrument or parts of the instrument must be disposed of in compliance with the local laws.

17. Decontamination Confirmation

Every product that is returned to Leica Biosystems or that requires on-site maintenance must be properly cleaned and decontaminated. You can find the dedicated template of the decontamination confirmation on our website www.LeicaBiosystems.com within the product menu. This template has to be used for gathering all required data.

When returning a product, a copy of the filled and signed confirmation has to be enclosed or passed on to the service technician. The responsibility for products that are sent back without this confirmation or with an incomplete confirmation lies with the sender. Returned goods that are considered to be a potential source of danger by the company will be sent back at the expense and risk of the sender.

www.LeicaBiosystems.com

Version 3.5, Revision M – 06.2021

Leica Biosystems Nussloch GmbH
Heidelberger Strasse 17 - 19
69226 Nussloch
Germany

Tel.: +49 - (0) 6224 - 143 0
Fax: +49 - (0) 6224 - 143 268
Web: www.LeicaBiosystems.com