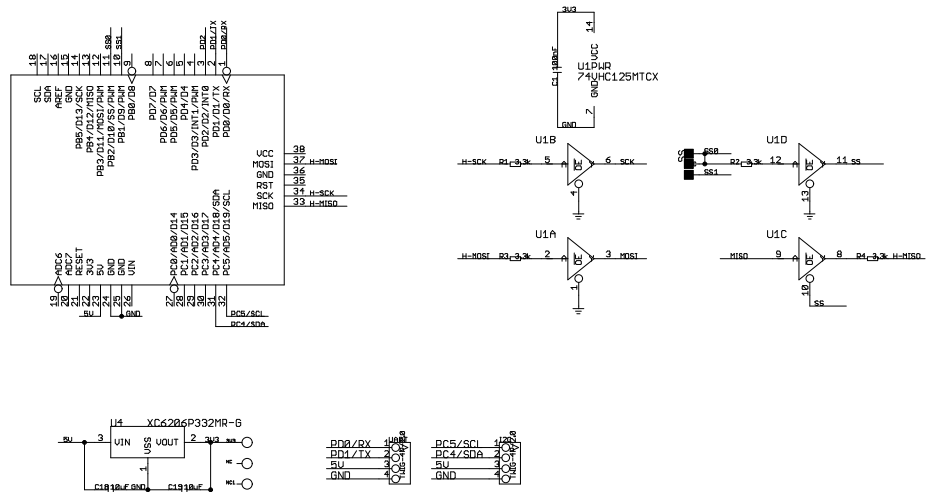
U1PWR
74VHC125MTCX
U1B
U1D
U1A
U1C
U4 XC6206P332MR-G
VIN
VOUT
VSS
PD0/RX
PD1/TX
5V
GND
PC5/SCL
PC4/SDA
H-SCK
H-MOSI
H-MISO
SCK
MOSI
MISO
SS
SS0
SS1
VCC
GND
RST
SCK
MISO
H-MOSI
H-SCK
H-MISO
PC5/SCL
PC4/SDA
SeeedStudio
TITLE: NFC Shield v2.1
Design:
Check:
Date: 14/7/11 ??10:20
Vision:
Sheet: 1/2

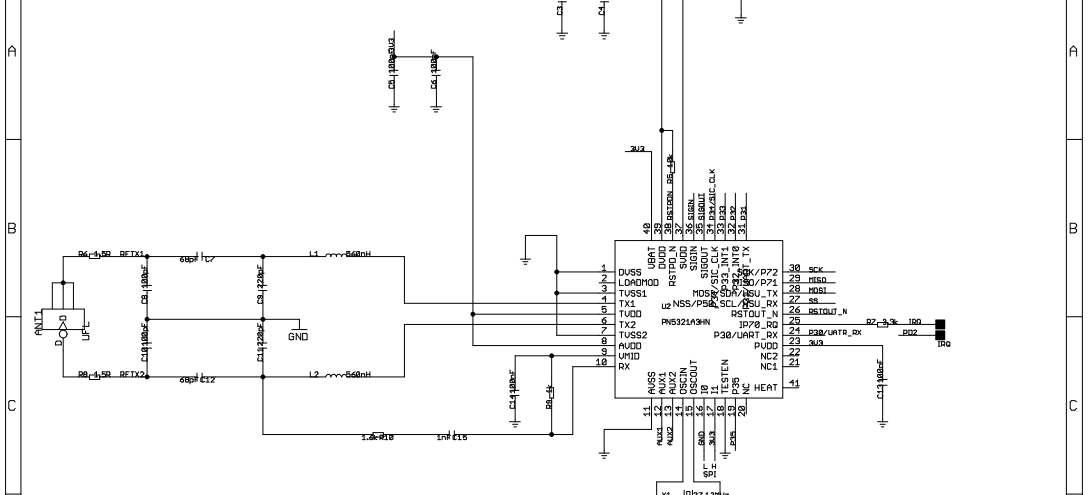
U2 NXS/PSA
PN532A3HN
ANT1
L1 560nH
L2 560nH
GND
DVSS
LDAOMOD
TVSS1
TX1
TVDD
TX2
TVSS2
AVDD
VMID
RX
VBAT
DOUT_N
RSTPD_N
SVDD
SIGIN
SIGOUT
VSS
SCL
MOSI
SCL/SSU_RX
RSTOUT_N
IP70_RQ
P30/UART_RX
PVDD
NC2
NC1
HEAT
P72/SCK
P71/MISO
P70/MOSI
P33/INT1
P32/INT0
P30/UART_TX
P30/UART_RX
RSTOUT_N
IRQ
SCK
MISO
MOSI
SS
X1
27.12MHz
SeeedStudio
TITLE: NFC Shield v2.1
Design:
Check:
Date: 14/7/11 ??10:20
Vision:
Sheet: 1/2