# Petersburg drafted three data center tests. Then it widened the freeze.

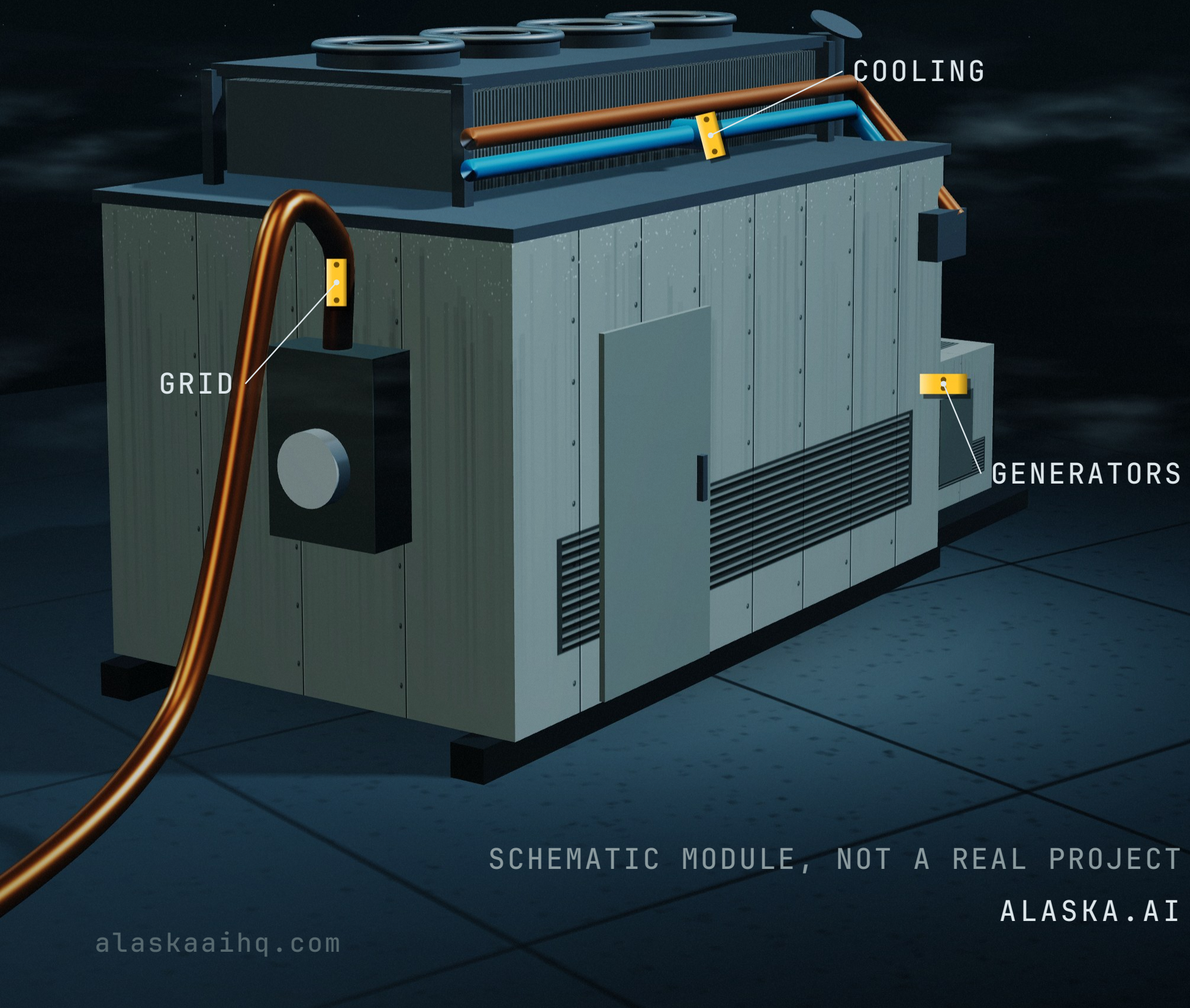


SCHEMATIC MODULE, NOT A REAL PROJECT

ALASKA.AI

# 5 to 2 to cover all data centers. Then 7 to 0.

The amendment would widen the freeze to every data center, on or off the grid, whatever its cooling. The Petersburg Pilot says it closes the opening left for Mazzella's 2-megawatt project. The final reading is scheduled for November 30th at 6 p.m.

AS REPORTED · REVISED TEXT NOT YET PUBLISHED

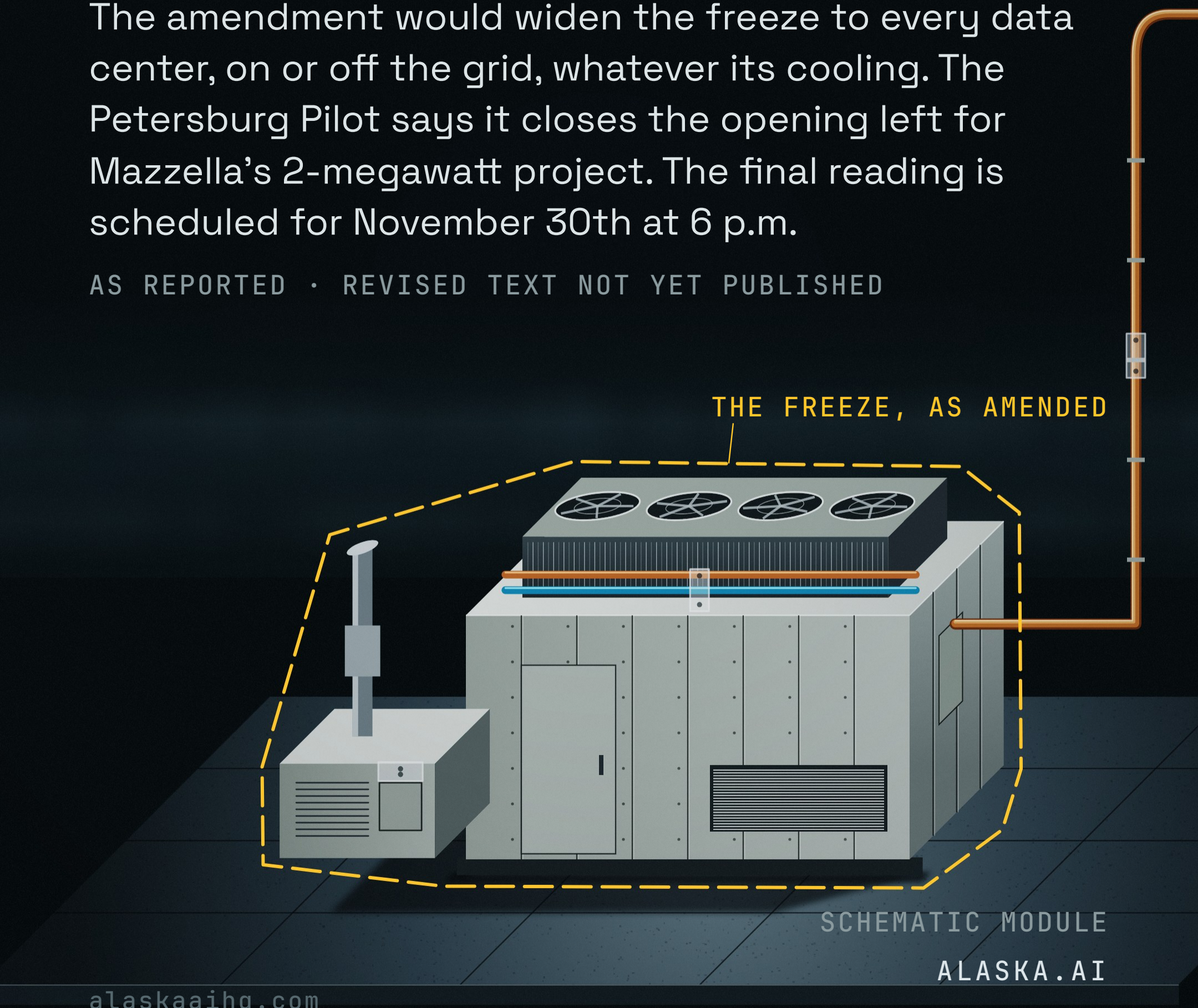

# The grid, in writing.

No permit unless Petersburg Municipal Power & Light found, in writing, that today's grid could fully supply the load.

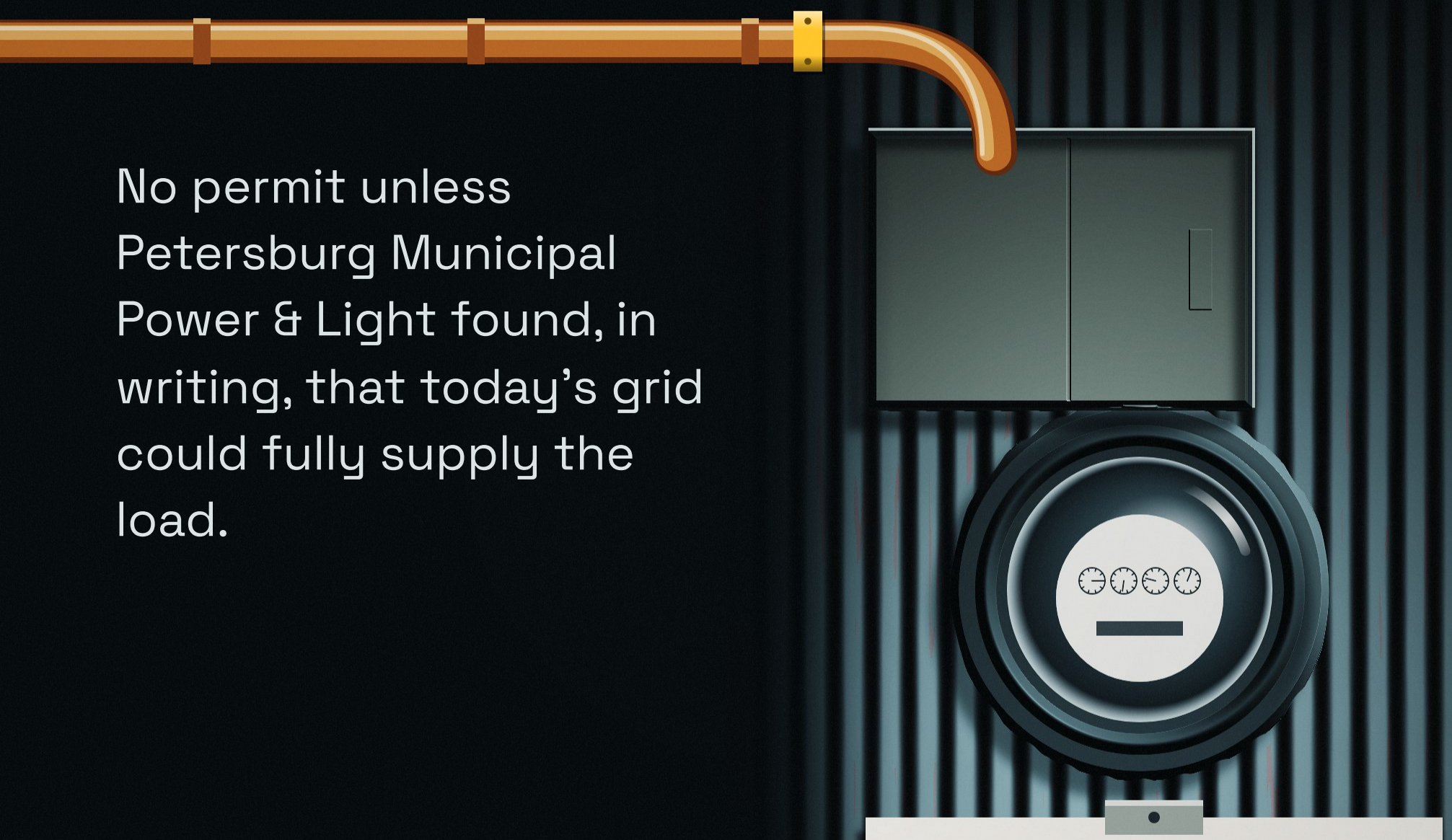


A NUMBER ONLY THE UTILITY CAN WRITE

# No generators for everyday power.

"none of us wants generators running 24/7, and that's the purpose of this ordinance"

STEVE HARBOUR, UTILITY DIRECTOR, WHO HELPED WRITE IT

Diesel, gas or any generator was barred as everyday power. Backup during a real outage, or a curtailment the utility directs, was allowed.

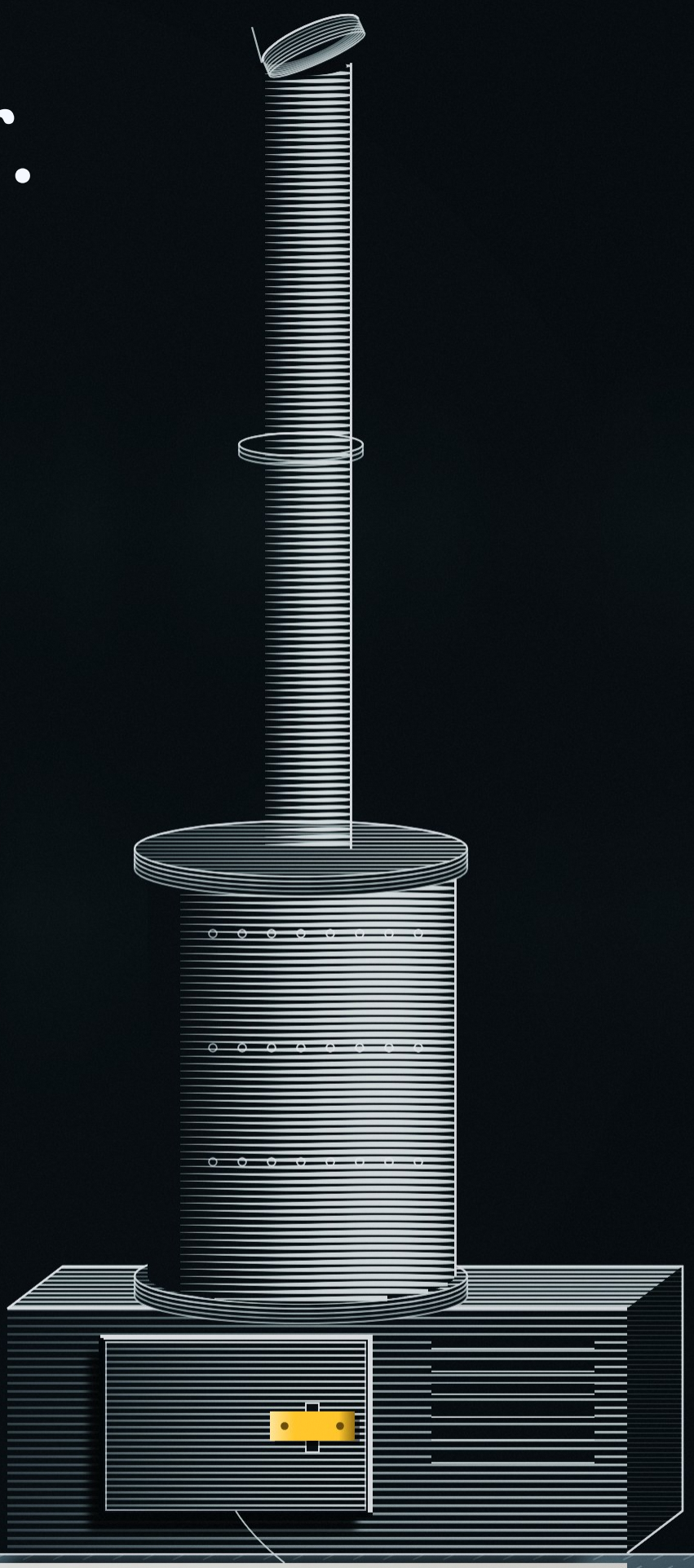

# Every drop of coolant stays in the loop.

100 percent of coolant and refrigerant circuits had to stay contained and keep recirculating. An Alaska-licensed engineer had to certify the cooling plans.



# As of mid-November, Petersburg had no data centers.

PER KFSK · THE TOWN RUNS ON HYDROPOWER, MOSTLY BOUGHT FROM SEAPA

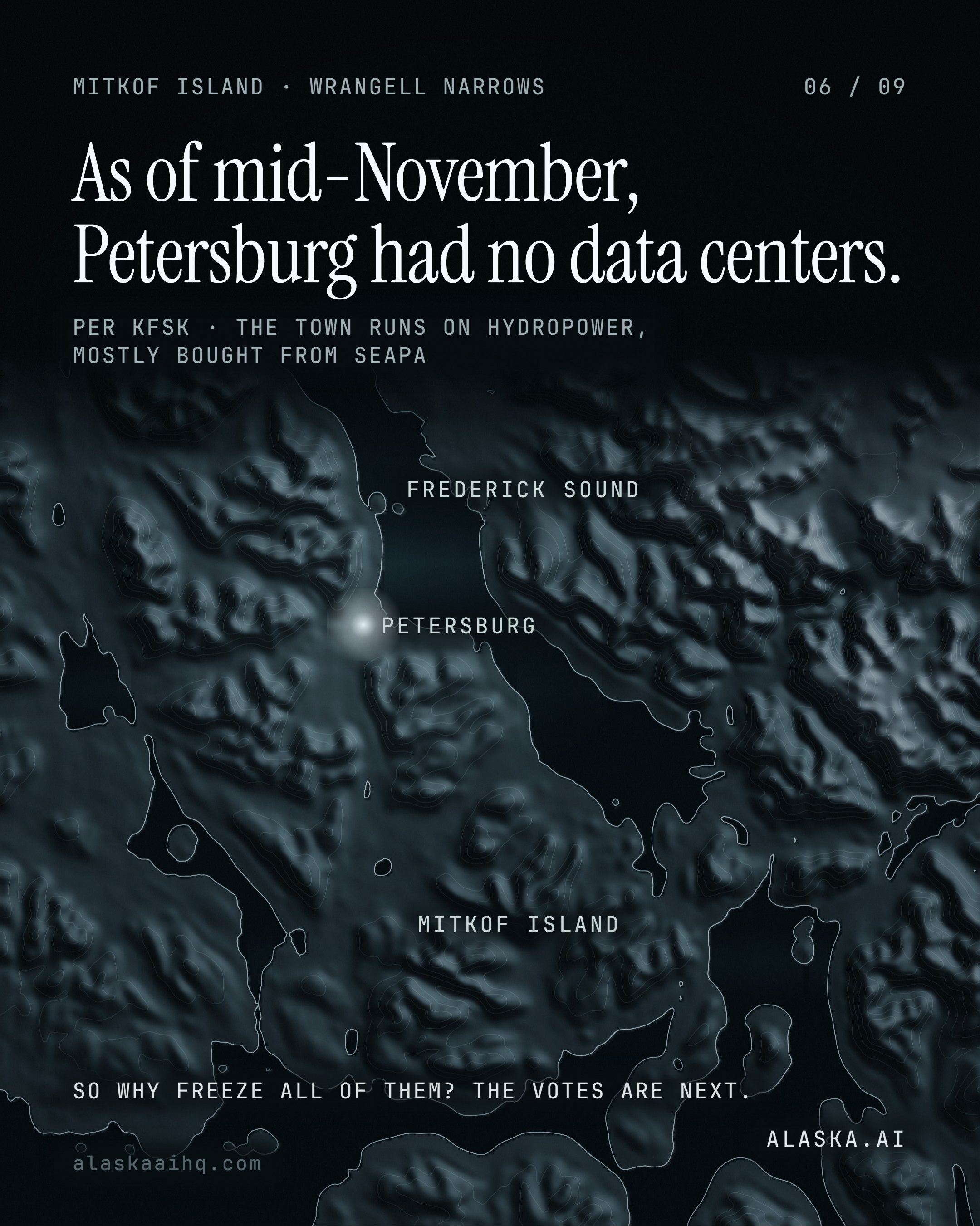


SO WHY FREEZE ALL OF THEM? THE VOTES ARE NEXT.

ALASKA.AI

# The same amendment tied, then passed.

"a real moratorium"

JEFF MEUCCI, WHO MOVED THE AMENDMENT

"a solution in search of a problem"

VICE MAYOR JEIGH STANTON GREGOR

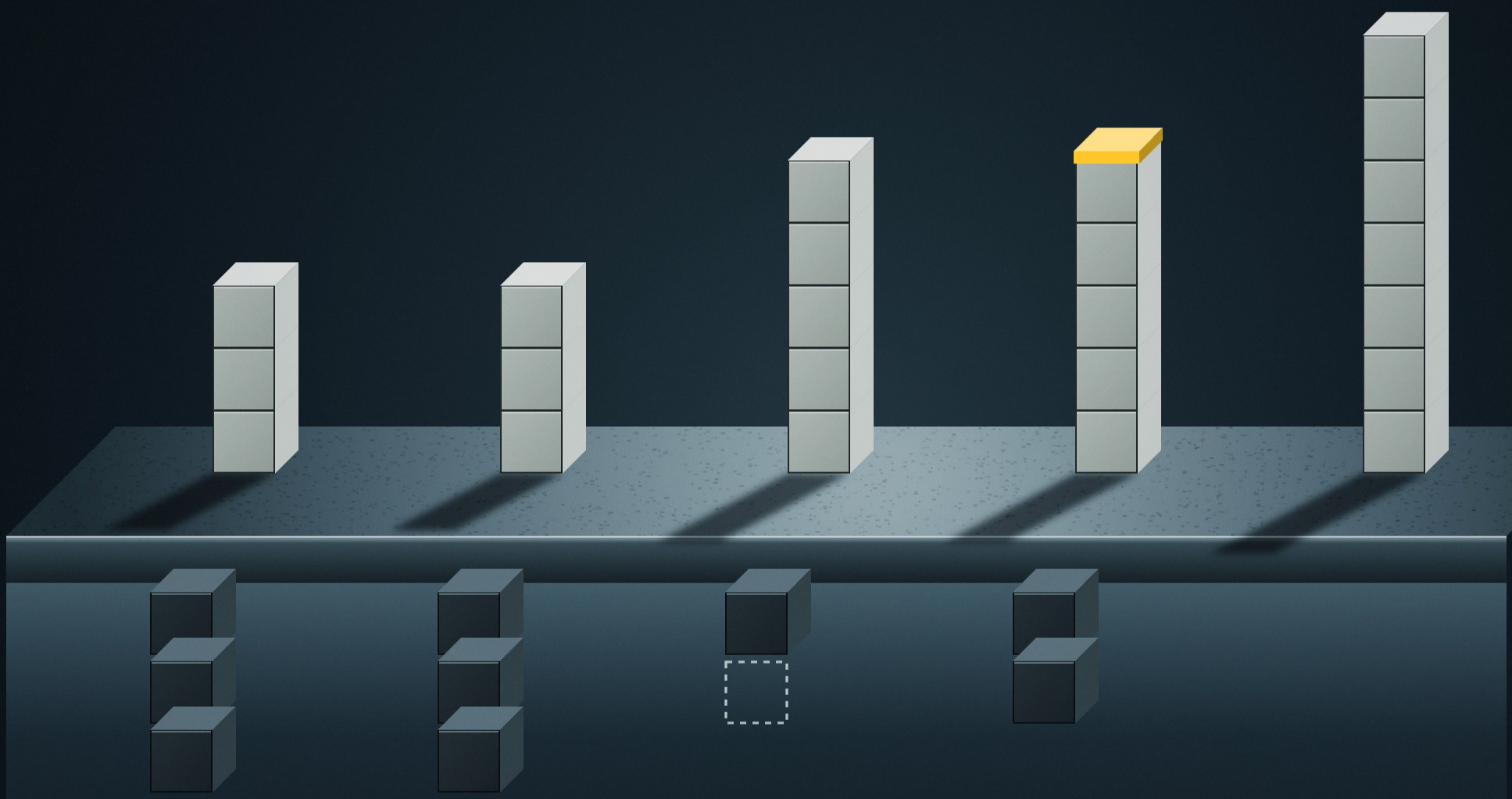


Mayor Bob Lynn and Stanton Gregor voted no on the amendment.

ALASKA.AI

# If it passes November 30th.

NOVEMBER 30TH, 6 P.M. · FINAL READING, WITH ANOTHER PUBLIC HEARING, SCHEDULED

ON ADOPTION · IN EFFECT, PENDING APPLICATIONS INCLUDED

PERMITS ISSUED BEFORE ADOPTION ARE NOT REVOKED

JUNE 21ST, 2027 · FINDINGS DUE TO THE ASSEMBLY

SEPTEMBER 30TH, 2027 · EXPIRES AT 11:59 P.M. UNLESS EXTENDED OR REPEALED

FAIRBANKS NORTH STAR BOROUGH · ITS OWN PAUSE VOTE EXPECTED AROUND JANUARY 14TH NEXT YEAR, PER MAYOR HOPKINS

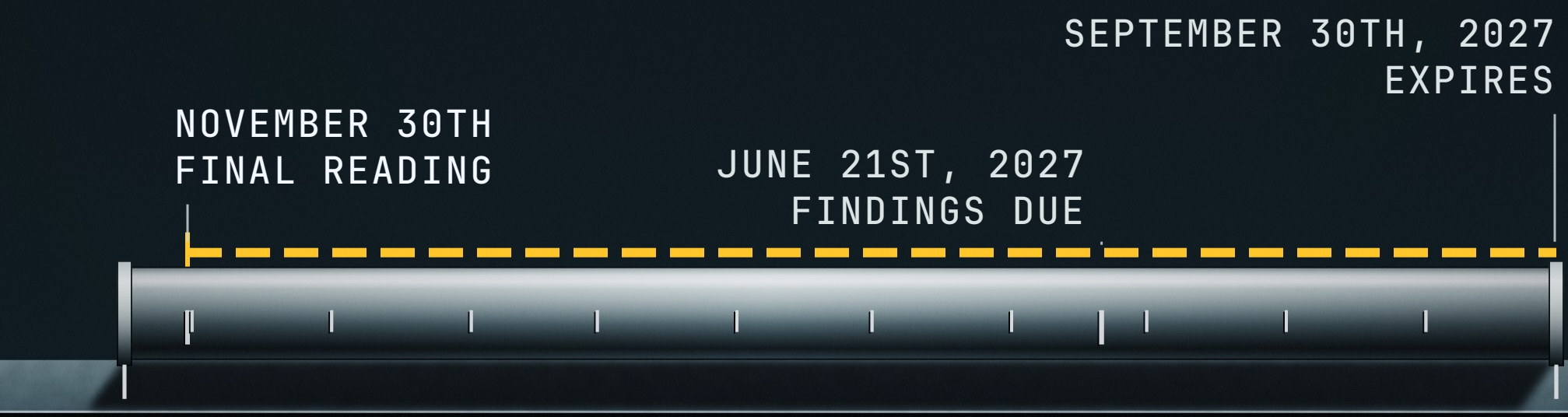

# Should the final text keep the three tests for when the freeze ends?

Answer in the comments.

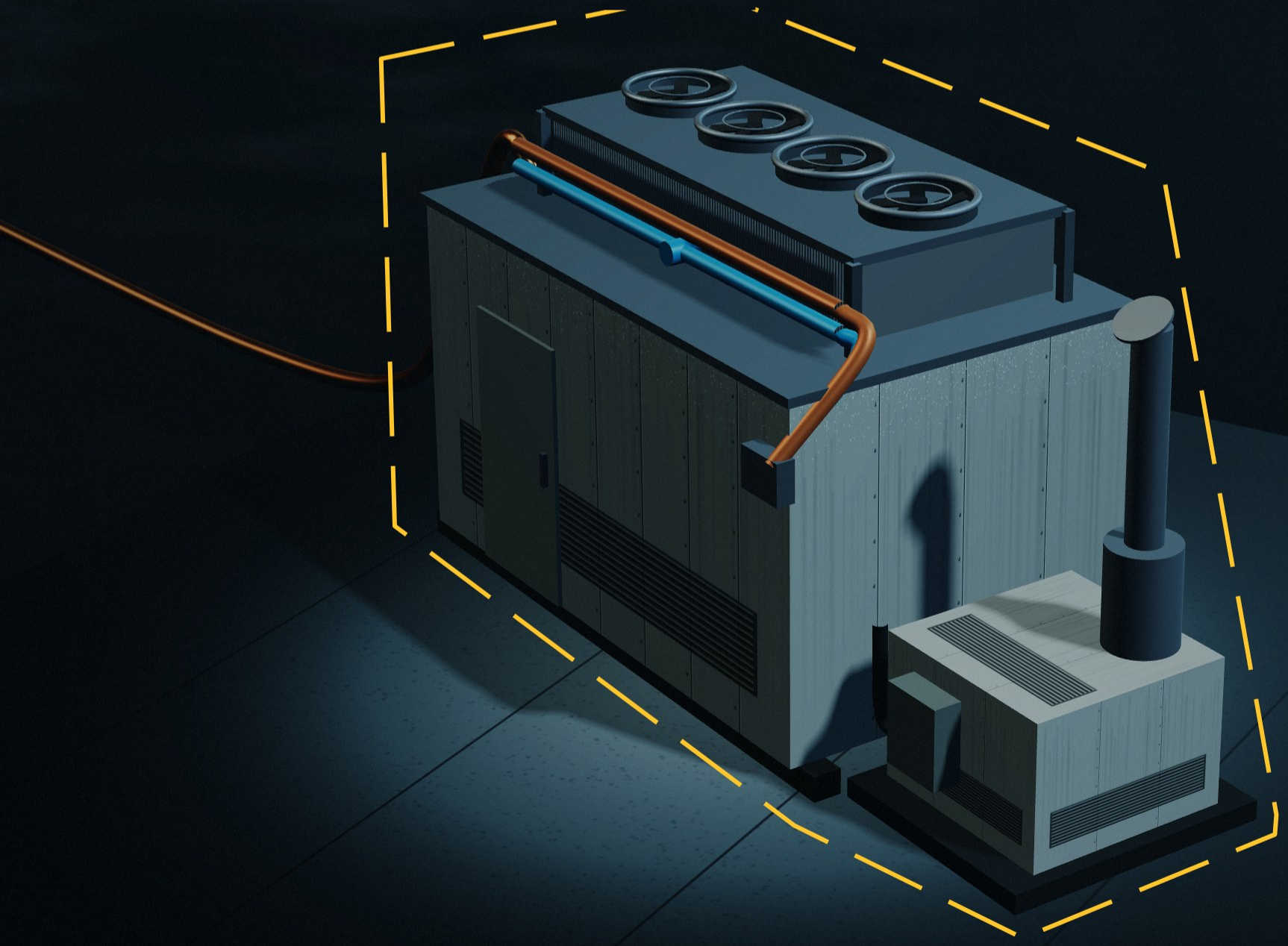

SCHEMATIC MODULE, NOT A REAL PROJECT