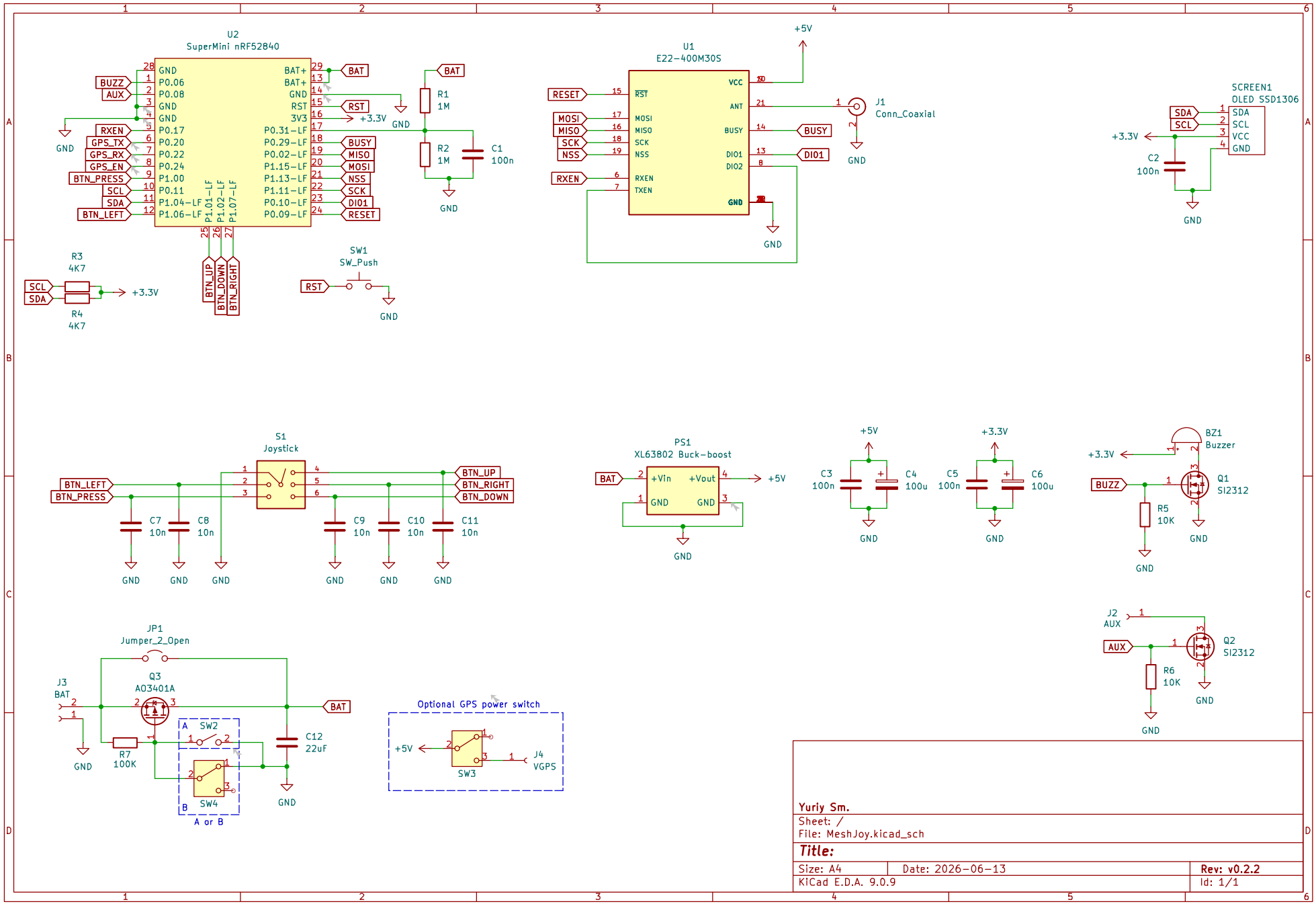

Yuriy Sm.

Sheet: /

File: MeshJoy.kicad_sch

Title:

Size: A4	Date: 2026-06-13	Rev: v0.2.2
KiCad E.D.A. 9.0.9		Id: 1/1