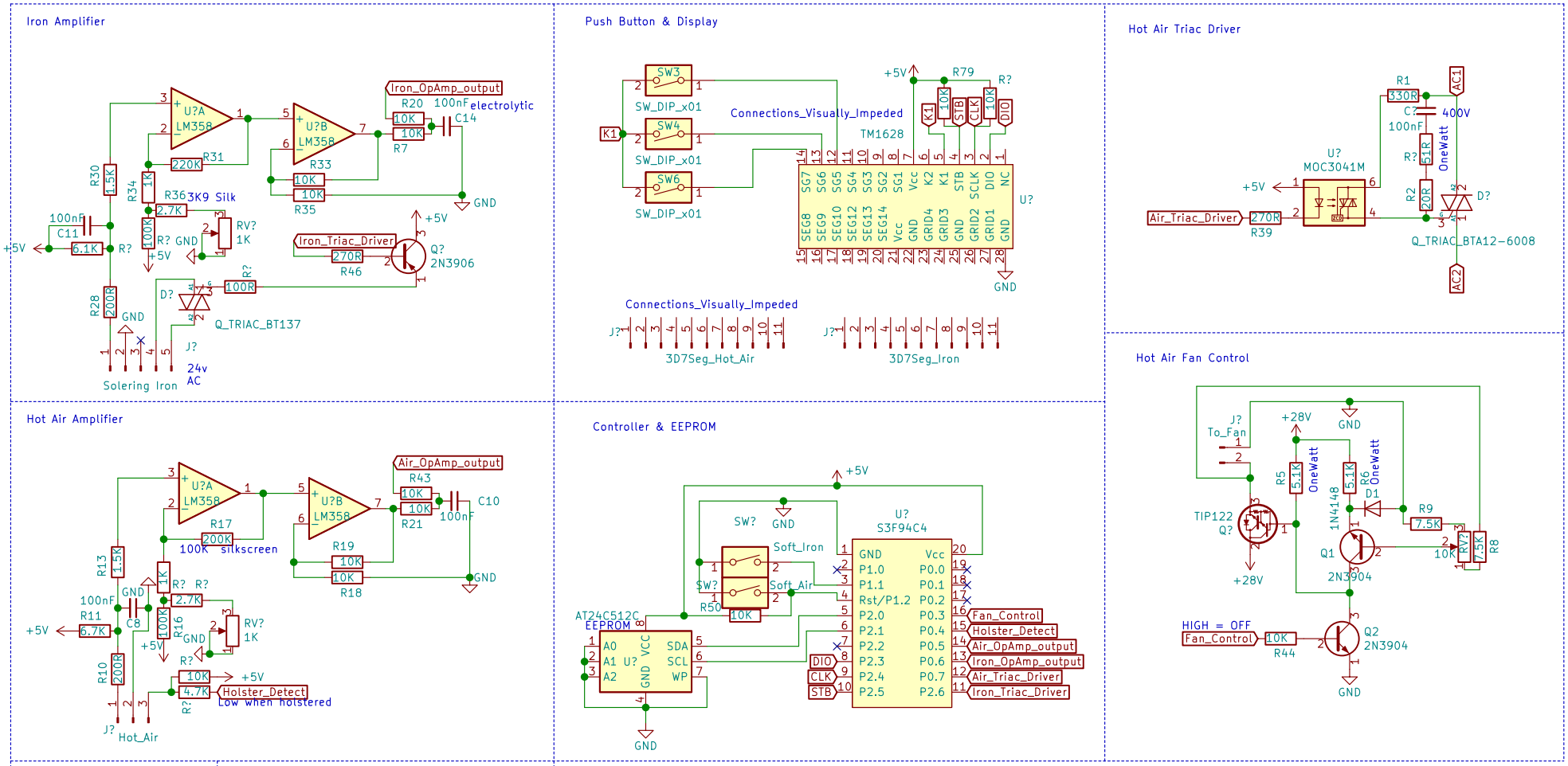

Alex Baruth

Sheet: /

File: 898d.sch

Title: Dual Hot Air Soldering Station 898D

Size: A4	Date: 2020-06-18	Rev: 1
KiCad E.D.A. kicad (5.1.5)-3		Id: 1/1