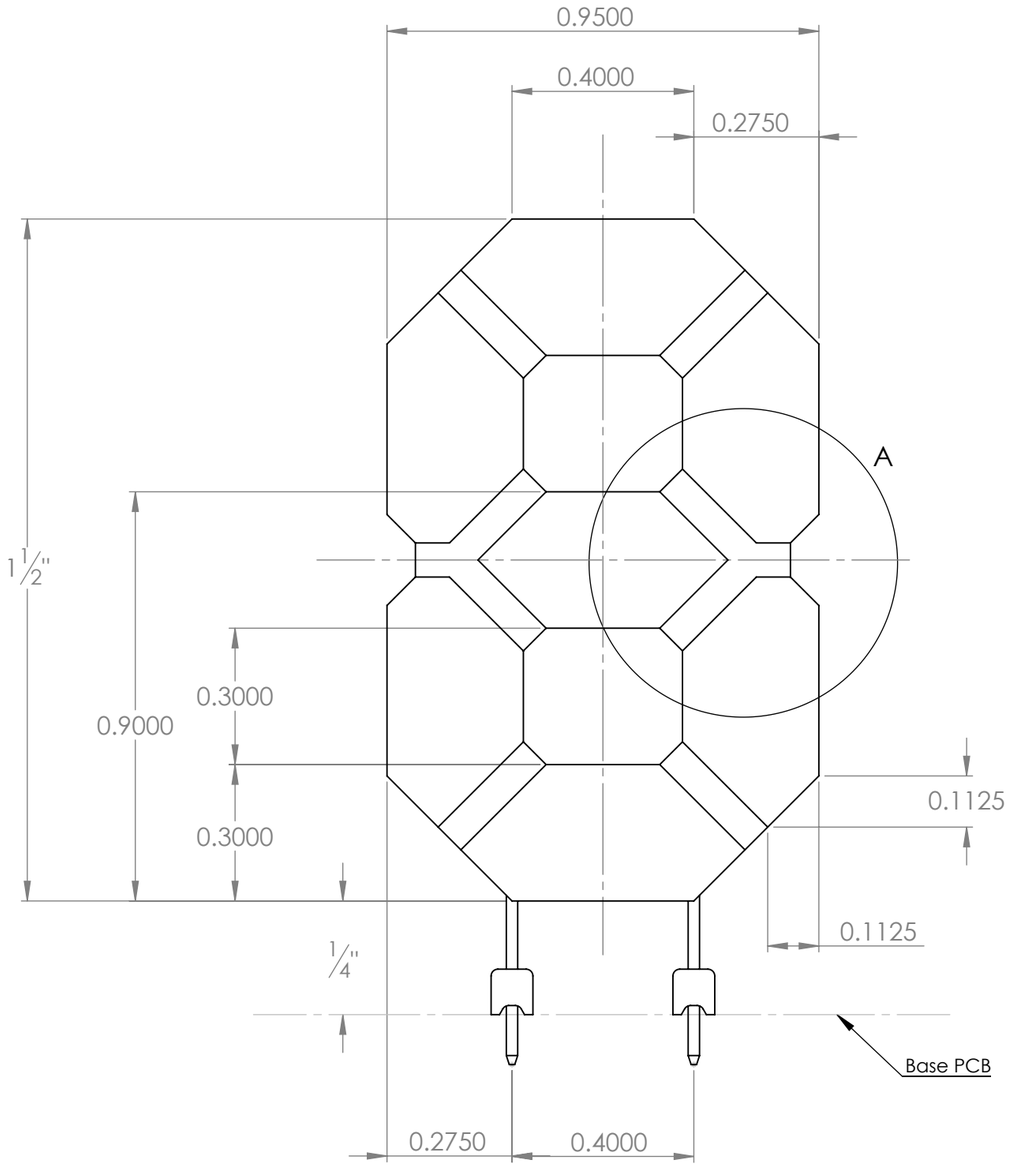

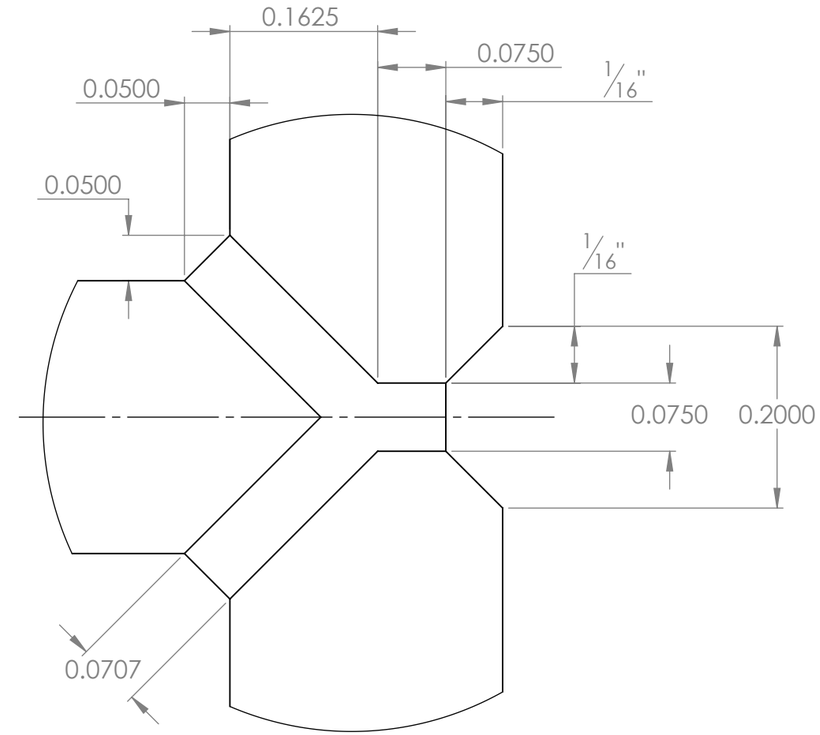

DETAIL A
SCALE 6 : 1

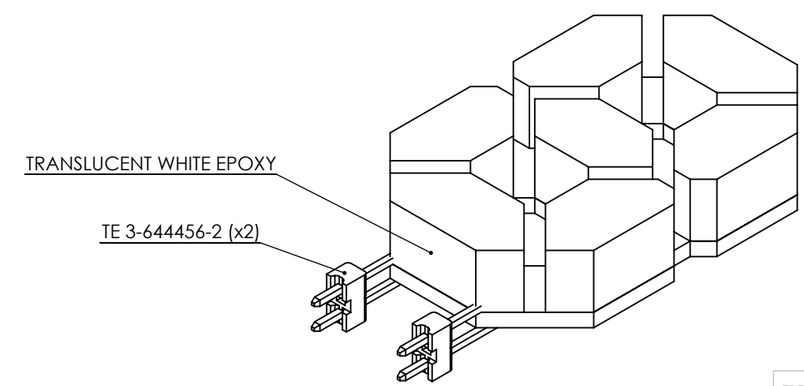

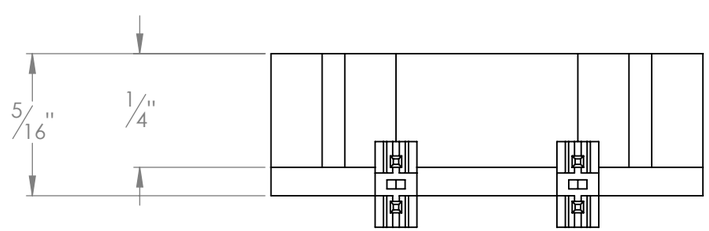

BENOIT FRIGON
BENOIT@FRIGON.INFO
WWW.BFRIGON.COM

NOTES :

EPOXY MIX:
25% CORNSTARCH, 75% CLEAR EPOXY

PROJECT: ALARM CLOCK			
TITLE: DISPLAY (MODEL B) - SEGMENT PCB ASSEMBLY DIMENSIONS			REV: A
PART #: CLK-AS-07	DOCUMENT #: CLK-DWG-26	UNITS: INCHES [MM]	SIZE: B
MATERIAL: --		FINISH: --	
DATE 2/8/2015	APVD BY :	SCALE 3:1	SHEET 1 OF 1

FILE : CLK-DWG-26