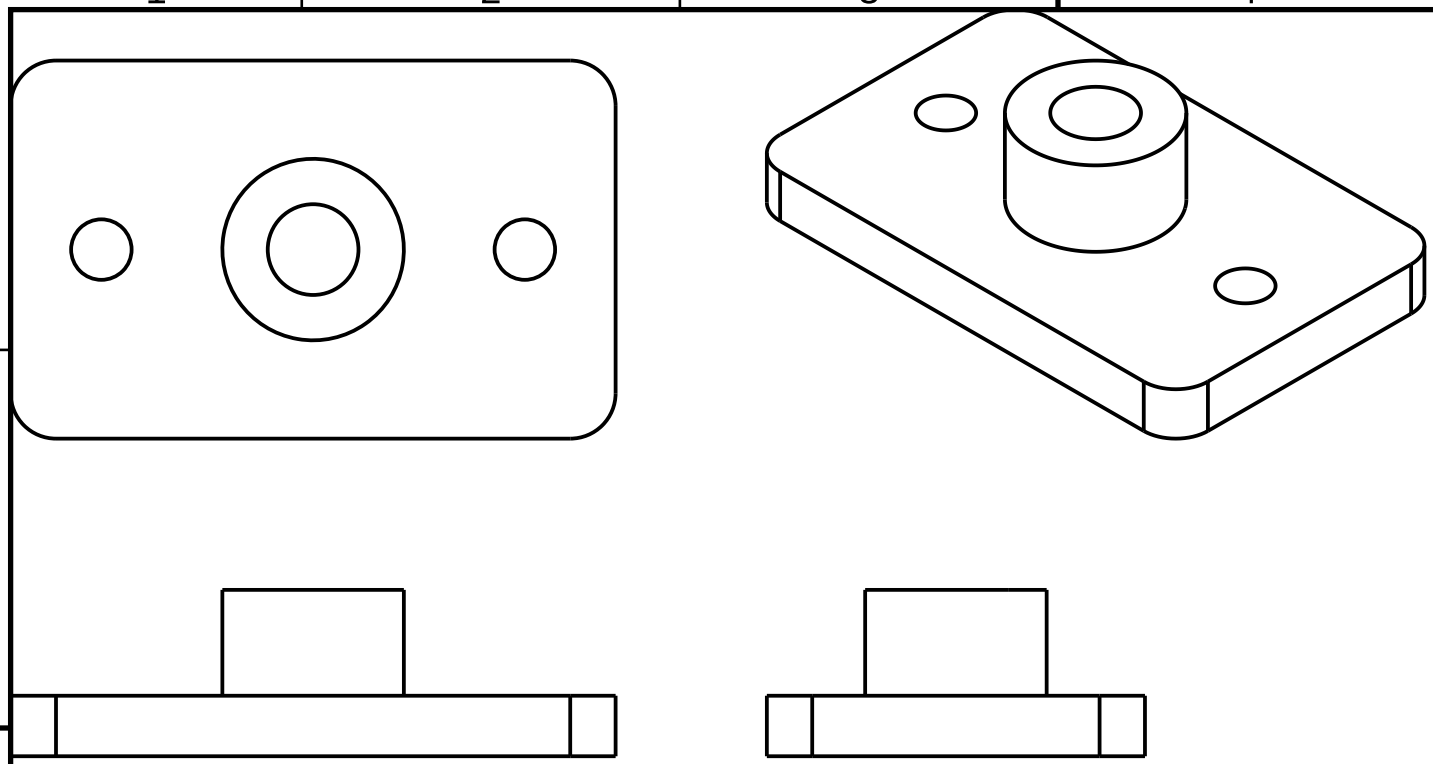

Scale 1:1	Document type Part drawing	Document status	Language EN	Revision	Department
Legal owner		General tolerances Unless stated: linear ±0.2 mm, angles ±0.5°. Break sharp edges 0.2 mm.			Projection
Material Default		Finish			Mass 0.04 kg
Created by	Approved by		Date of issue		Sheet 1/1
Title SamplePlate			Identification number SamplePlate		

A4