

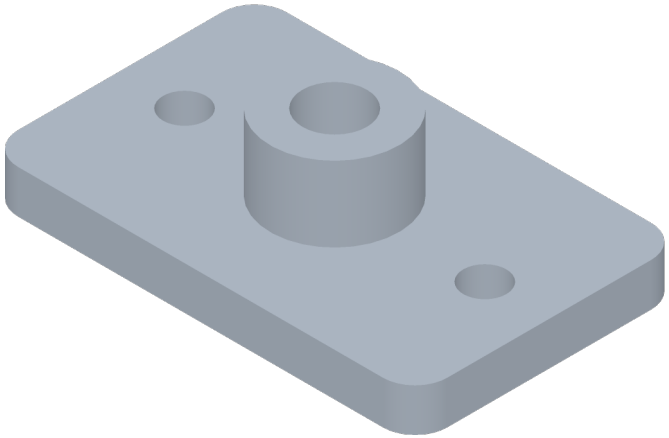

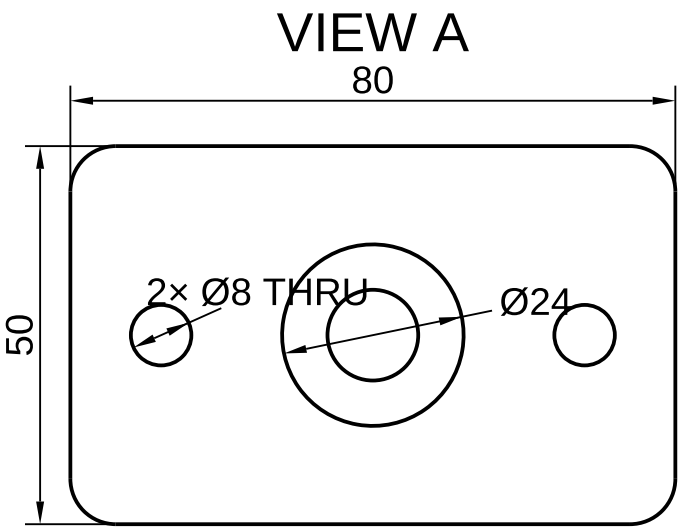

NOTES
1. ALL DIMENSIONS IN MM.
2. BREAK SHARP EDGES.

Scale	Document type	Document status	Language	Revision	Department
1:1	Part drawing	Qualification	EN	A	Engineering

Legal owner	General tolerances	Projection
brainboxemb	Unless stated: linear ±0.2 mm, angles ±0.5°. Break sharp edges 0.2 mm.	

Material	Finish	Mass
Qualification material	As modelled	0.04 kg

Created by	Approved by	Date of issue	Sheet
Forge	CI	2026-11-25	1/1

Title	Identification number
Sample Plate	SCPF-DWG-001

A4