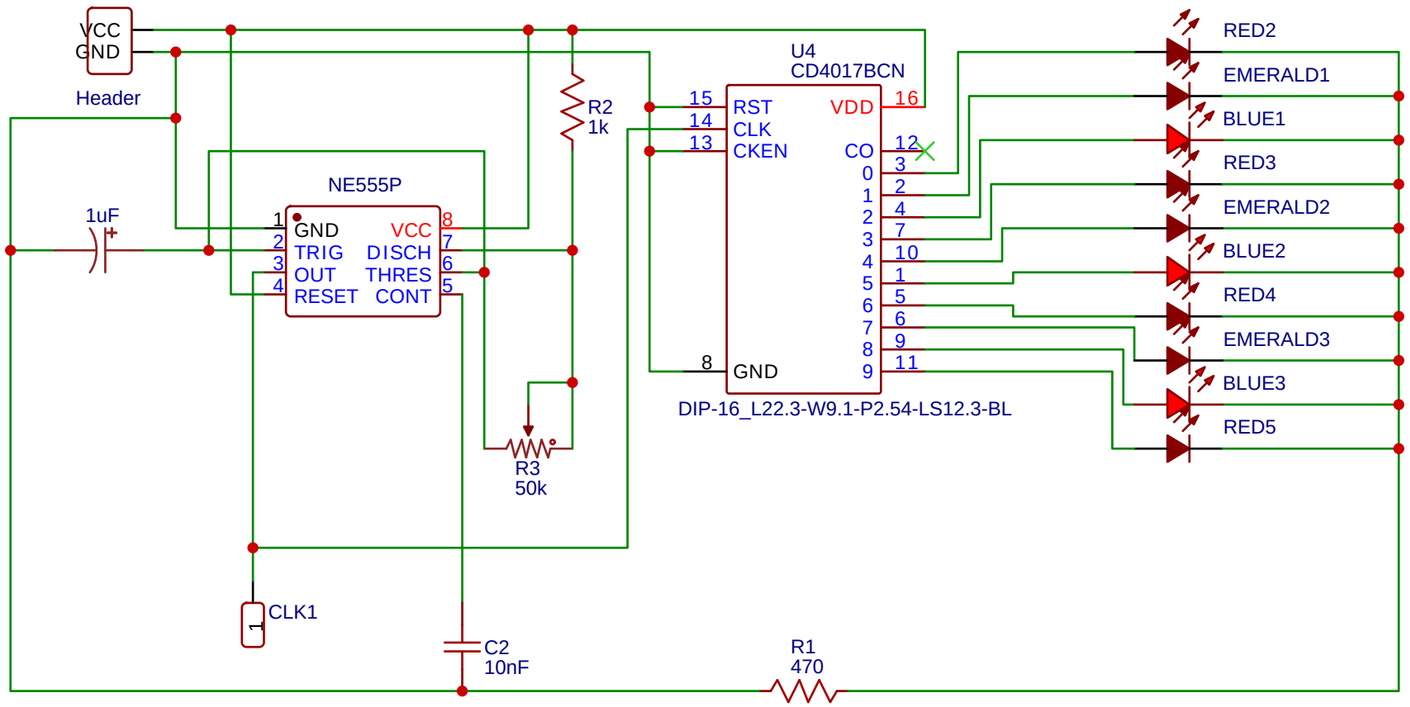


| | | |
|---|---|---|
| TITLE: Sheet_1 | | REV: 1.0 |
| EasyEDA | Company: Your Company | Sheet: 1/1 |
| | Date: 2025-03-10 Drawn By: roxtar | |