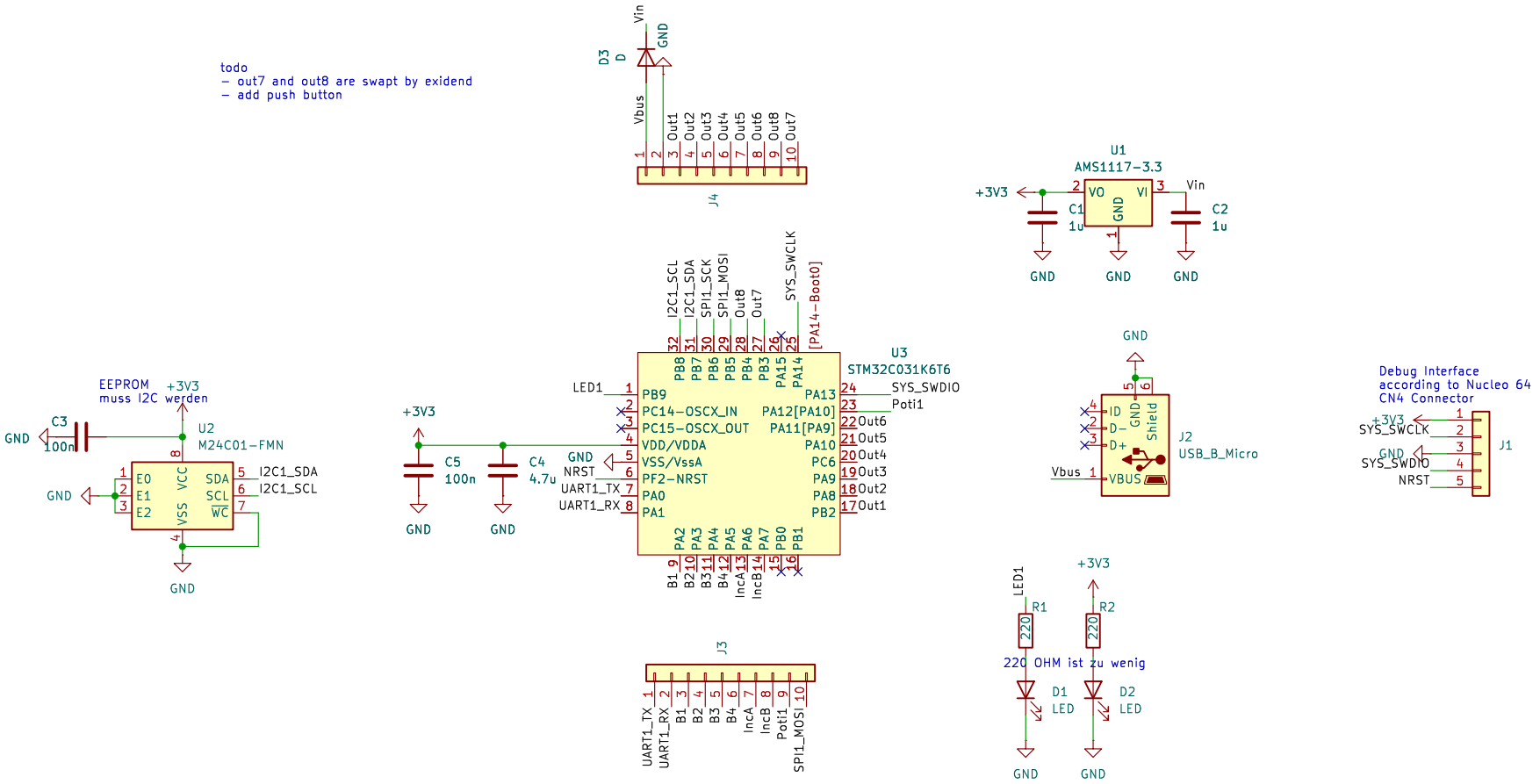

Lukas Bartels

Sheet: /

File: LimbusZero.kicad_sch

Title: LimbusZero

Size: A4	Date: 2024-07-15	**Rev: v.0.1**
KiCad E.D.A. 8.0.3		Id: 1/1