ISFG 2024 Pre-congress Workshop
Santiago de Compostela
Sept 10th 2024

Kinship Statistics and Pedigree Analysis

Teachers

Thore Egeland

Magnus Dehli Vigeland

Schedule

The workshop is run as a full-day course on Tuesday 10th, from 9 to 18:30 (CEST). The following schedule is tentative:

Morning session – Pedigree analysis: Basic

- 09:00–10:00 Lecture 1. **Pedigrees and measures of relatedness** (MDV)
- 10:00–11:00 Exercise set 1
- 11:00–11:15 *Break*
- 11:15–12:00 Lecture 2. **Kinship testing** (TE)
- 12:00–12:45 Exercise set 2
- 12:45–13:00 Summary and discussion

Lunch break 13:00 - 14:30

Afternoon session – Pedigree analysis: Advanced

- 14:30–15:30 Lecture 3. **Relatedness inference and pedigree reconstruction** (MDV)
- 15:30–16:15 Exercise set 3
- 16:15–16:30 *Break*
- 16:30–17:30 Lecture 4. **Disaster victim identification** (TE)
- 17:30–18:15 Exercise set 4
- 18:15–18:30 Summary and discussion

Home page
https://magnusdv.github.io/pedsuite/articles/web_only/course-isfg2024.html

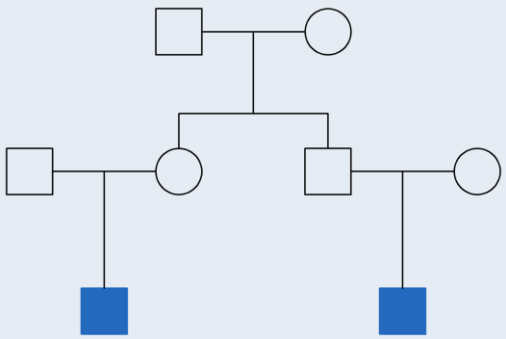

Lecture 1:
Pedigrees and measures of relatedness

ISFG 2024 Pre-congress Workshop

Kinship Statistics and Pedigree Analysis: Basic

Magnus Dehli Vigeland

Outline

- Part I: *Pedigrees*
  - Conventions and terminology
  - QuickPed
- Part II: *Measures of relatedness*
  - Identity by descent (IBD)
  - Kinship/inbreeding coefficients
  - IBD triangle
  - Realised relatedness
- (Part III: Crash course in R)

Part I: Pedigrees

Conventions and terminology

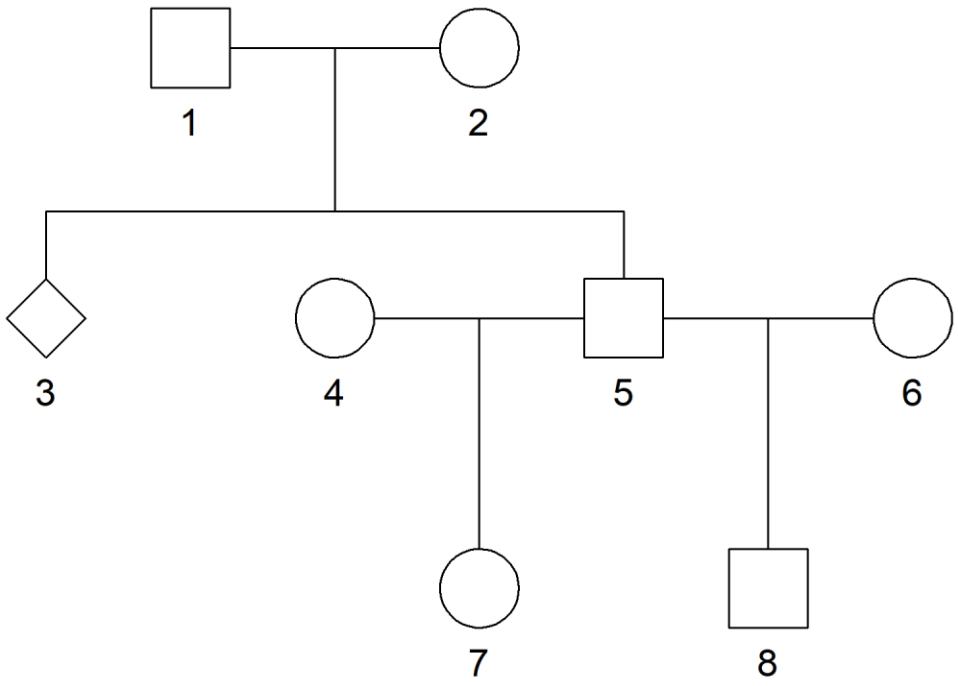

= male

= female

= unknown

Conventions and terminology

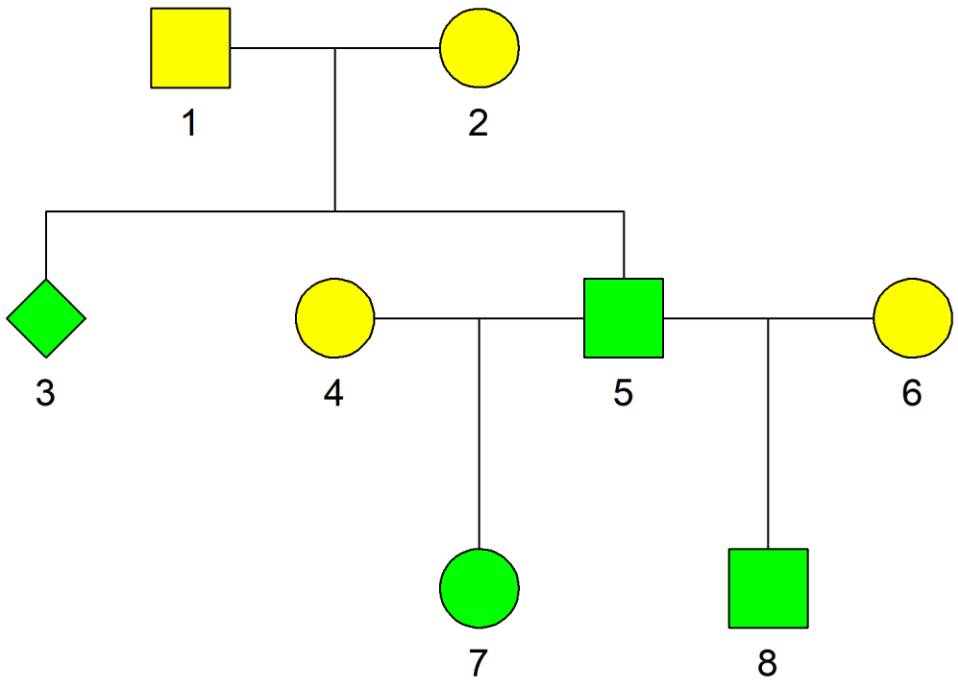

= male

= female

= unknown

Founders
No parents included in the pedigree

Nonfounders
Parents are included

Conventions and terminology

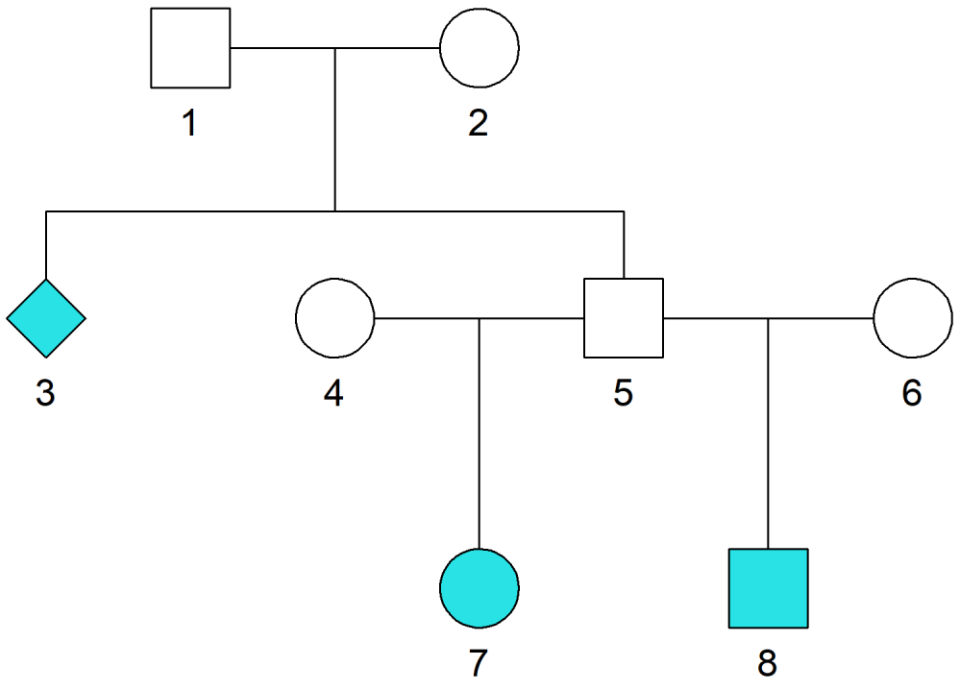

= male

= female

= unknown

Founders
No parents included in the pedigree

Nonfounders
Parents are included

Leaves
No children included

Conventions and terminology

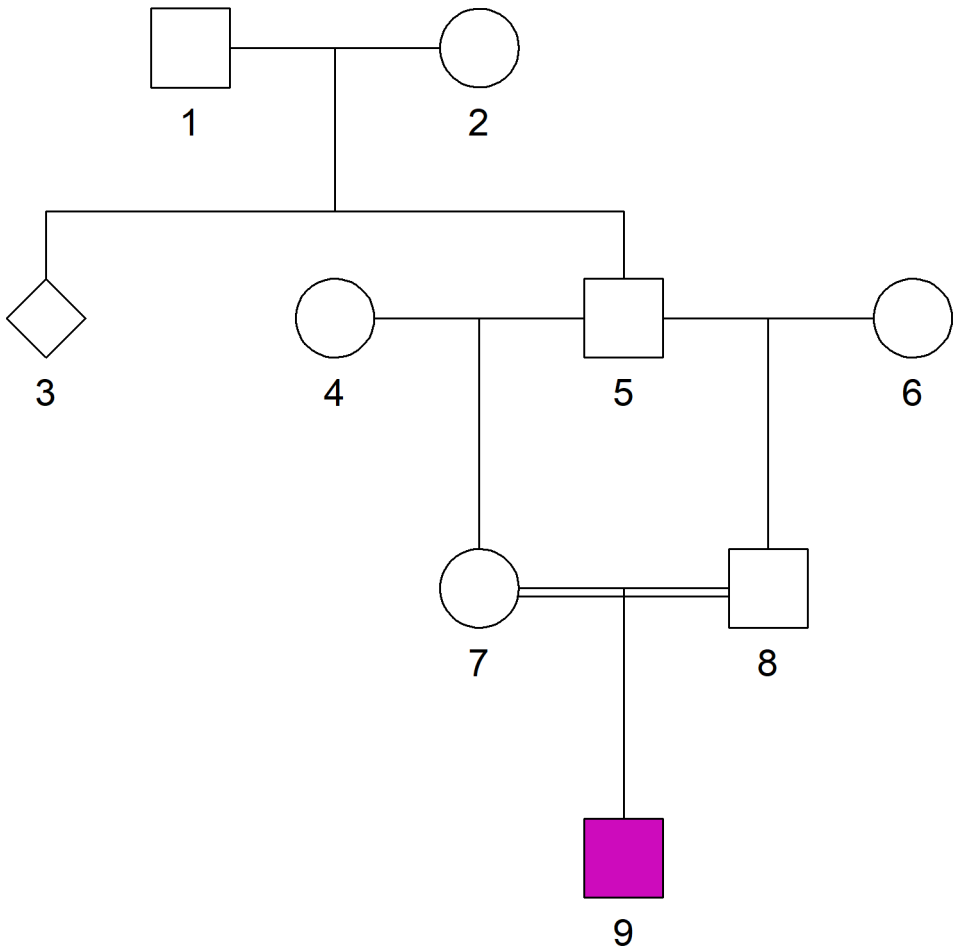

= male

= female

= unknown

Founders
No parents included in the pedigree

Nonfounders
Parents are included

Leaves
No children included

Inbred
Children of related parents

Alternative ways of drawing pedigrees

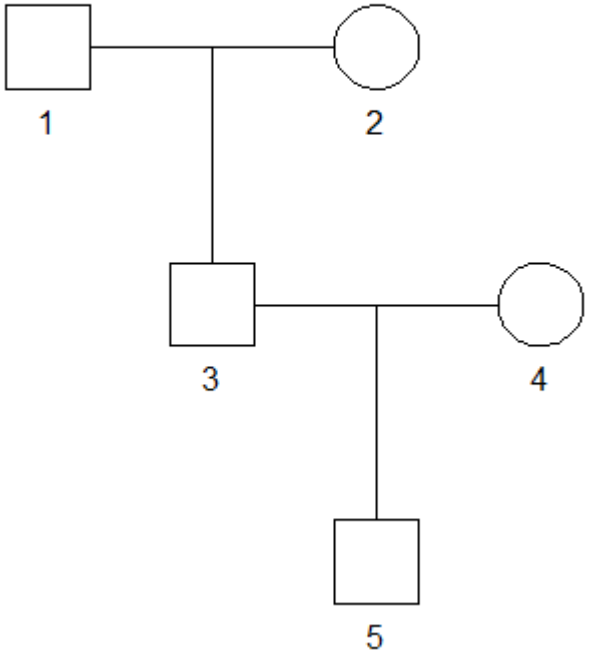

Standard

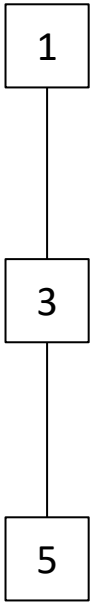

Simplified

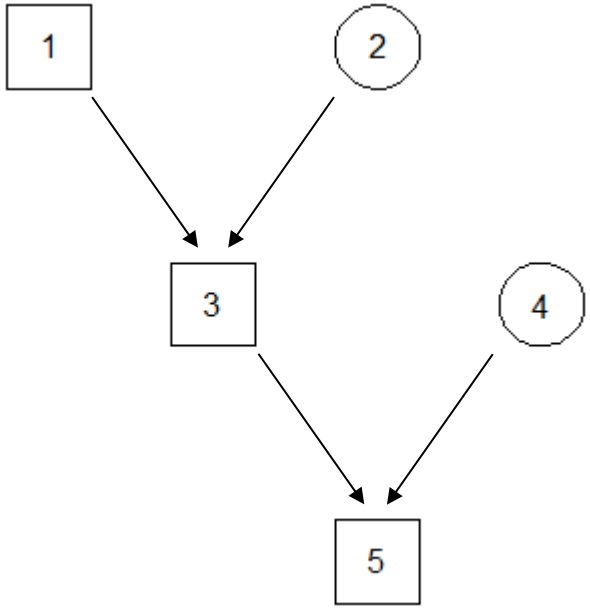

Directed acyclic graph

Some common relationships

(and some less common...)

Cousin relationships

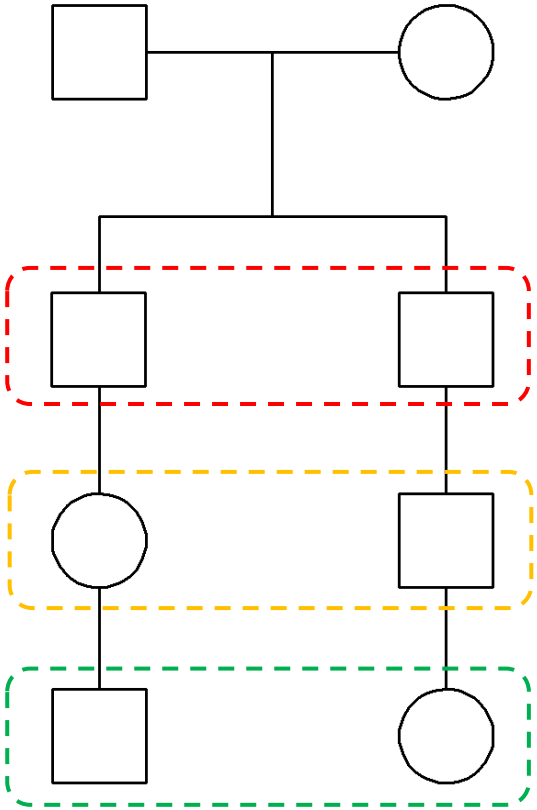

Cousin relationships

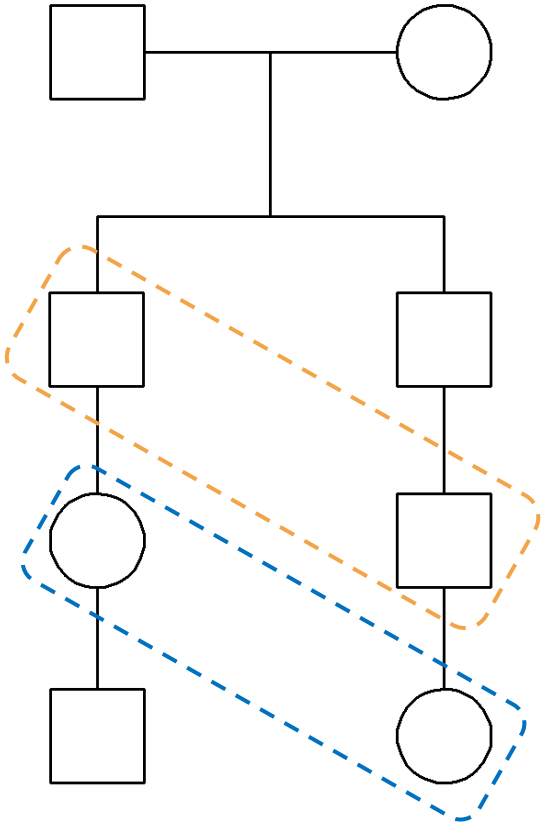

Uncle - nephew
(*avuncular*)

First cousins
once removed

Cousin relationships

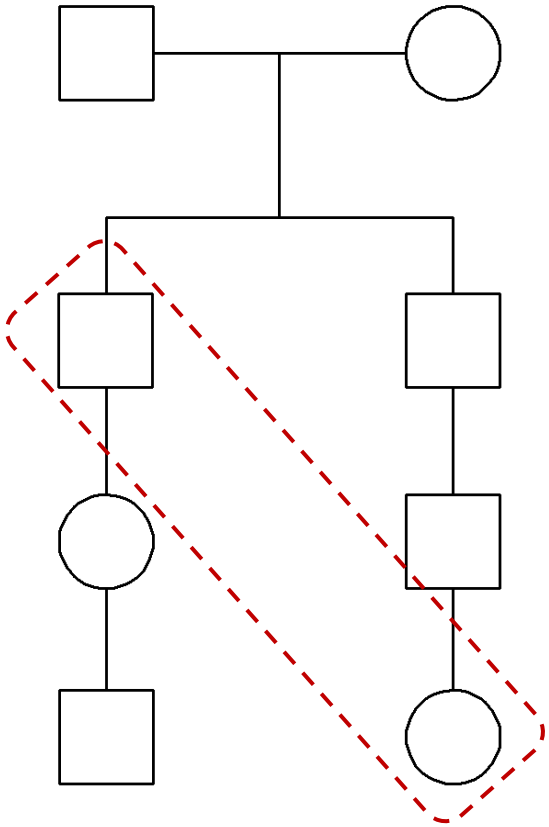

Grand-uncle
(or *great uncle*)

Half cousin relationships

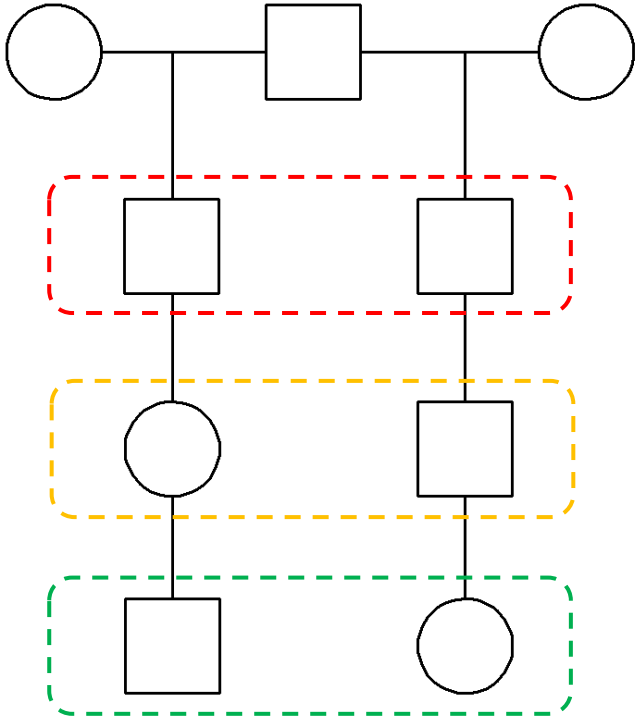

Half siblings

Half first cousins

Half second cousins

Half cousin relationships

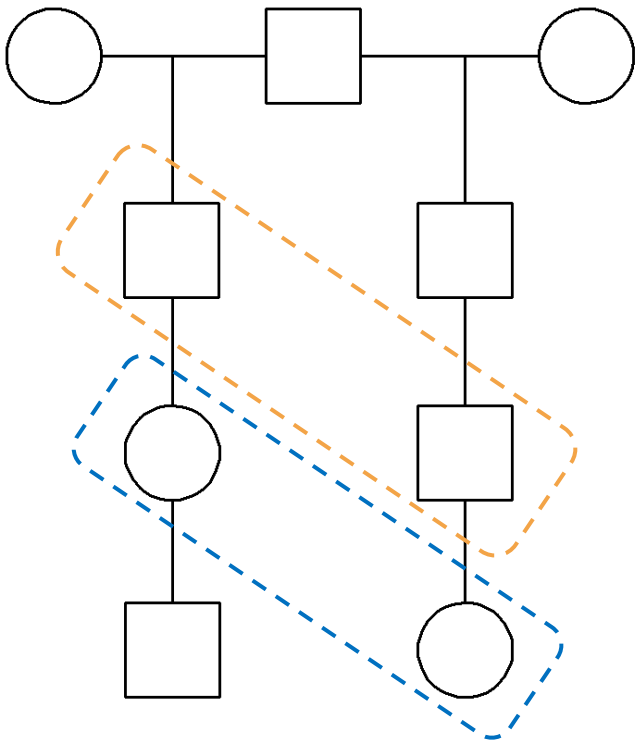

Half-uncle - half-nephew
(*half avuncular*)

Half first cousins
once removed

Double relationships

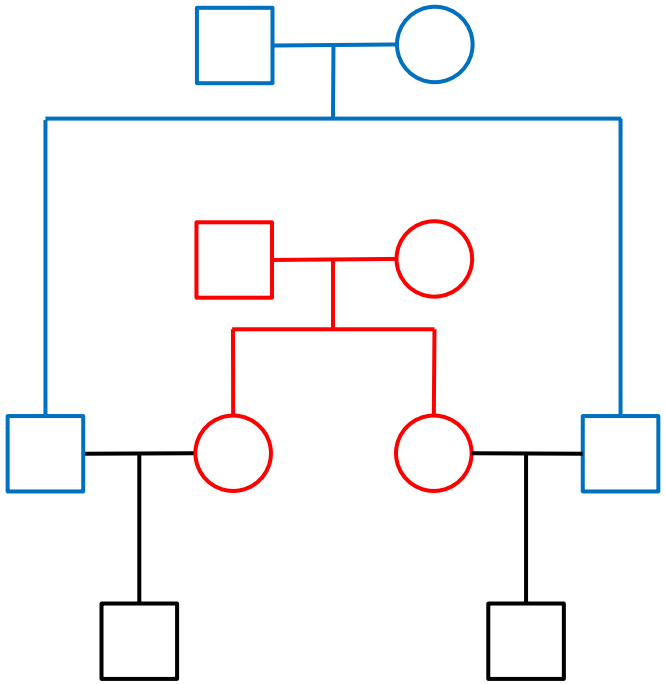

Double first cousins

The connoisseur's favourite

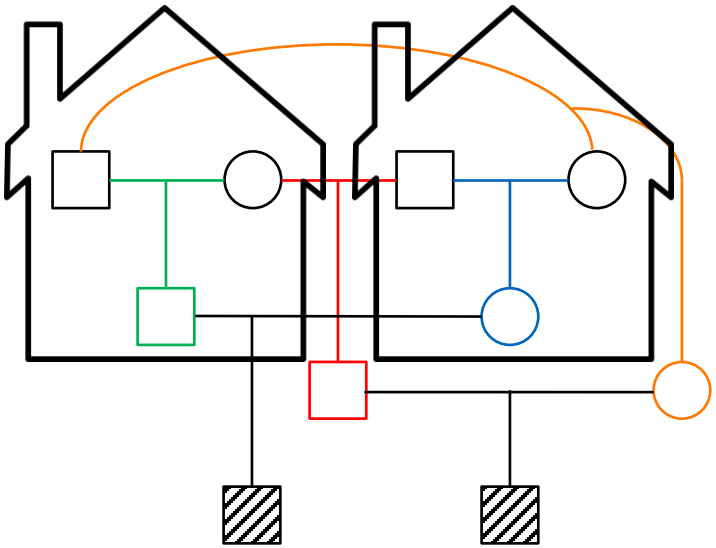

Quadruple half first cousins!

What software exists to create pedigrees?

It depends!

- medical genetics
- forensic genetics
- animal pedigrees
- amateur genealogy

In this course:

- QuickPed
- R

https://magnusdv.shinyapps.io/quickped/

QuickPed: An Interactive Pedigree Creator

New app design!
Discover the new features
Or stay with the old version: QuickPed3

Purpose: QuickPed lets you rapidly create attractive pedigree plots, save them as images or text files, and analyse the relationships within them.

Instructions: Choose a suitable start pedigree and modify it by clicking on individuals and using appropriate buttons. For example, to add a male child, select the parent(s) and press the icon. Check out the online user manual for various tips and tricks, including an introduction to relatedness coefficients.

Citation: If you use QuickPed in a publication, please cite this paper: Vigeland MD (2022). QuickPed: an online tool for drawing pedigrees and analysing relatedness. *BMC Bioinformatics*, **23**. DOI:10.1186/s12859-022-04759-y.

Quick start

Built-in pedigree

Trio

or

Load a ped file

or

Random pedigree

Reset all

Modify

Add

Sex

Style

Fill

Twins MZ / DZ

Remove

Undo

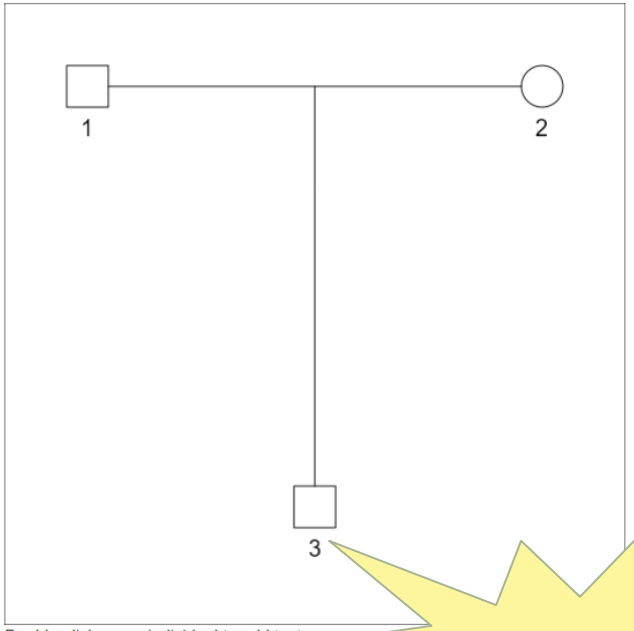

Double-click on an individual to add text

Labels

1, 2, 3, .. I-1, I-2, ..

Show all Hide all

1
2
3

Update

Plot settings

Width 430 **Height** 430

Cex 1,4 **Symbols** 1

Margins 3

Other options (beta)

- Straight legs
- Arrows

R code

PNG PDF

Relationships

Ped file

Include

- Headers
- Family ID
- Affection status

Save ped file

DEMO!

Part II: Measures of relatedness

Typical responses

- being connected by family
- having a common ancestor...
  (not too far back)
- sharing DNA ...
  (more than unrelated people)

To make this precise, we need some terminology!

IBD and autozygosity

- identity by descent (IBD)
  - when alleles have a common origin **in the given pedigree**

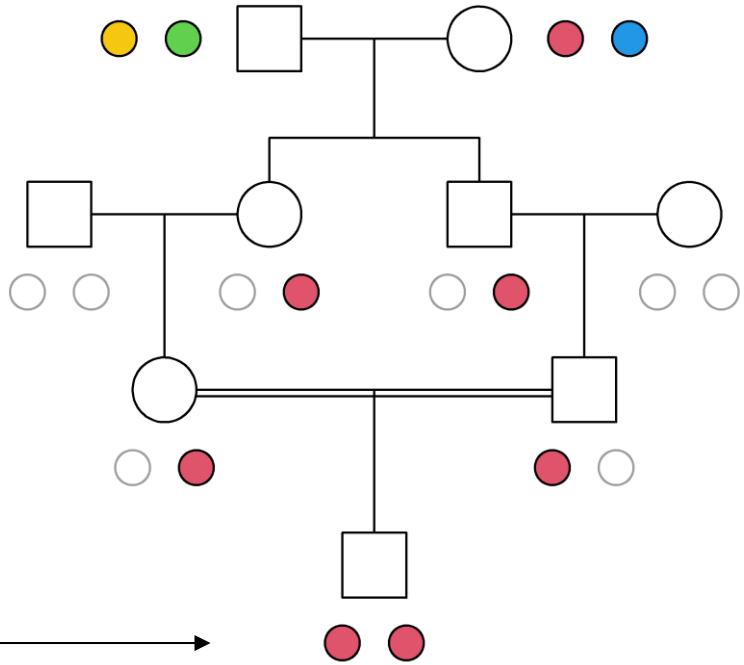

- autozygous
  - homozygous; alleles are IBD

Inbreeding coefficient

$f = Pr(autozygosity)$

Coefficient of kinship/inbreeding

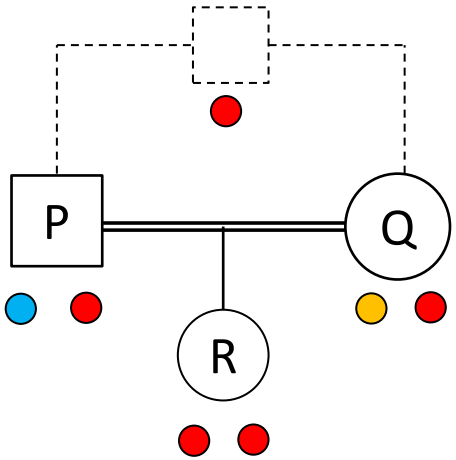

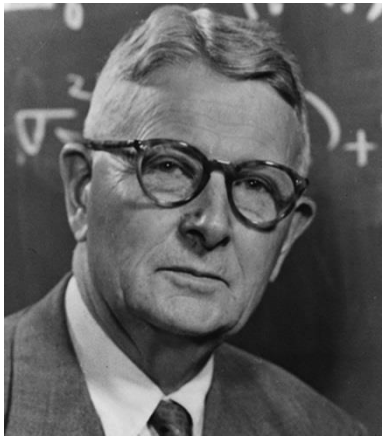

Sewall Wright
(1889 - 1988)

- Wright (1921): The kinship coefficient φ

$$\varphi_{P,Q} = Pr(\text{ P and Q emit IBD alleles})$$
$$= Pr(\text{ R is autozygous })$$
$$= f_R$$

Kinship of parents = inbreeding of child

P and Q related

$\Updownarrow$

$\varphi_{P,Q} > 0$

Example: Kinship coefficient of half siblings

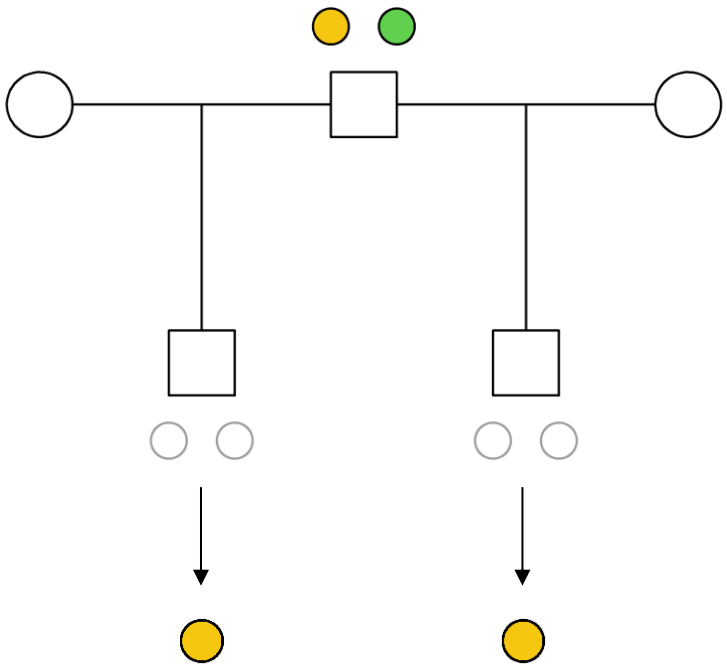

Kinship coefficient

$$\varphi = P(\text{from both}) \cdot 2$$
$$= 0.5^4 \cdot 2$$
$$= 1/8$$

green

Inbreding coefficient: Example

Wright's path formula:

$$\varphi_{P,Q} = \sum_A \sum_v \left(\frac{1}{2}\right)^{|v|+1} (1 + f_A)$$

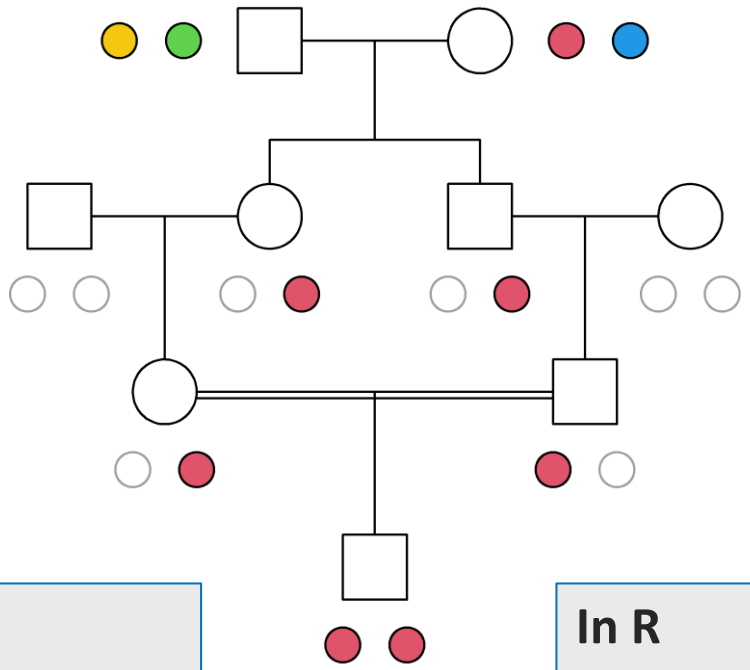

By hand

$$f = P(\bullet \text{ autozygous}) \cdot 4$$
$$= 0.5^6 \cdot 4$$
$$= 1/16$$

other colors

In R

```
>   library(pedsuite)

>   x = cousinPed(1, child = T)
>   inbreeding(x, ids = 9)
[1] 0.0625
```

More kinship & inbreeding coefficients

Relationship	kinship φ = f of child
Parent-child	1/4
Full siblings	1/4
Half siblings	1/8
Grandparent-grandchild	1/8
Avuncular (uncle/aunt)	1/8
1st cousins	1/16
2nd cousins	1/64
3rd cousins	1/256

Challenge
Different relationships with the same kinship!

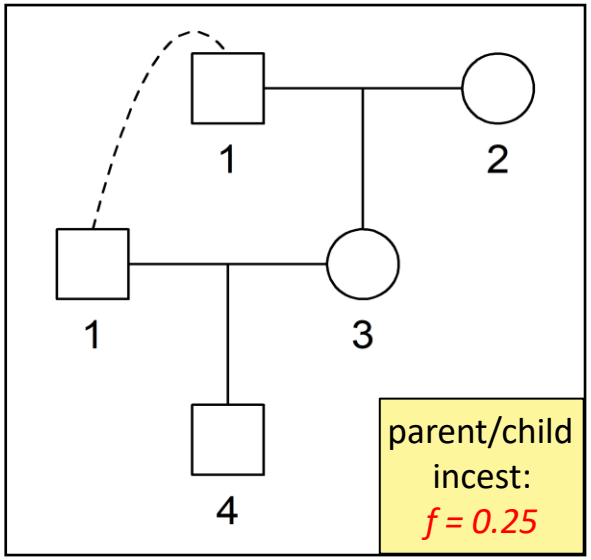


```
>   x = nuclearPed(1, sex = 2) |>
      addSon(parents = c(1, 3))

>   kinship(x, ids = c(1, 3))
[1] 0.25
>   inbreeding(x, id = 4)
[1] 0.25
```

The IBD triangle

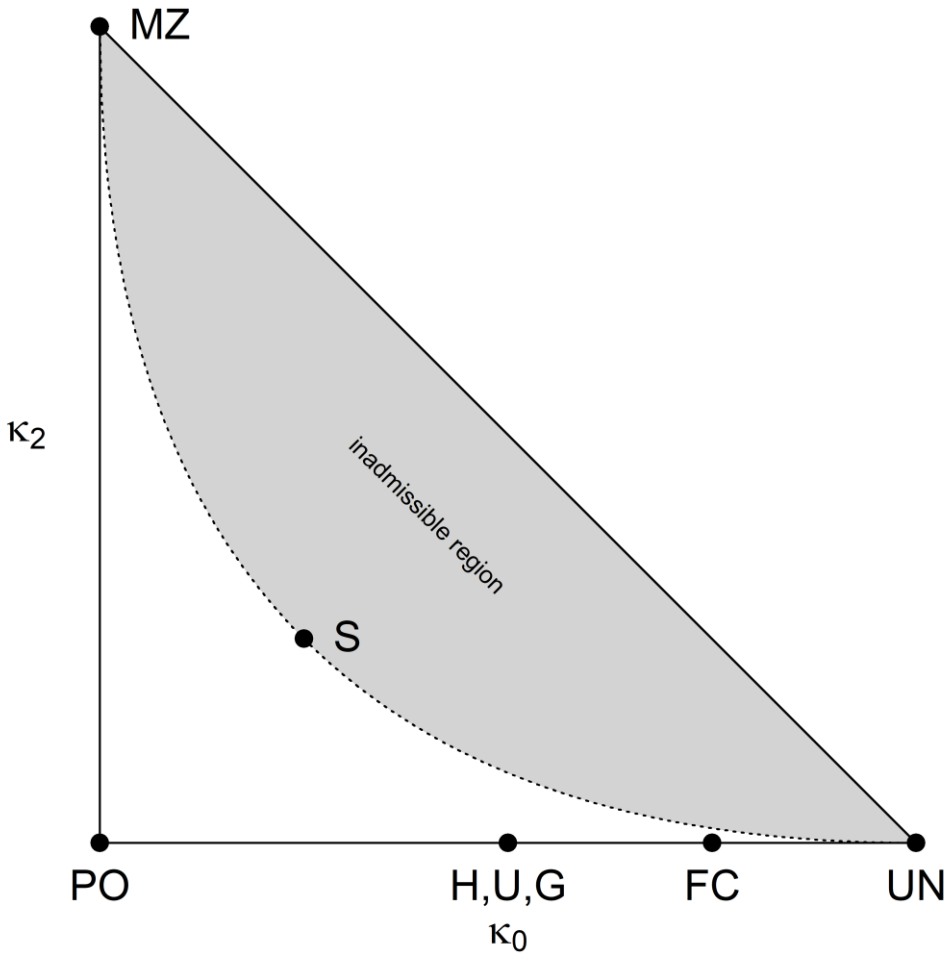

Charles Cotterman
(1914-1989)

Elisabeth Thompson
(1949 -)

IBD coefficients

- Summary so far:
  - Two individuals are related if they can have IBD alleles
  - Their kinship coefficient meassures the amount of IBD sharing
- Natural generalisation:
  - How *many* alleles are IBD in each locus?

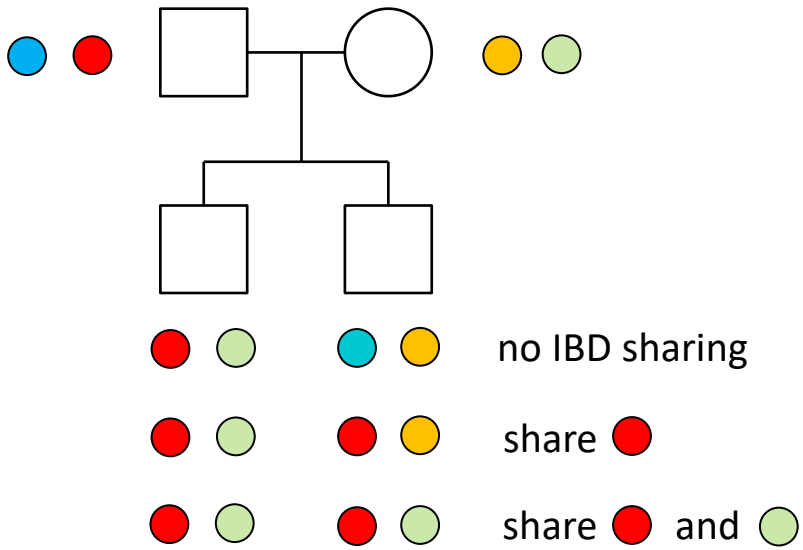

Definition

- $\kappa_0 = Pr(0 \text{ alleles IBD})$
- $\kappa_1 = Pr(1 \text{ alleles IBD})$
- $\kappa_2 = Pr(2 \text{ alleles IBD})$

(at random autosomal locus)

Three trivial relationships

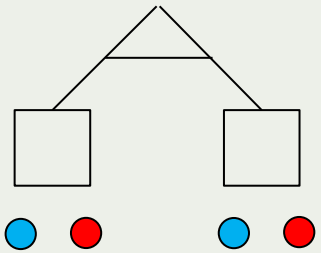

Monozygotic twins (MZ)

$(\kappa_0, \kappa_1, \kappa_2) = (0,0,1)$

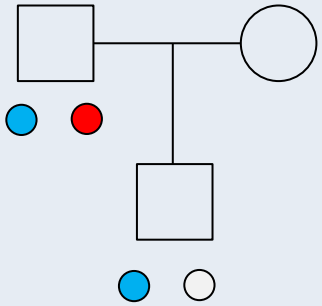

Parent-offspring (PO)

$(\kappa_0, \kappa_1, \kappa_2) = (0,1,0)$

Unrelated (UN)

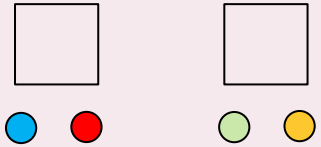

$(\kappa_0, \kappa_1, \kappa_2) = (1,0,0)$

The relatedness triangle

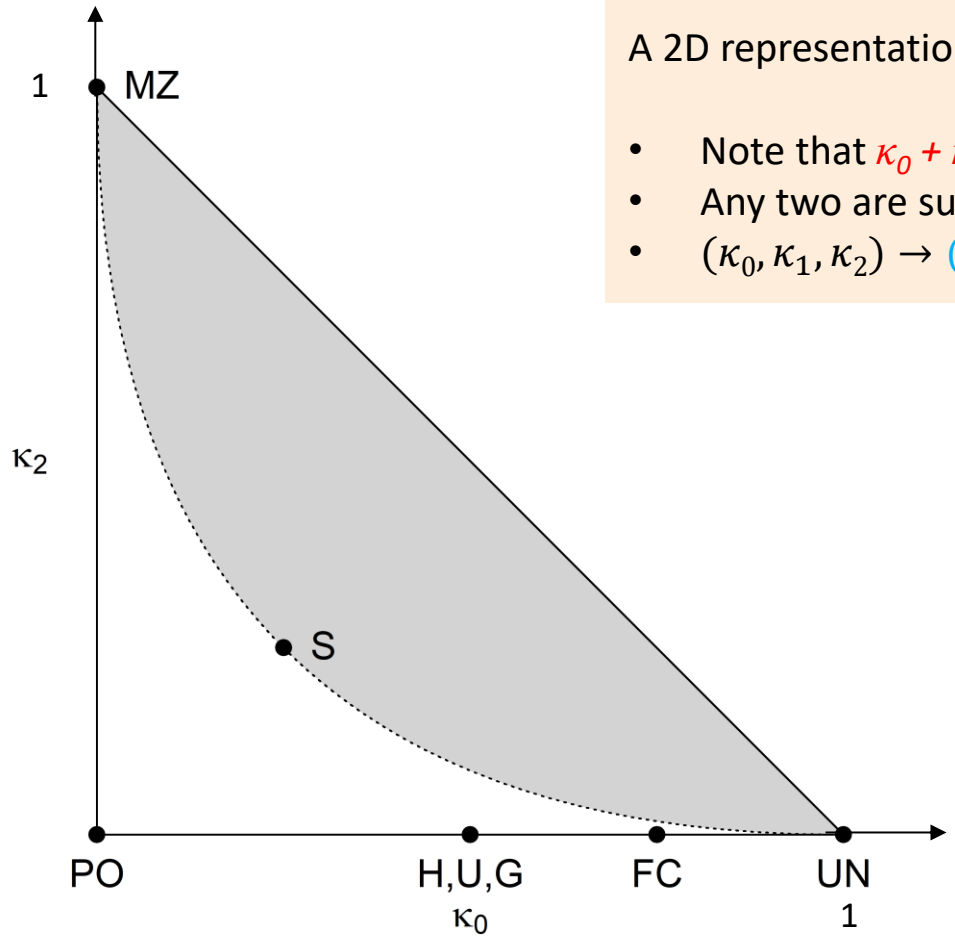

A 2D representation of $(\kappa_0, \kappa_1, \kappa_2)$

- Note that $\kappa_0 + \kappa_1 + \kappa_2 = 1$
- Any two are sufficient
- $(\kappa_0, \kappa_1, \kappa_2) \rightarrow (\kappa_0, \kappa_2)$

What are the coefficients of full sibs?

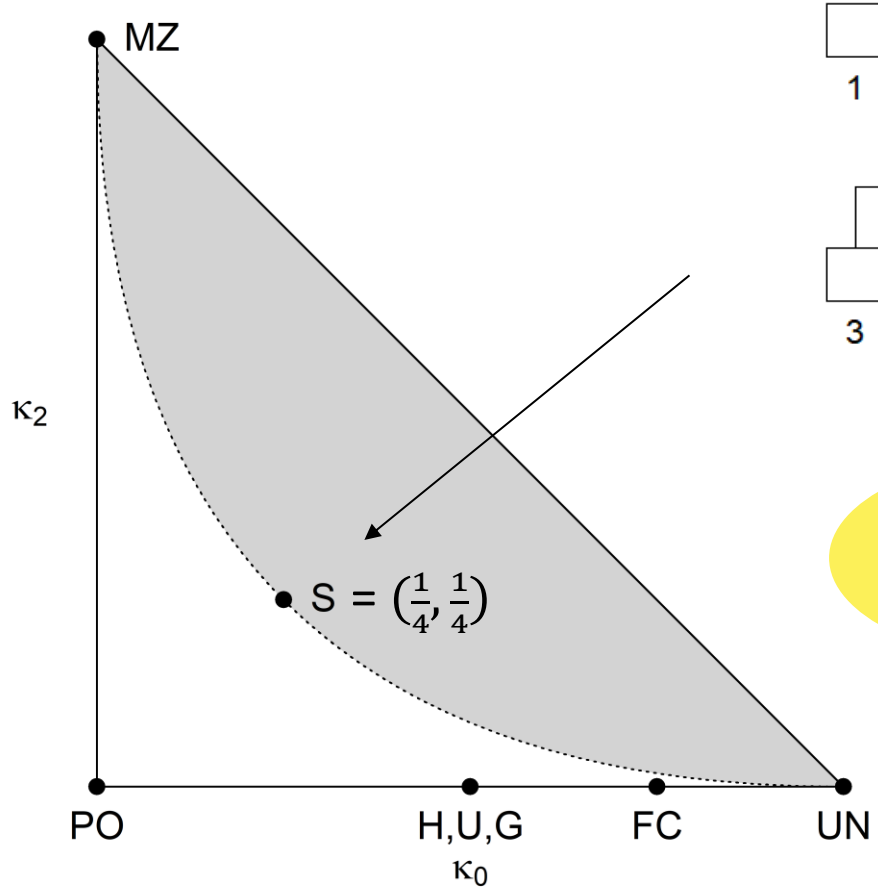

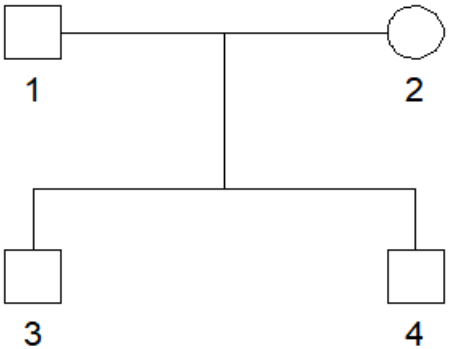

Let's do this in R!

ribd: Pedigree-based relatedness coefficients

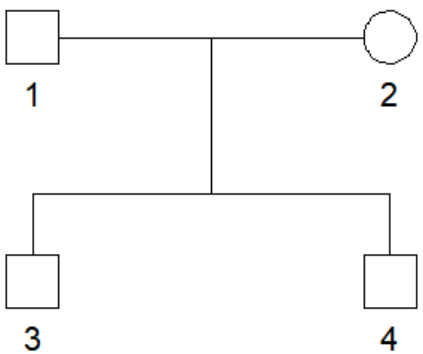

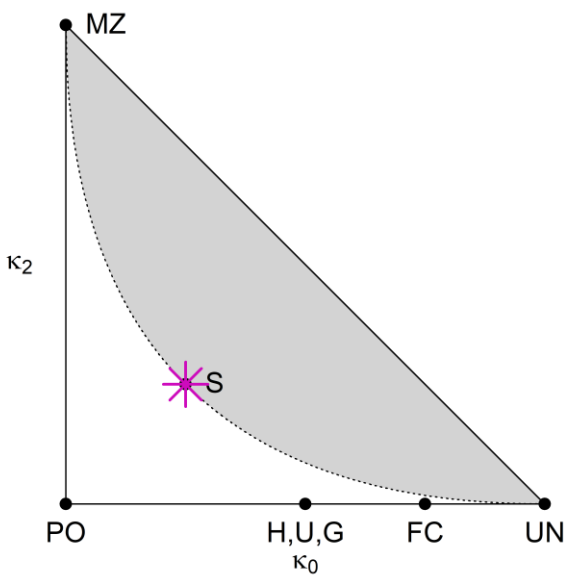


```
>   library(pedsuite)

>   x = nuclearPed(2)
>   plot(x)

>   kinship(x, ids = 3:4)
[1] 0.25

>   kappaIBD(x, ids = 3:4)
[1] 0.25 0.50 0.25

>   k = kappaIBD(x, ids = 3:4)
>   showInTriangle(k)
```

The relatedness triangle

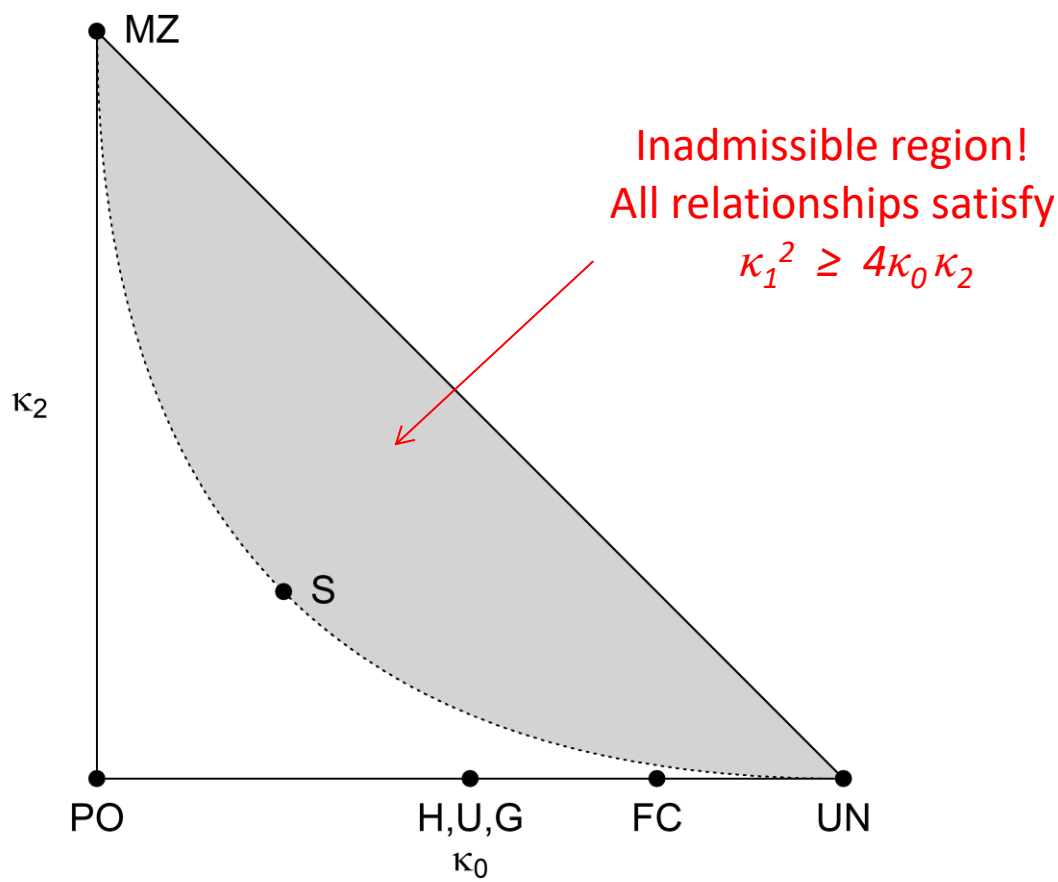

The relatedness triangle

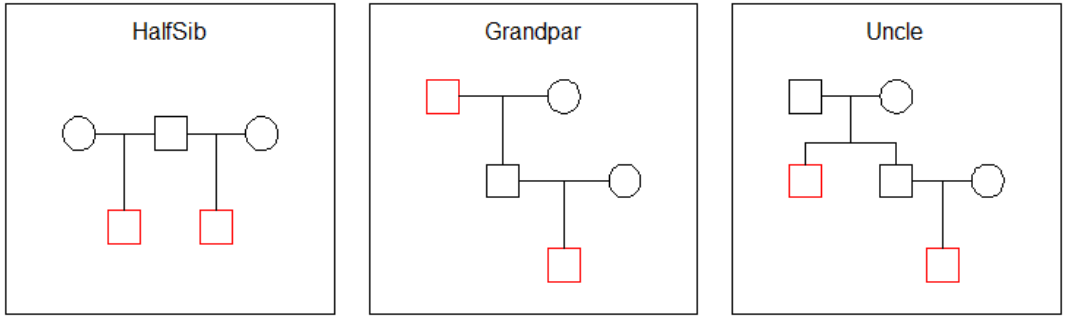

All have $\kappa_0 = \kappa_1 = \frac{1}{2}$

Some relationships coincide!

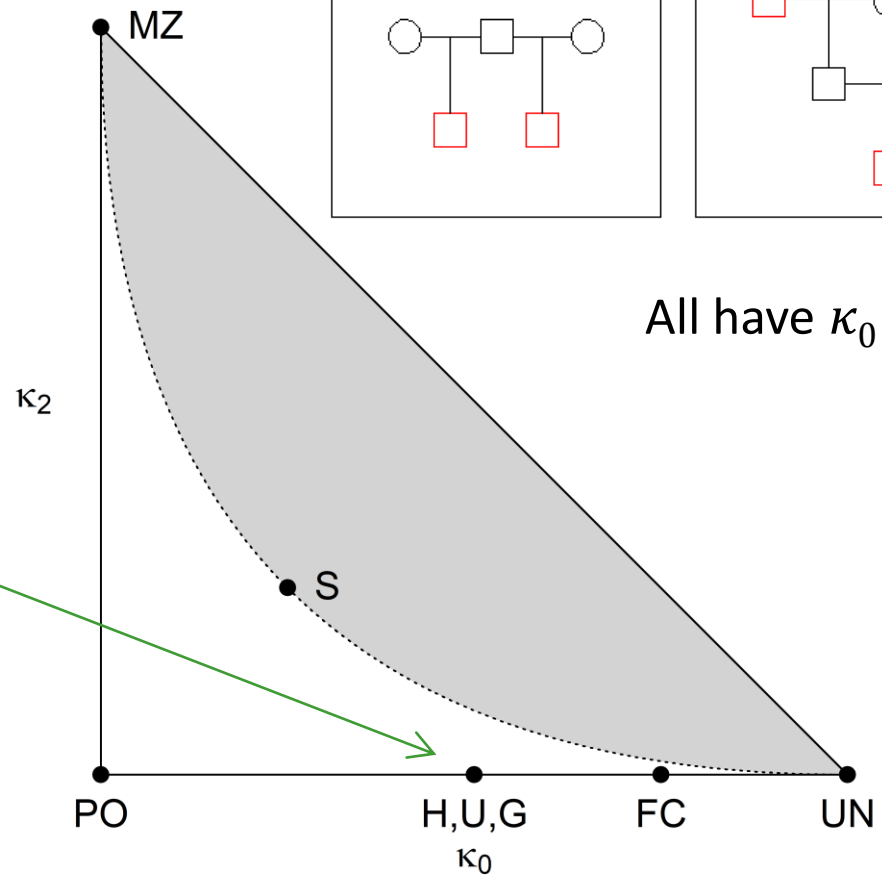

A word of caution

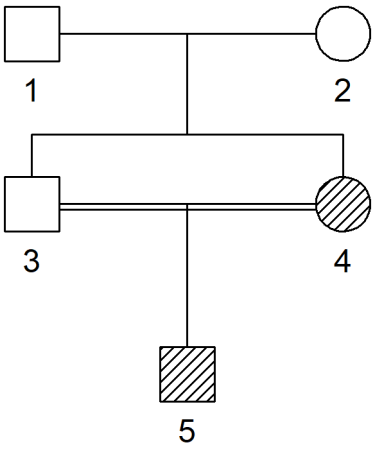

κ is only defined for non-inbred individuals.
For the whole story, we need 9 coefficients!

Jacquard's identity coefficients

Not suitable for a basic course ...

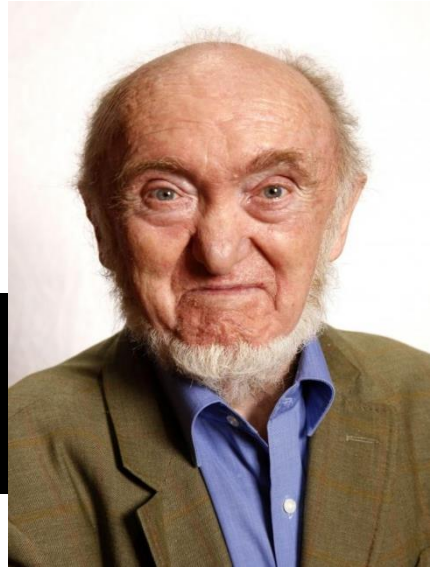

Albert Jacquard
(1925 - 2013)

Part II: Measures of relatedness

Realised relatedness

Meiotic recombination

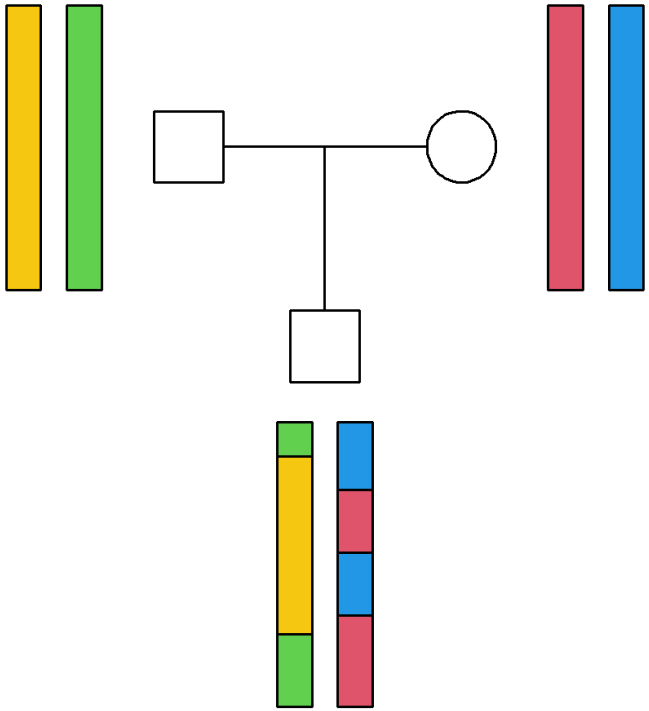

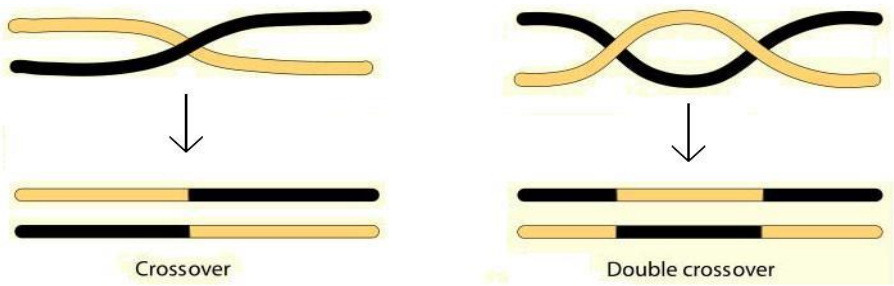

- Genetic distance between two loci: = average # crossovers/ meiosis
- Units:
  - 1 Morgan (M) = 1 crossover per meiosis
  - 1 centiMorgan (cM) = 0.01 M
- The human genome: Ca 30 Morgan

Rule of thumb: One crossover per chromosome arm

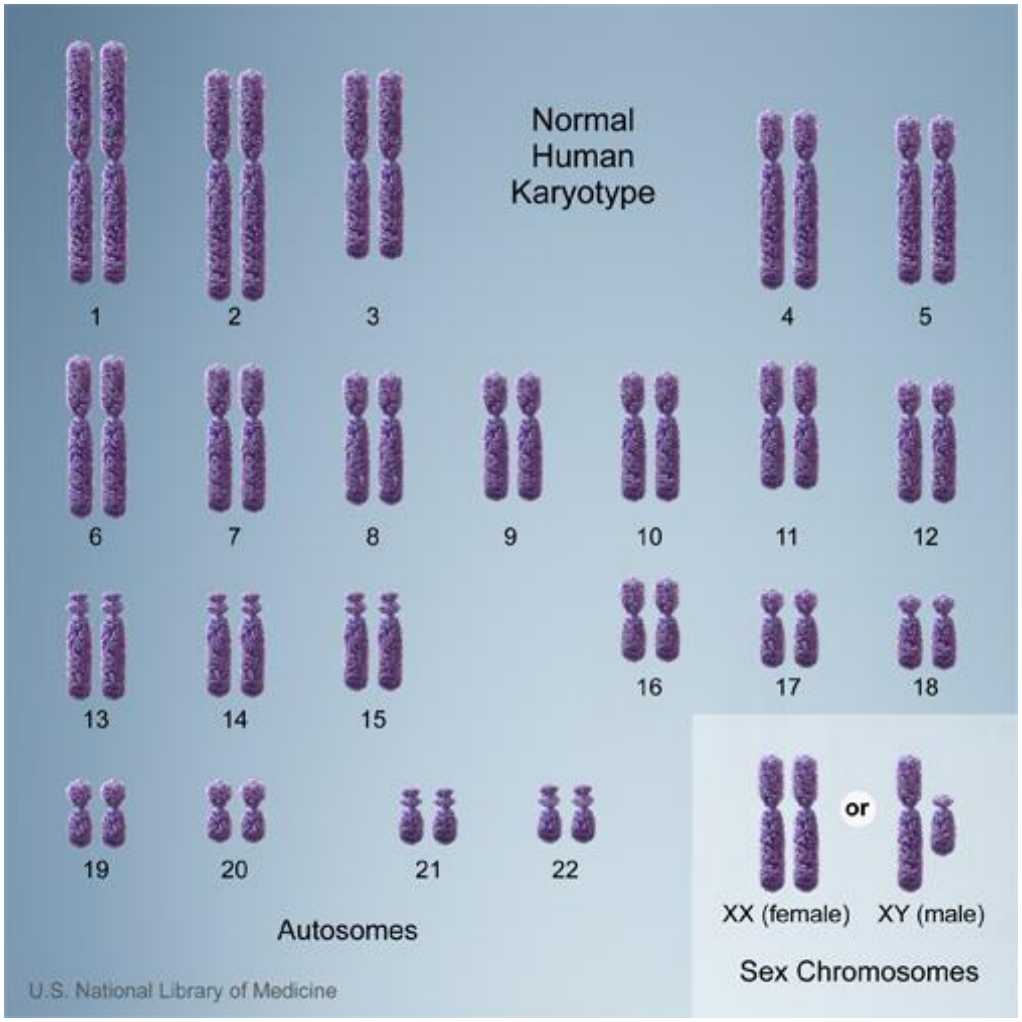

Realised inbreeding

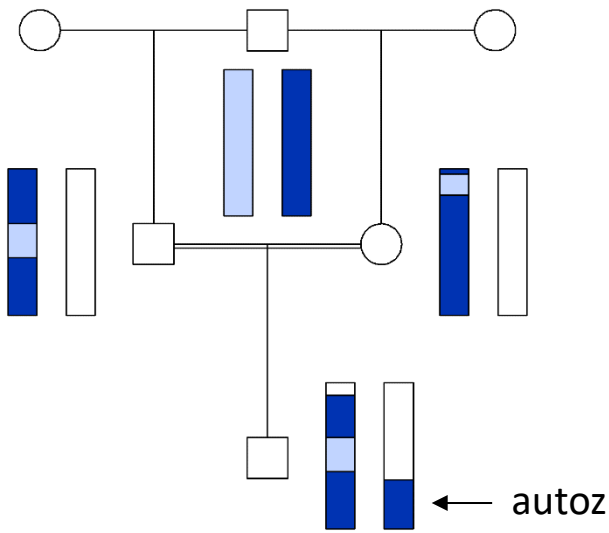

f_R = autozygous fraction of genome

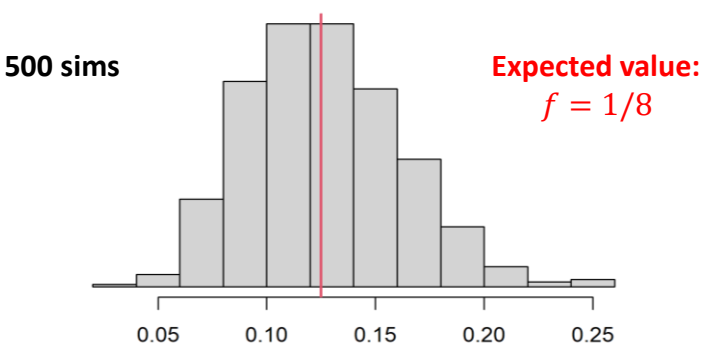

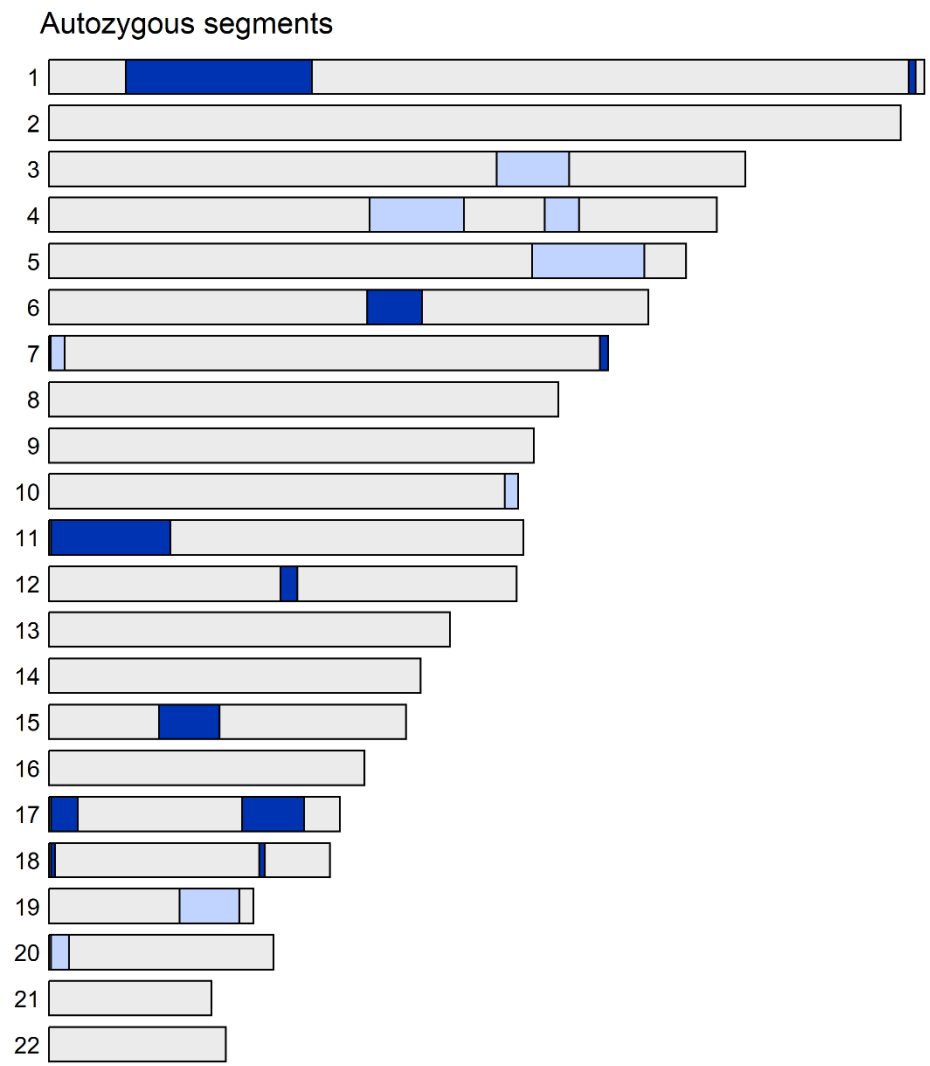

Realised IBD coefficients

1000 simulations

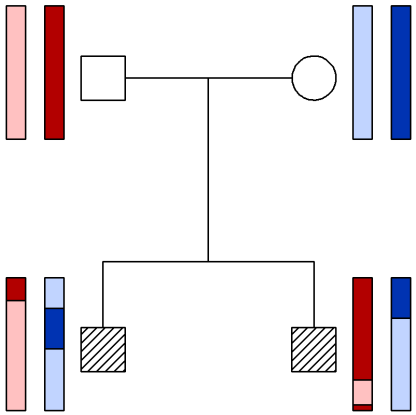

Realised IBD coefficients:
Proportions of genome with IBD = 0, 1, 2

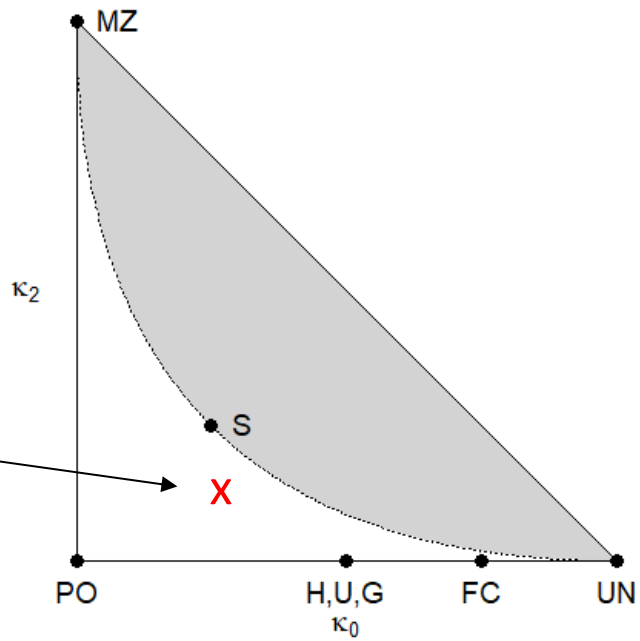

Variation in realised IBD coefficients

1000 simulations

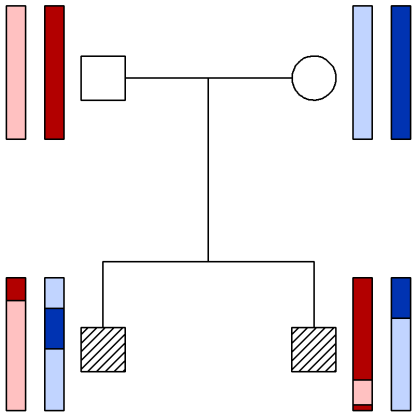

```
> library(ibdsim2)

> x = nuclearPed(2)
> s = ibdsim(x, N = 1000)
> k = realisedKappa(s, ids = 3:4)

> ribd::showInTriangle(k)
```

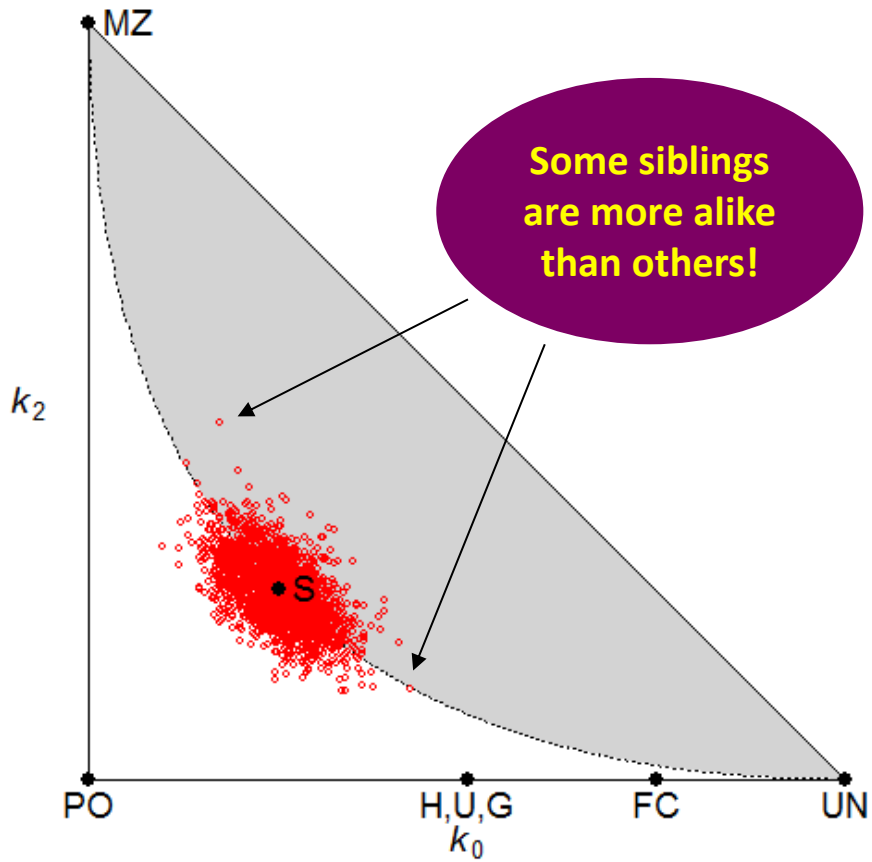

Some siblings are more alike than others!

Variation depends on the genome

Human:

- 22 autosomes
- 3000 cM

Opossum:

- 8 autosomes
- 800 cM

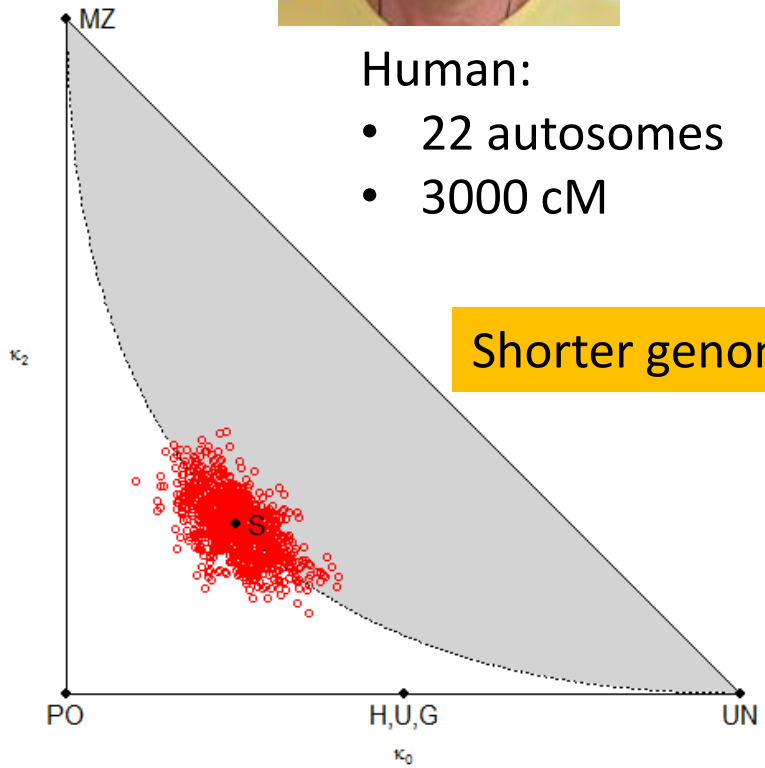

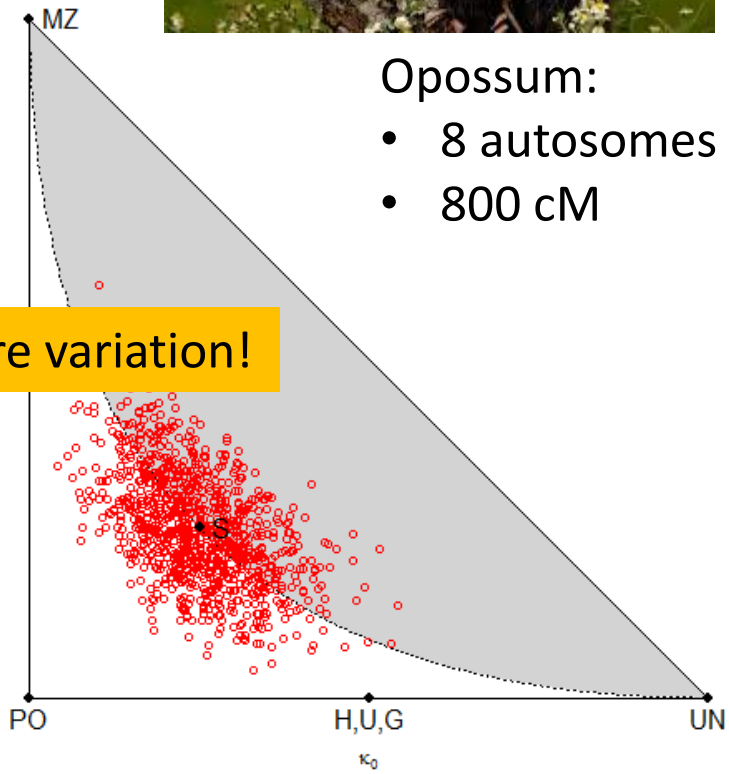

Shorter genome = more variation!

The probability of zero IBD

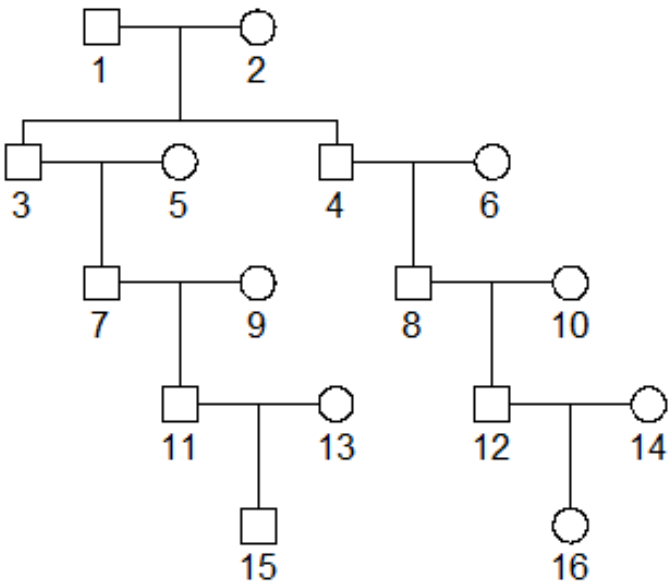

N'th cousins	*P*(zero IBD)
first	0.0 %
second	0.0 %
third	1.5 %
fourth	28 %
fifth	67 %

Third cousins

Expected fraction with IBD = 1:

$$k_1 = \frac{1}{64}$$

Two individuals can have a common ancestor without being genetically related

Part III: Crash course in R

What is R? (And why should you care?)

- A framework for statistical computing
  - calculator
  - data handling and numerical analysis
  - flexible plotting
  - programming language
  - external packages
    - anyone can make one
    - thousands!

Familias.no

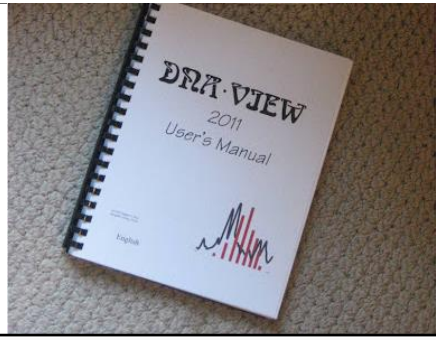

BONAPARTE

Designed, built and proven for real world case work

Pros
- free!
- very widely used
- anything is possible (but not always easy)
- scripting --> reproducibility

Cons
- learning curve
- packages come and go

Oh boy, that sounds great!

I which I knew R ...

Don't worry!

It's not that hard.

Here is a quick intro to R that contains most of what you need

Basic calculations

```
>   2 + 3
[1] 5
>   2+      3
[1] 5
>   (1 + 2) * 3
[1] 9
>   4^2
[1] 16
>   log(100)
[1] 4.60517
>   log(100, base = 10)
[1] 2
>   log10(100)
[1] 2
```

Spaces don't matter

$e^{4.60517} \approx 100$

Variables

I use this

Two (mostly synonymous) ways to assign values: **=** or **<-**

```
>   a = 5      or   a <- 5
>   b = 2      or   b <- 2
>   a
[1] 5
>   a - 2*b
[1] 1
```

Changing a variable:

```
>   a = a+1
>   a
[1] 6
```

Common beginners' mistake: forgetting to assign after change

Creating new variables from old:

```
>   newVar = a^b
>   newVar
[1] 36
```

Most programmers stick to either **camelCase** or **snake_case** when naming their variables

Vectors

```
>   c(3, 2, 6, -1)
[1]  3  2  6 -1
>   4:20
[1]  4  5  6  7  8  9 10 11 12
[10] 13 14 15 16 17 18 19 20
>   5:7 - 4
[1] 1  2  3
>   c(10,20,30,40) + c(1,3,8,0)
[1] 11 23 38 40
>   seq(from = 2, to = 15, by = 3)
[1]  2  5  8 11 14
```

The **c()** operator!

The **':'** operator
(shortcut for consecutive numbers)

There is a help page
for every function!
> **?seq**

Character vectors:

```
>   c("Alice", "Bob")
```

Logical vectors:

```
>   c(TRUE, FALSE, T, F)
[1] TRUE FALSE TRUE FALSE
```

Built-in logcial constants:
TRUE short form: **T**
FALSE short form: **F**

Matrix-like containers

Data frames: Collects vectors of the same length

```
>   x = data.frame(Name   = c("Ali", "Bob", "Joe"),
                   Weight = c(75, 81, 70))
>   x
  Name Weight
1  Ali     75
2  Bob     81
3  Joe     70
```

Use **$** to refer to columns: **x$Name**

Matrices:

```
>   x = matrix(1:12, nrow = 3, ncol = 4)
>   x
     [,1] [,2] [,3] [,4]
[1,]    1    4    7   10
[2,]    2    5    8   11
[3,]    3    6    9   12
```

Note: No **$** for matrices!

First column: **x[, 1]**
First row: **x[1,]**

Faster, but less flexible. Good for all-numeric (or all-character) data

Lists

```
>   a = list(good = 1:3, bad = 0)
>   a
$good
[1] 1  2  3

$bad
[1] 0
>   a$good
[1] 1  2  3
```

Alternative to **$**:
a[["good"]]

Easy to change lists:

```
>   a$bad = NULL              (delete item)
>   a$ok = -1                 (add new item)
>   a$good = c(a$good, 10)    (modify item)
>   a
$good
[1] 1  2  3  10

$ok
[1] -1
```

Basic plots

Let's plot the graph of $y = x^2$!

```
>   x = seq(-2, 2, length = 100)
>   y = x^2
>   plot(x, y)
```

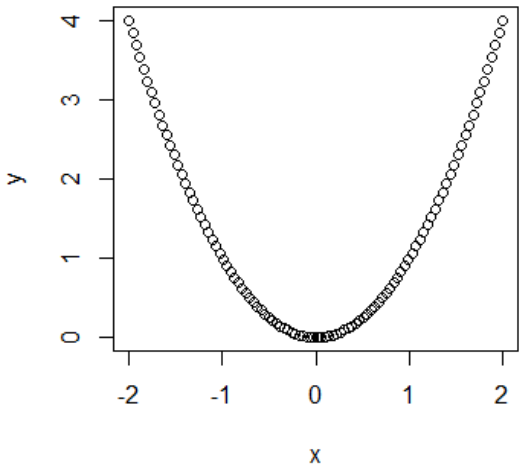

Many options to play with...

```
>   plot(x, y, type="l", lwd = 3, col = "red",
         ylab = "x squared", main = "My plot!")
```

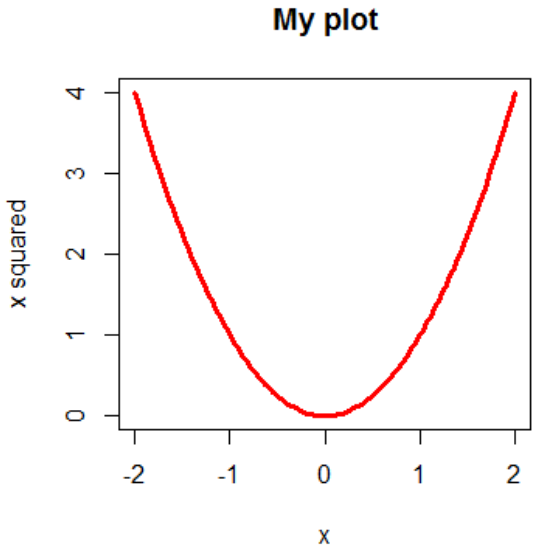

The *pedsuite* packages

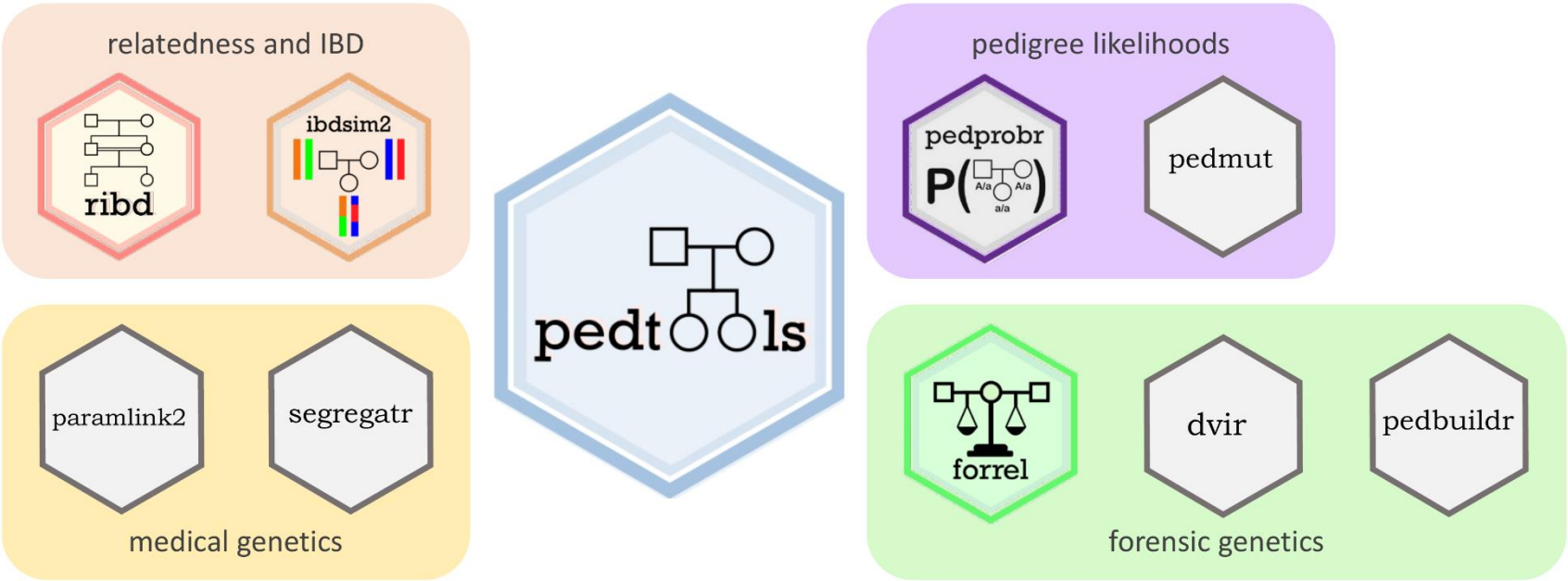

Home page:
https://magnusdv.github.io/pedsuite

Source code available on GitHub:
https://github.com/magnusdv

Your first pedigree

```
>   library(pedsuite)

>   x = nuclearPed()
>   plot(x)
```

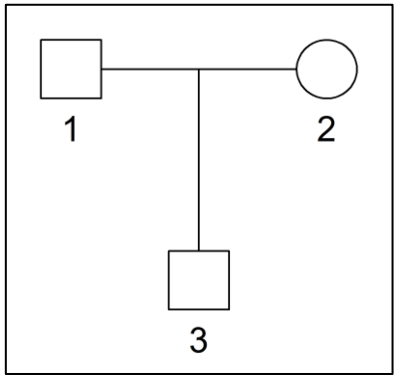

Some useful functions

Create: basic

- singleton
- nuclearPed
- linearPed
- halfSibPed
- cousinPed
- halfCousinPed

Create: complex

- ancestralPed
- doubleCousins
- quadHalfFirstCousins
- fullSibMating
- randomPed

Manipulate

- addSon
- addDaugher
- addParents
- addChildren

- swapSex
- relabel
- removeIndividuals

- branch
- subset

- mergePed
- breakLoops

Member subsets

- founders
- nonfounders
- leaves
- males
- females
- typedMembers
- untypedMembers

Relatives

- father
- mother
- children
- siblings
- grandparents
- spouses

- ancestors
- descendants
- unrelated

Another example

```
> x = cousinPed(2)
> plot(x)
```

Change gender:

```
> x = swapSex(x, 12)
> plot(x)
```

Add inbred child

```
> x = addSon(x, parents = 11:12)
> plot(x)
```

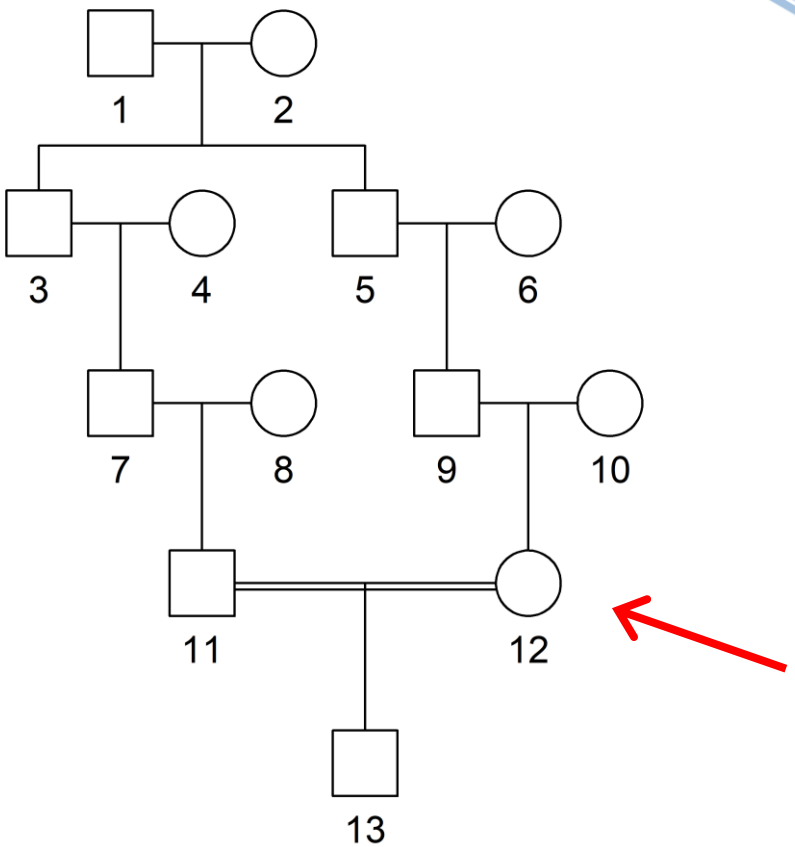

Remember

- Store the result after each change!
- It is OK to use the same name
  (if you don't need the previous object)

Shortcut command for this pedigree

```
> x = cousinPed(2, child = TRUE)
```

The pipe |>

Introduced in R 4.1

Instead of ...

```
>   x = cousinPed(2)
>   x = swapSex(x, 12)
>   x = addSon(x, parents = 11:12)
```

... we can write

```
>   x = cousinPed(2) |>
      swapSex(12) |>
      addSon(parents = 11:12)
```

Feeds the previous result into the next function!

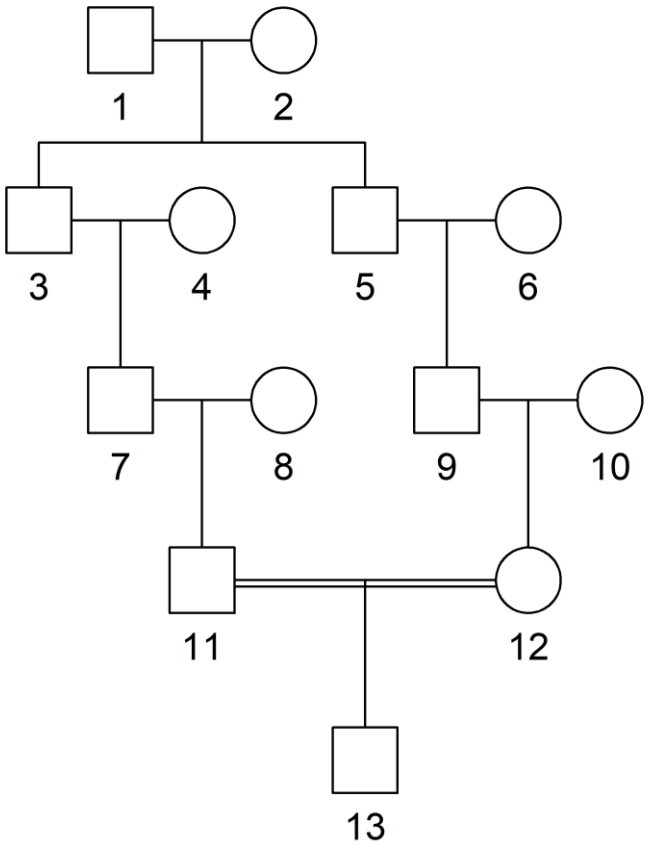

R stuff skipped in this brief introduction

- User-defined functions
- Loops, `apply()`, `lapply()`, etc.
- Basic statistics, linear models + +
- Random numbers
- The "tidyverse" for data science
- ... and LOTS of other things...

Your turn: Exercises!