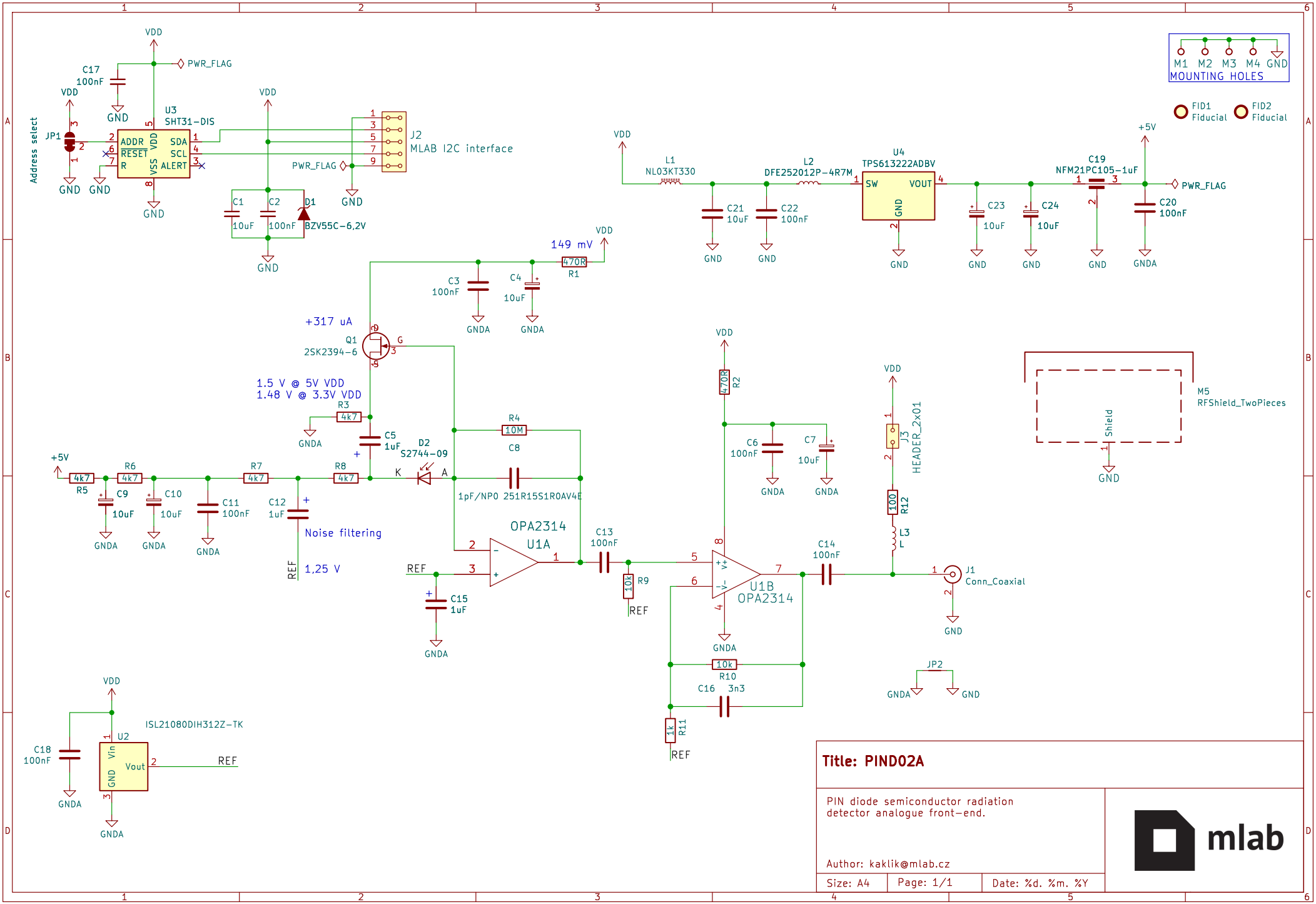

Title: PIND02A

PIN diode semiconductor radiation detector analogue front-end.

Author: kaklik@mlab.cz

Size: A4	Page: 1/1	Date: %d. %m. %Y

mlab