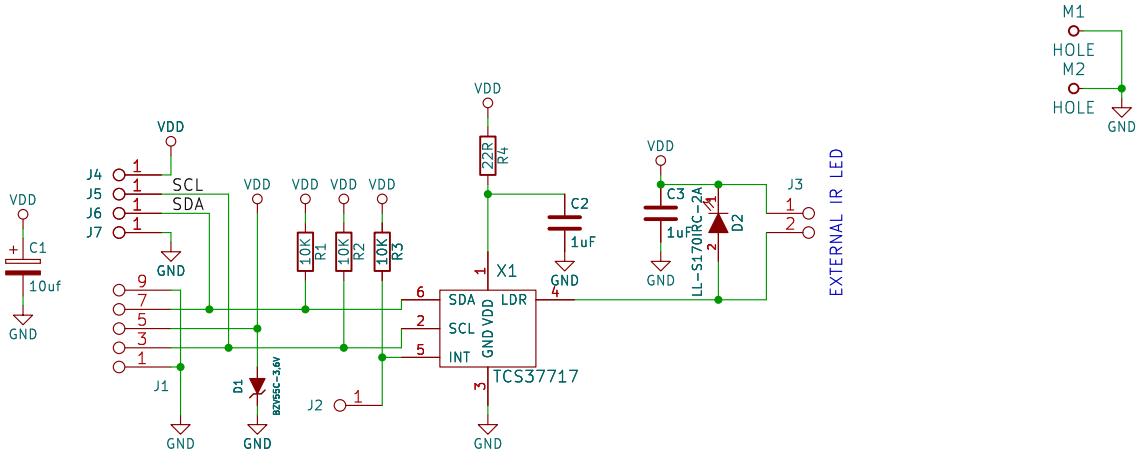

Title: RGBC01

RGB color sensor with I2C interface.

Author:

Size: A4	Page: 1/1	Date: 2023-09-17