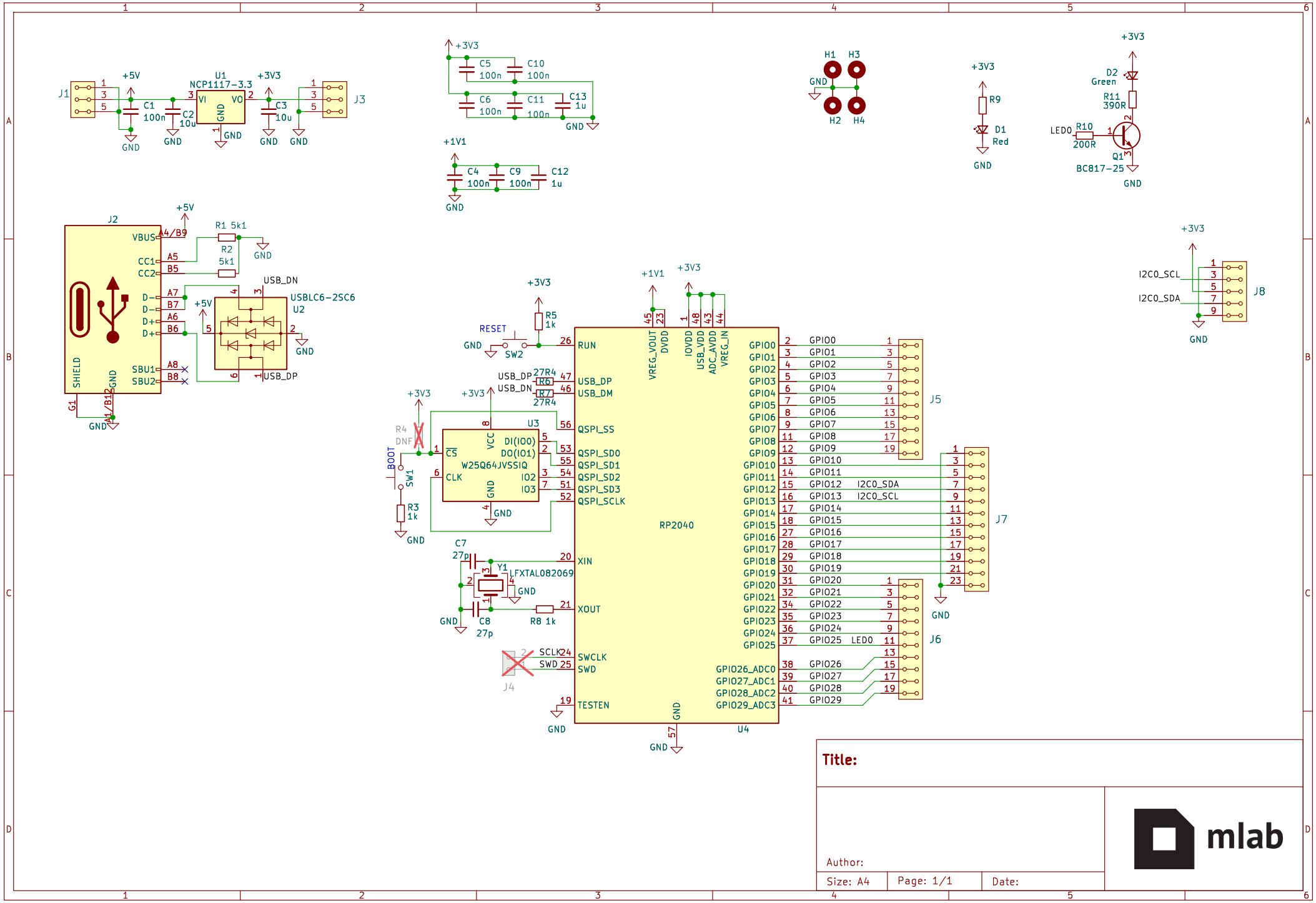

Title:

Author:

Size: A4 | Page: 1/1 | Date:

mlab