# Block diagram

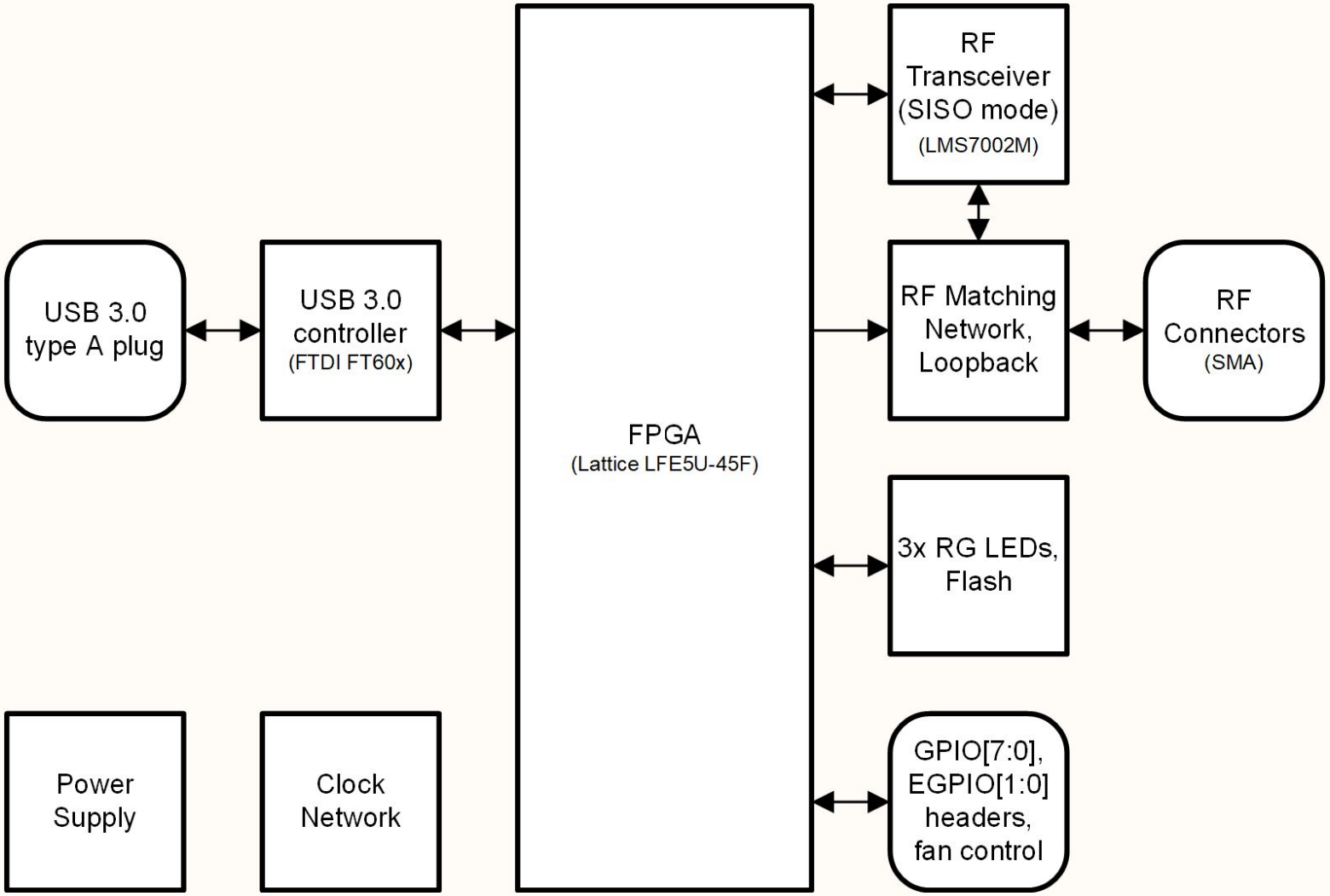


| | | | |
|---|---|---|---|
| Project name: *LimeSDR_Mini_2v0.PrjPcb* | | | |
| Title: *Block diagram* | | *Lime Microsystems*<br>*Surrey Tech Centre*<br>*Guildford GU2 7YG*<br>*Surrey*<br>*United Kingdom* | Lime microsystems |
| Size: A4 | Revision: v2.0 | | |
| Date: 2021-12-01 | Time: 10:49:25 | Sheet1 of 10 | |
| File: 01_Block_Diagram.SchDoc | | | |

# Power diagram

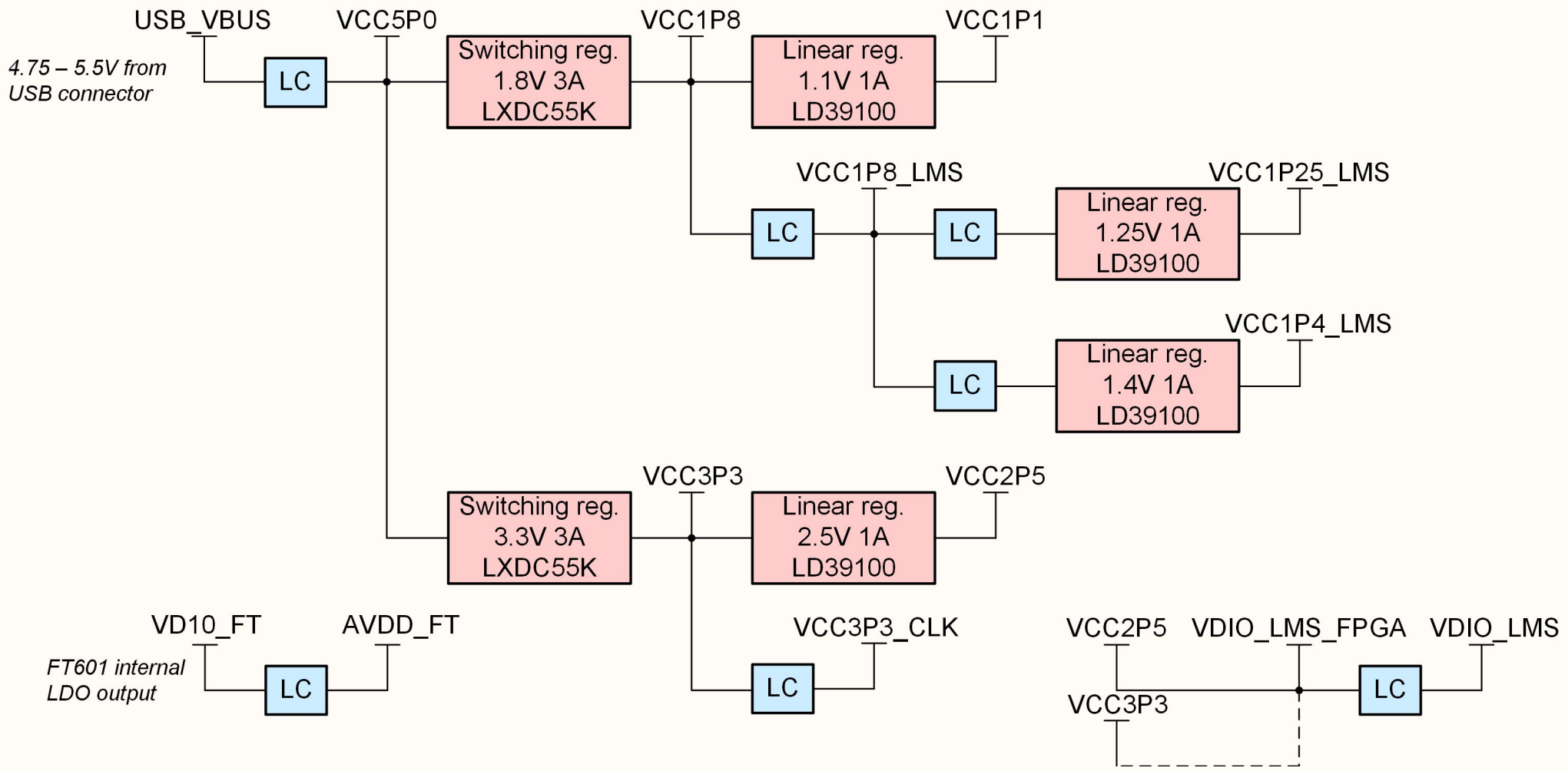


| | | | |
|---|---|---|---|
| Project name: *LimeSDR_Mini_2v0.PrjPcb* | | | |
| Title: *Power diagram* | | *Lime Microsystems*<br>*Surrey Tech Centre*<br>*Guildford GU2 7YG*<br>*Surrey*<br>*United Kingdom* | Lime microsystems |
| Size: A4 | Revision: v2.0 | | |
| Date: 2021-12-01 | Time: 10:49:26 | Sheet2 of 10 | |
| File: 02_Power_Diagram.SchDoc | | | |

# Clock diagram

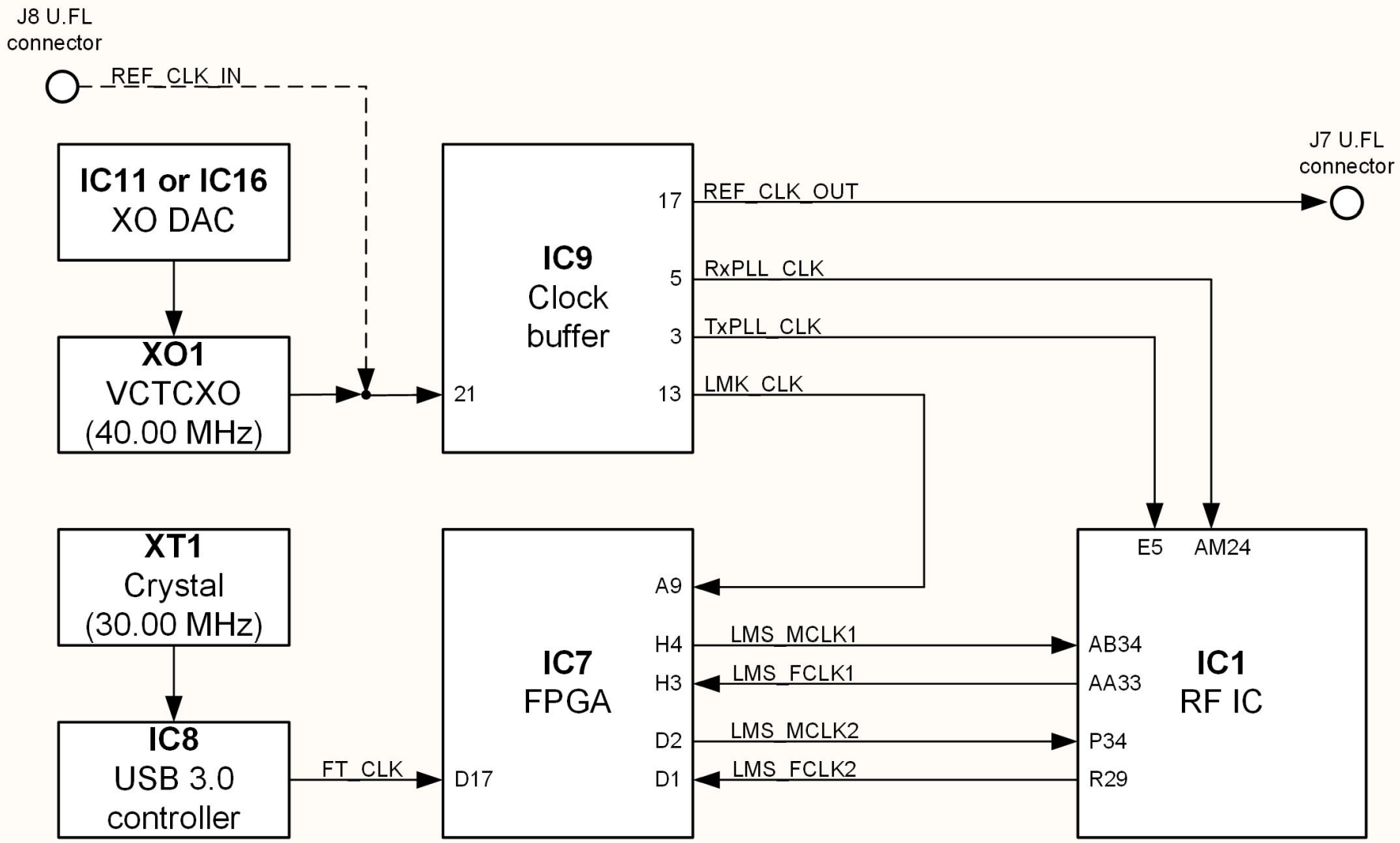


| | | | |
|---|---|---|---|
| Project name: *LimeSDR_Mini_2v0.PrjPcb* | | | |
| Title: *Clock diagram* | | *Lime Microsystems*<br>*Surrey Tech Centre*<br>*Guildford GU2 7YG*<br>*Surrey*<br>*United Kingdom* | Lime microsystems |
| Size: A4 | Revision: v2.0 | | |
| Date: 2021-12-01 | Time: 10:49:29 | Sheet3 of 10 | |
| File: 03_Clock_Diagram.SchDoc | | | |

# RF diagram

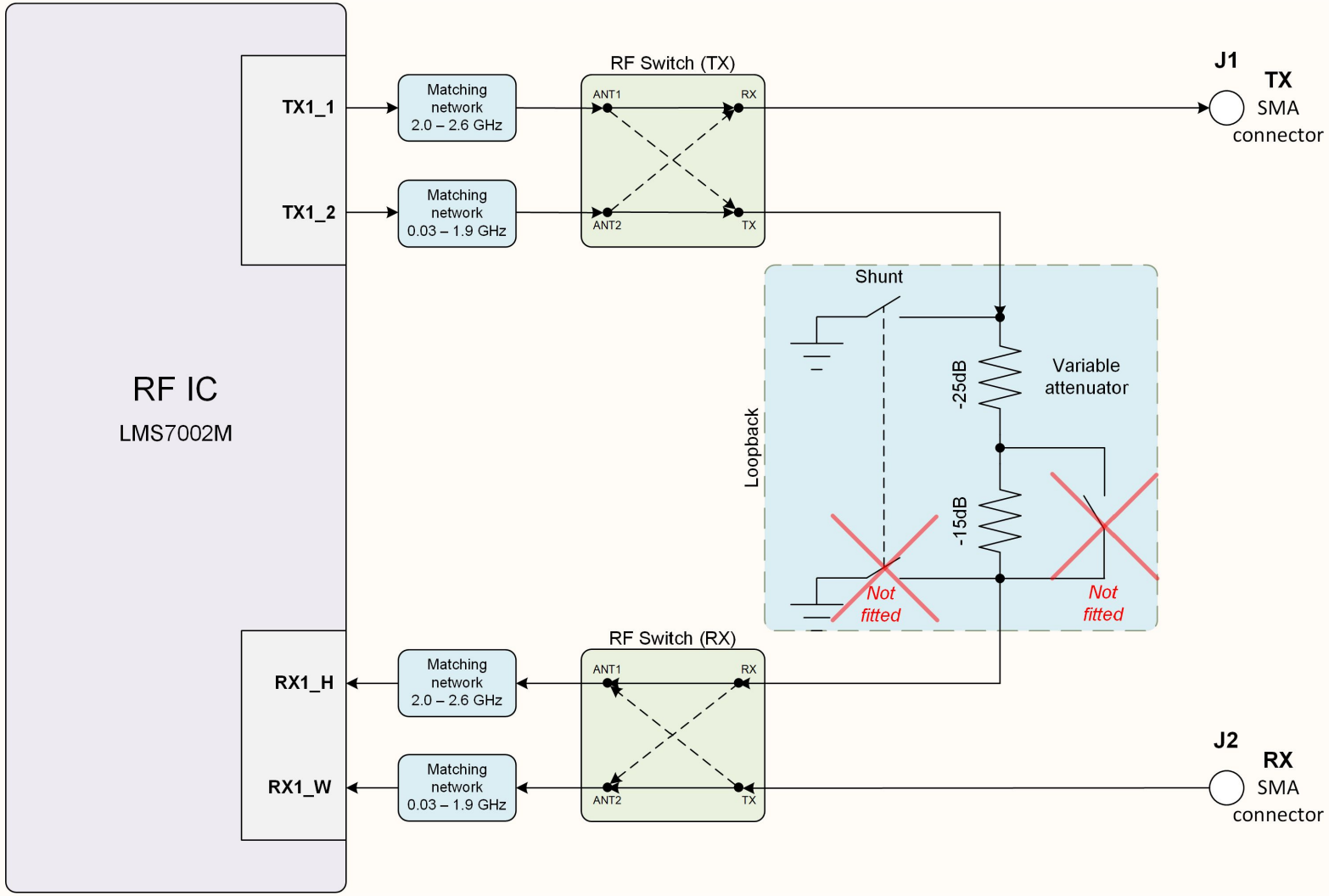


| | | | |
|---|---|---|---|
| Project name: *LimeSDR_Mini_2v0.PrjPcb* | | | |
| Title: *RF diagram* | | *Lime Microsystems*<br>*Surrey Tech Centre*<br>*Guildford GU2 7YG*<br>*Surrey*<br>*United Kingdom* | Lime microsystems |
| Size: A4 | Revision: v2.0 | | |
| Date: 2021-12-01 | Time: 10:49:31 | Sheet4 of 10 | |
| File: 04_RF_Diagram.SchDoc | | | |

NF elements on sheet: IC2, MECH1-MECH11, FAN1
Number of NF elements on sheet: 13

# LMS7002M misc

## LMS7002M digital circuit

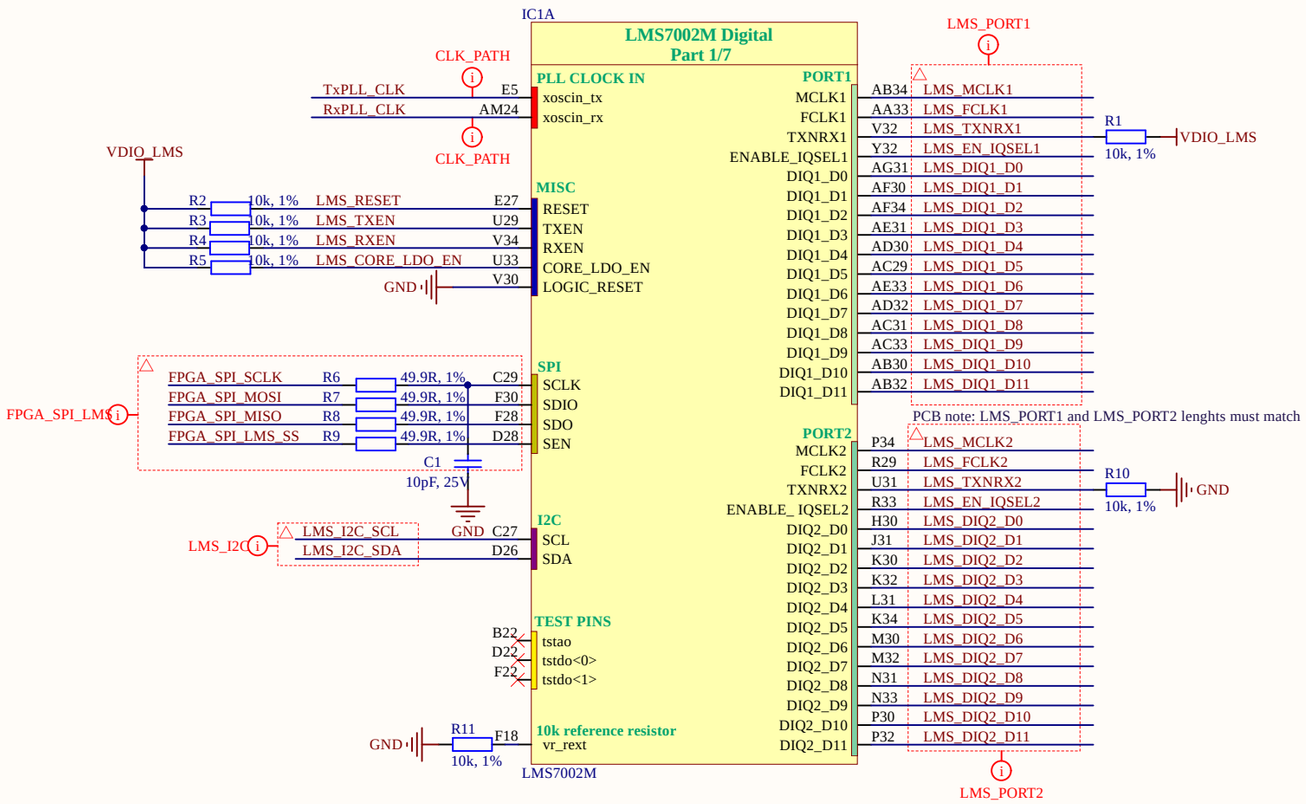


## Baseband external IO

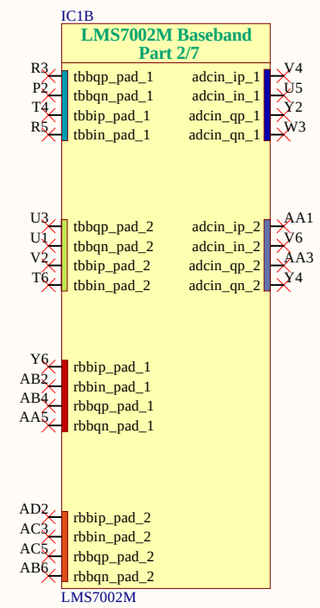


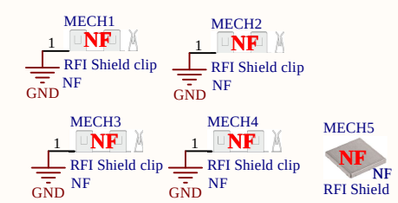


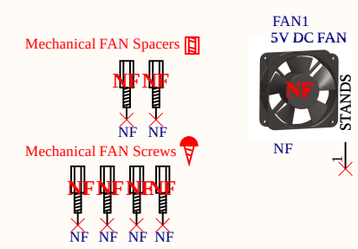


## LMS EEPROM

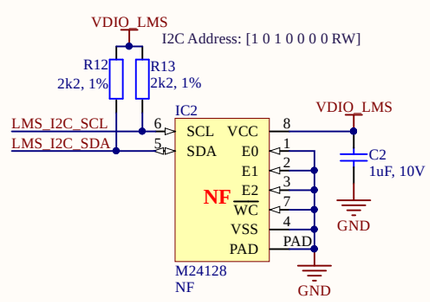


Local fiducial LMS Top

FL1

| | | | |
|---|---|---|---|
| Project name: *LimeSDR_Mini_2v0.PrjPcb* | | | |
| Title: *LMS7002M misc* | | *Lime Microsystems*<br>*Surrey Tech Centre*<br>*Guildford GU2 7YG*<br>*Surrey*<br>*United Kingdom* | Lime microsystems |
| Size: A3 | Revision: v2.0 | | |
| Date: 2021-12-01 | Time: 10:49:33 | Sheet5 of 10 | |
| File: 05_LMS7002M_Misc.SchDoc | | | |

NF elements on sheet: R14, R15, C6, C7, MN3, ESD1, MN5, C19, R17, R19, VT1, R16, VT2, R24, C20, MN13, R20, R21, C21, C22, MN17, ESD2, MN18, MN22
Number of NF elements on sheet: 24

# LMS7002M RF circuits

## LMS RF Channel 1

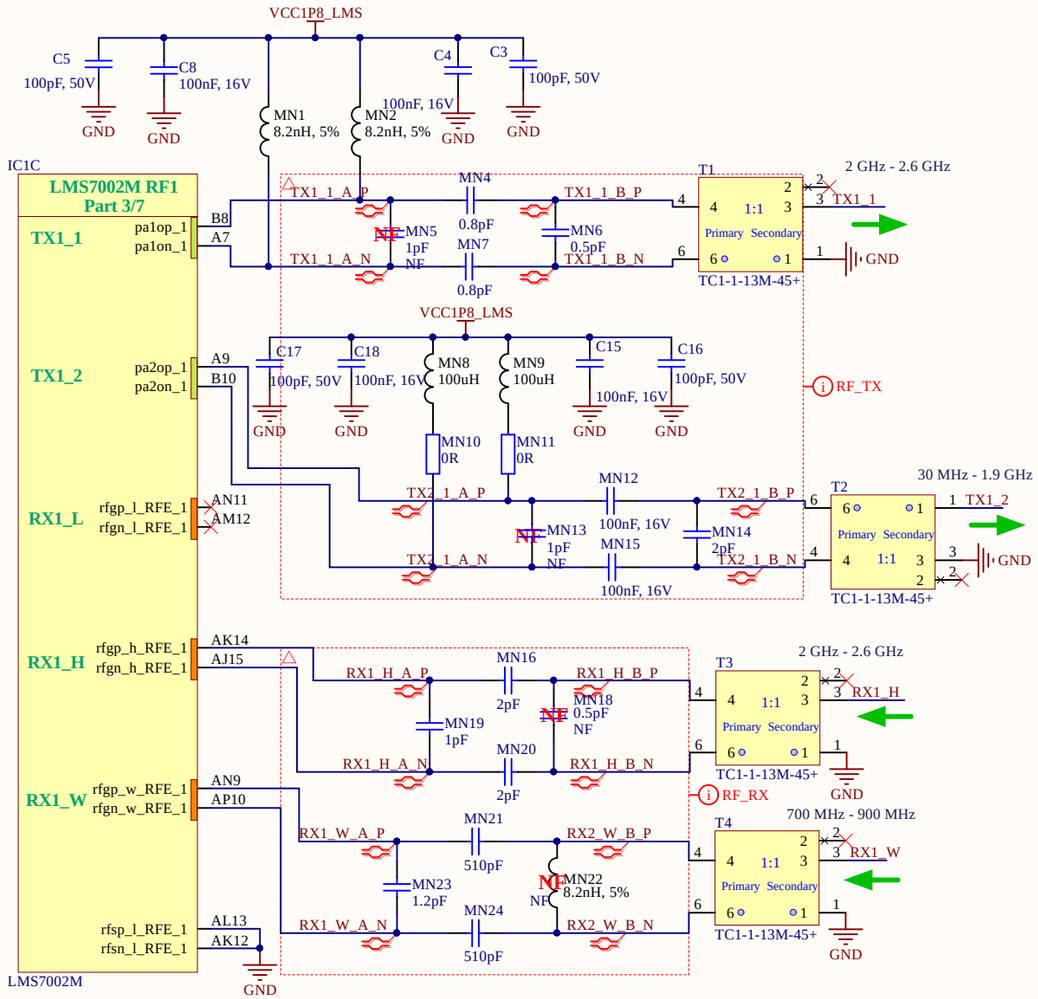


## RF control

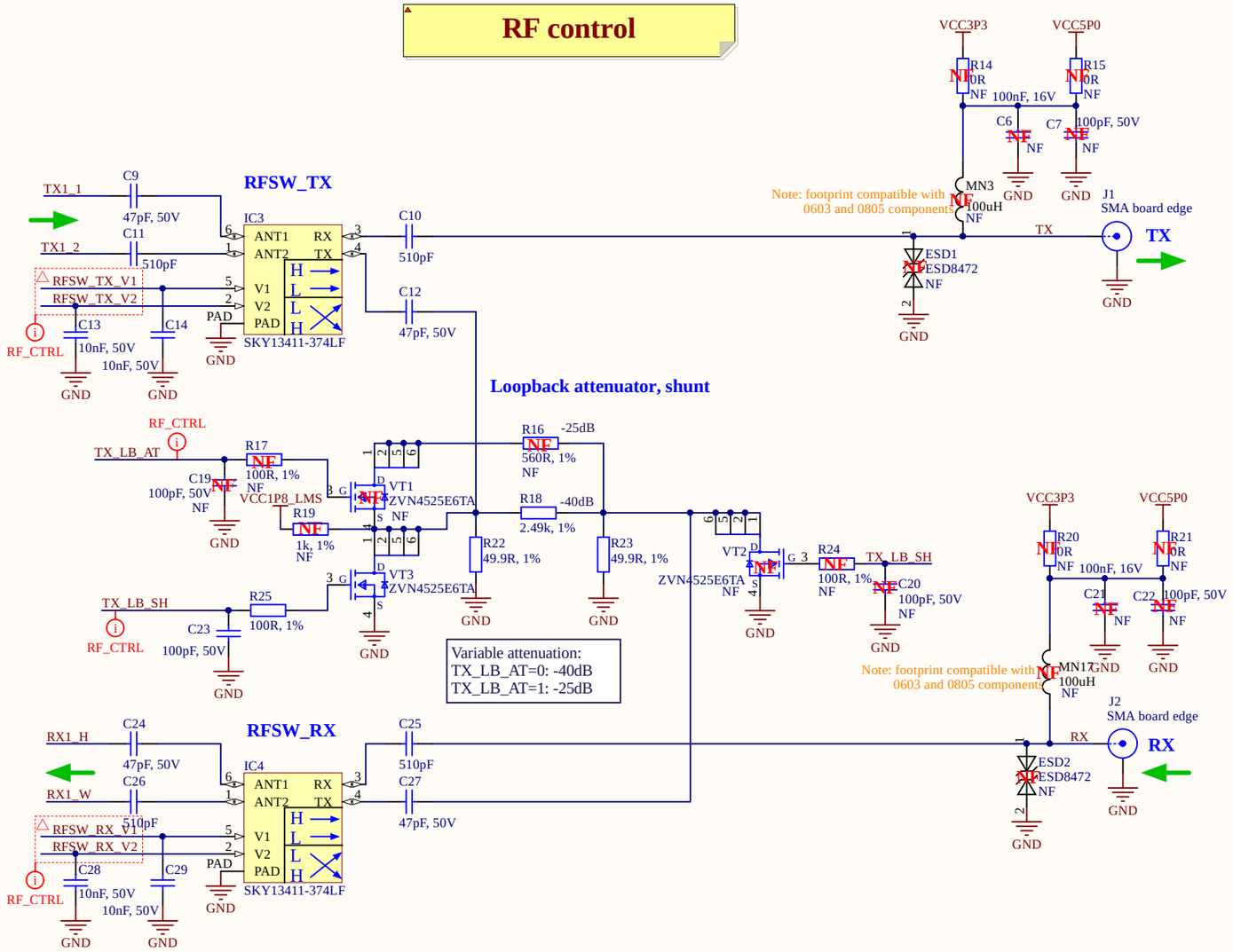


### RF truth table

| RFSW_TX V1 | RFSW_TX V2 | RFSW_RX V1 | RFSW_RX V2 | J1 (TX) | J2 (RX) | Loopback |
|---|---|---|---|---|---|---|
| H | L | H | L | TX1_1 | RX1_H | TX1_2 → RX1_W |
| L | H | H | L | TX1_2 | RX1_H | TX1_1 → RX1_W |
| H | L | L | H | TX1_1 | RX1_W | TX1_2 → RX1_H |
| L | H | L | H | TX1_2 | RX1_W | TX1_1 → RX1_H |

### RFSW (SKY13411) truth table

| V1 | V2 | ANT1 (pin 6) → TX (pin 4) | ANT1 (pin 6) → RX (pin 3) | ANT2 (pin 1) → TX (pin 4) | ANT2 (pin 1) → RX (pin 3) |
|---|---|---|---|---|---|
| H | L | ISOLATION | ON | ON | ISOLATION |
| L | H | ON | ISOLATION | ISOLATION | ON |

## LMS RF Channel 2

Not used

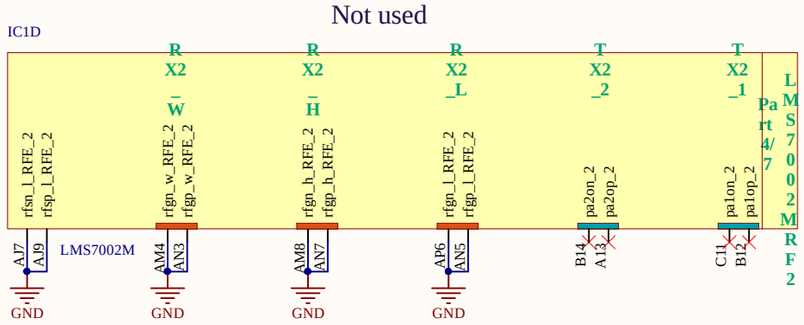


MECH12 RFI Shield clip
MECH13 RFI Shield clip
MECH14 RFI Shield clip
MECH15 RFI Shield clip
MECH16 RFI Shield

| | |
|---|---|
| Project name: | LimeSDR_Mini_2v0.PrjPcb |
| Title: | LMS7002M RF |
| Size: A3 | Revision: v2.0 |
| Date: 2021-12-01 | Time: 10:49:35 Sheet6 of 10 |
| File: 06_LMS7002M_RF.SchDoc | |

Lime Microsystems
Surrey Tech Centre
Guildford GU2 7YG
Surrey
United Kingdom

NF elements on sheet: R26, C71, C84
Number of NF elements on sheet: 3

# LMS7002M power supply circuit

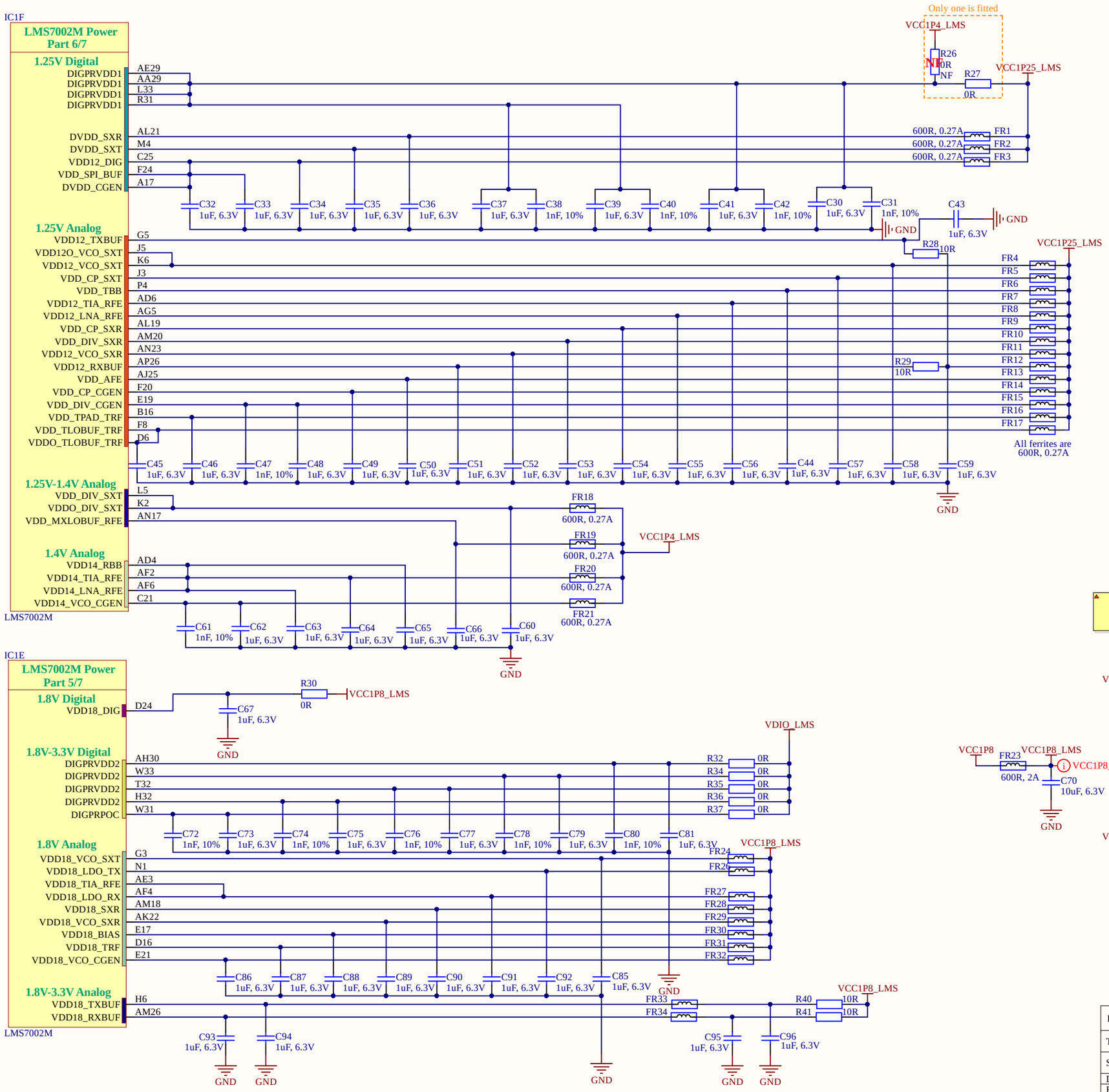


# Linear regulators

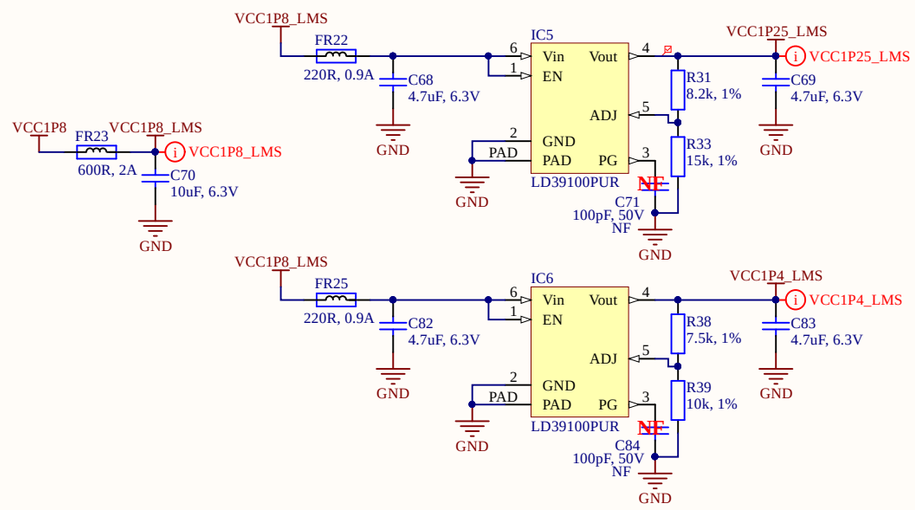


| | | | |
|---|---|---|---|
| Project name: *LimeSDR_Mini_2v0.PrjPcb* | | | |
| Title: *LMS7002M power* | | *Lime Microsystems*<br>*Surrey Tech Centre*<br>*Guildford GU2 7YG*<br>*Surrey*<br>*United Kingdom* | Lime microsystems |
| Size: A3 | Revision: v2.0 | | |
| Date: 2021-12-01 | Time: 10:49:38 | Sheet7 of 10 | |
| File: 07_LMS7002M_Power.SchDoc | | | |

NF elements on sheet: J3, R43, J4, J5
Number of NF elements on sheet: 4

# FPGA

## FPGA Banks

By default LFE5U-45F-xxMG285 is fitted and the schematic symbol represents LFE5U-25F pins. LFE5U-45F and LFE5U-85F parts are footprint and pin compatible with LFE5U-25F with small nuances. For example VCCIO0 bank C10 pin has different function:
LFE5U-25F: C10 pin is PT29B/PCLKC0_0
LFE5U-45F: C10 pin is PT38B/PCLKC0_0
LFE5U-85F: C10 pin is PT65B/PCLKC0_0
Therefore if a different to the default FPGA is used, one should look up the proper function note for each pin.
All power and fixed-function pins are the same for LFE5U-25F, LFE5U-45F, LFE5U-85F parts.

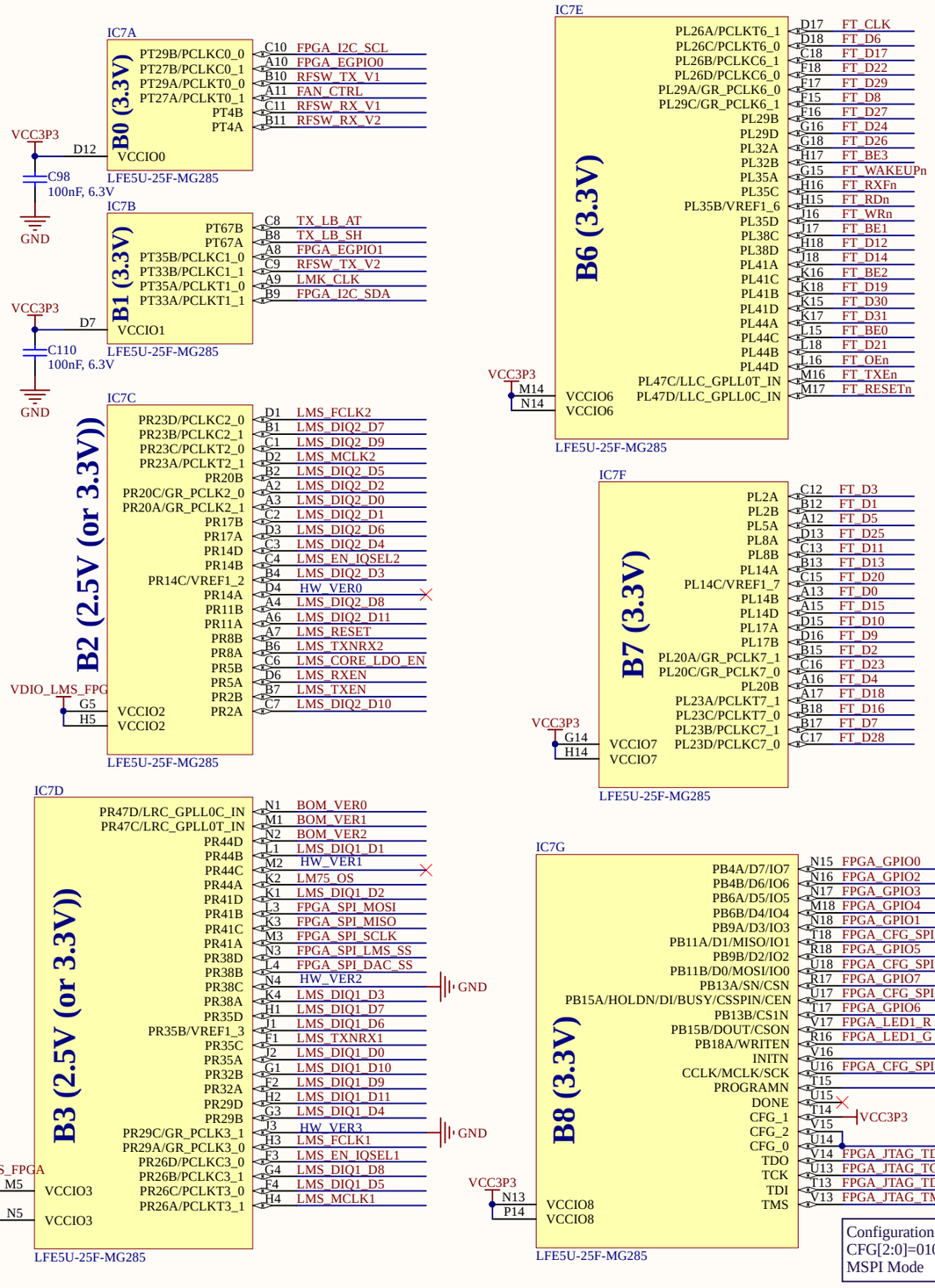


## FPGA GPIO

Pitch: 0.05" (1.27mm)

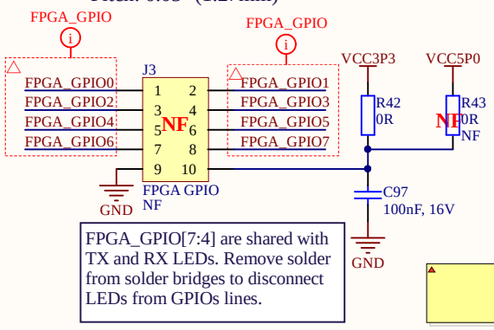


FPGA_GPIO[7:4] are shared with TX and RX LEDs. Remove solder from solder bridges to disconnect LEDs from GPIOs lines.

## FPGA GPIO (edge)

Pitch: 0.1" (2.54mm)

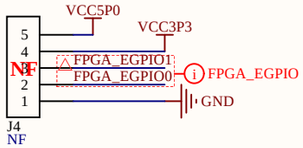


## Decoupling

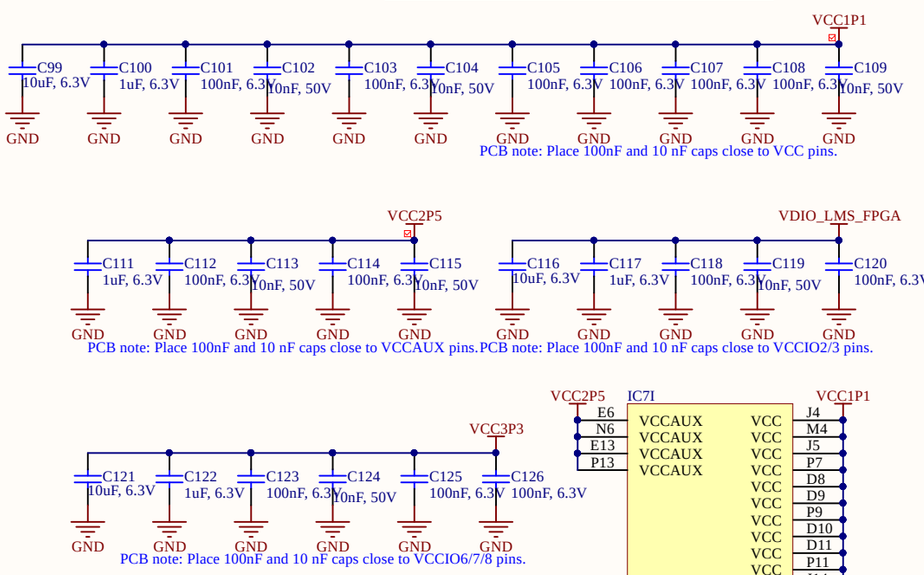


## HW_VER & BOM_VER

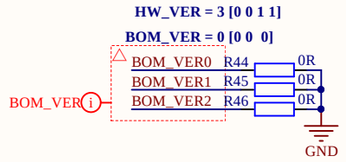


## FPGA JTAG (edge)

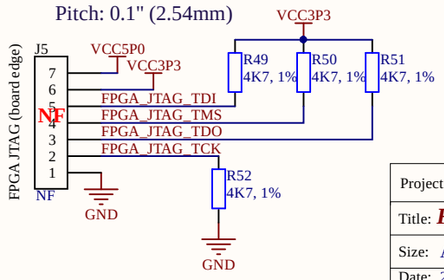


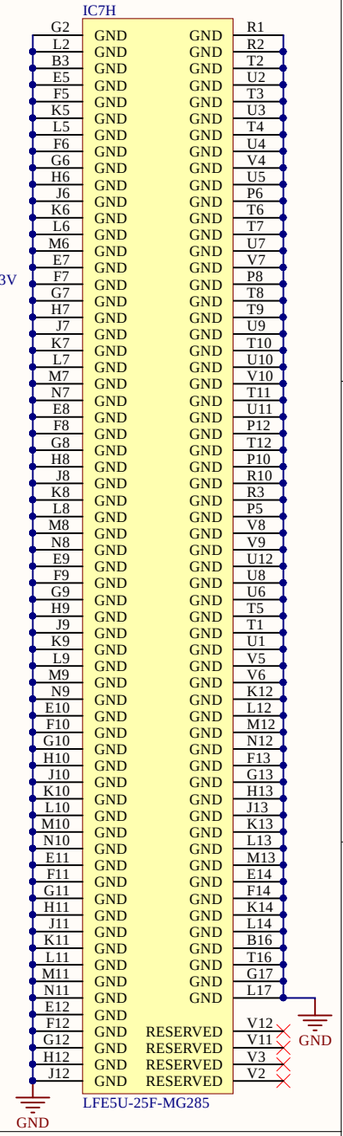


| | | | |
|---|---|---|---|
| Project name: *LimeSDR_Mini_2v0.PrjPcb* | | | |
| Title: *FPGA* | | | *Lime Microsystems Surrey Tech Centre Guildford GU2 7YG Surrey United Kingdom* |
| Size: A3 | Revision: v2.0 | | |
| Date: 2021-12-01 | Time: 10:49:40 | Sheet8 of 10 | |
| File: 08_FPGA.SchDoc | | | |

NF elements on sheet: MECH18-MECH21
Number of NF elements on sheet: 5

# USB 3.0 to FIFO interface

## USB 3.0 type A plug and ESD

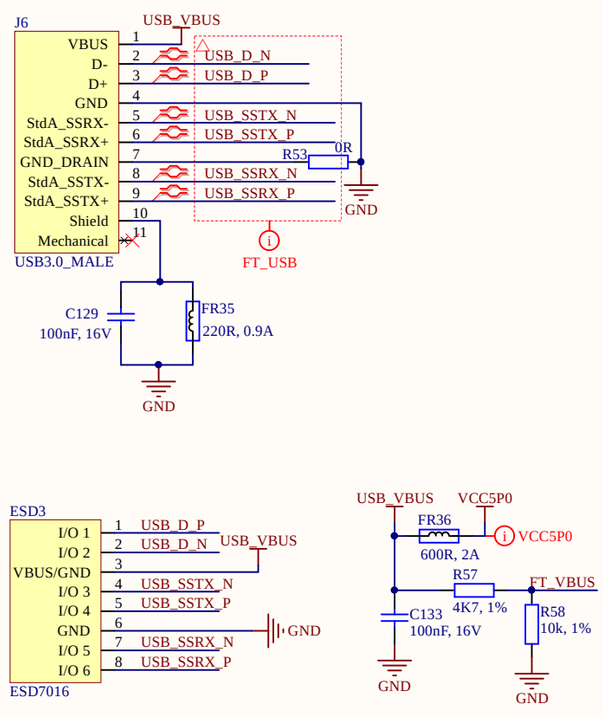


## FTDI digital interface

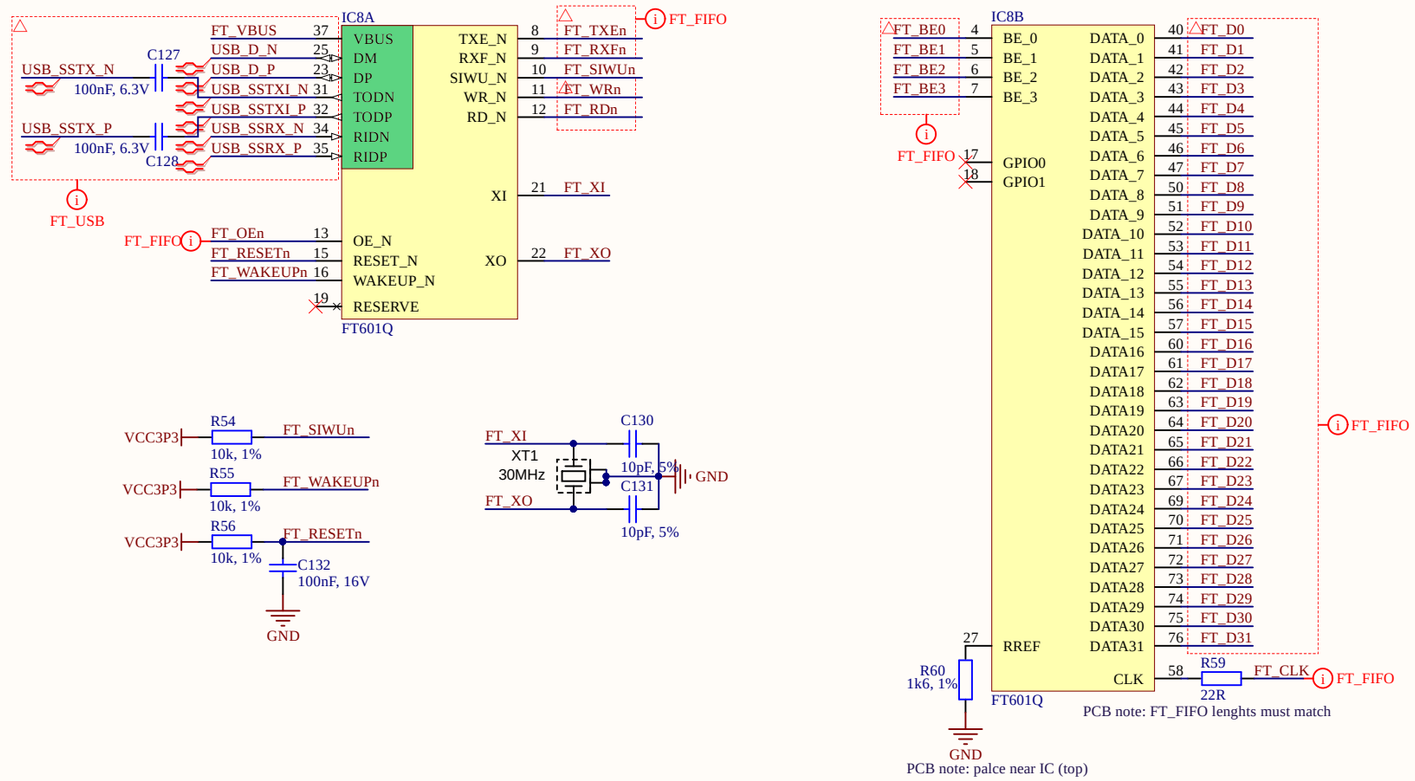


## FTDI Power

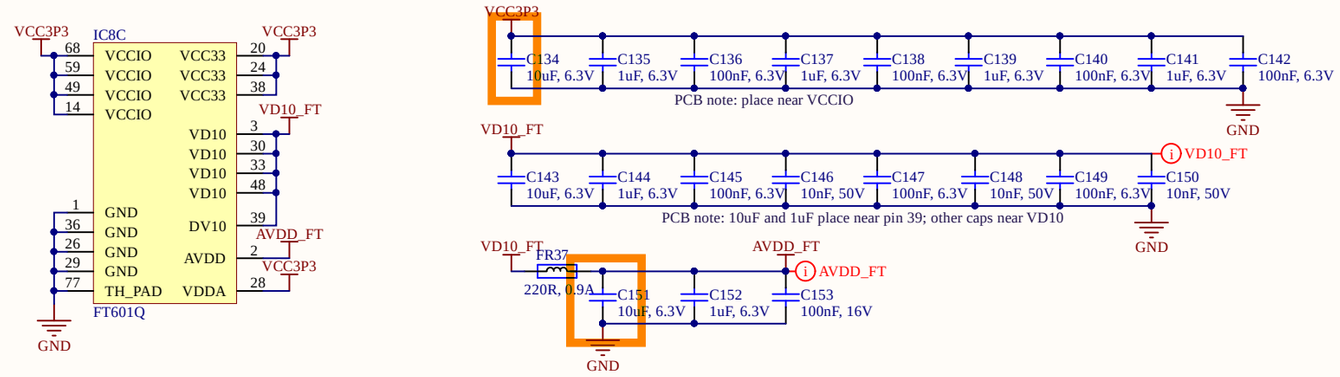


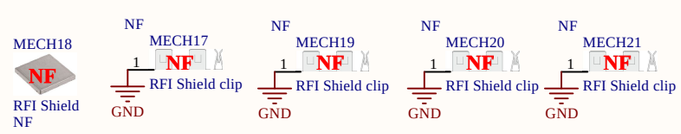


| | | | |
|---|---|---|---|
| Project name: *LimeSDR_Mini_2v0.PrjPcb* | | | |
| Title: *USB3.0 device* | | *Lime Microsystems*<br>*Surrey Tech Centre*<br>*Guildford GU2 7YG*<br>*Surray*<br>*United Kingdom* | Lime microsystems |
| Size: A3 | Revision: v2.0 | | |
| Date: 2021-12-01 | Time: 10:49:42 | Sheet9 of 10 | |
| File: 09_USB3_0_FIFO.SchDoc | | | |

NF elements on sheet: C157, R66, C158, C160, IC12, C174, FR42, R73, C176, R76, R78, R81, C182, C183, IC16, FR43, C187, C185, IC17, C186, R95, J9, R99, R92, C194, R100, C192
Number of NF elements on sheet: 27
Number of NF elements on all sheets: 76
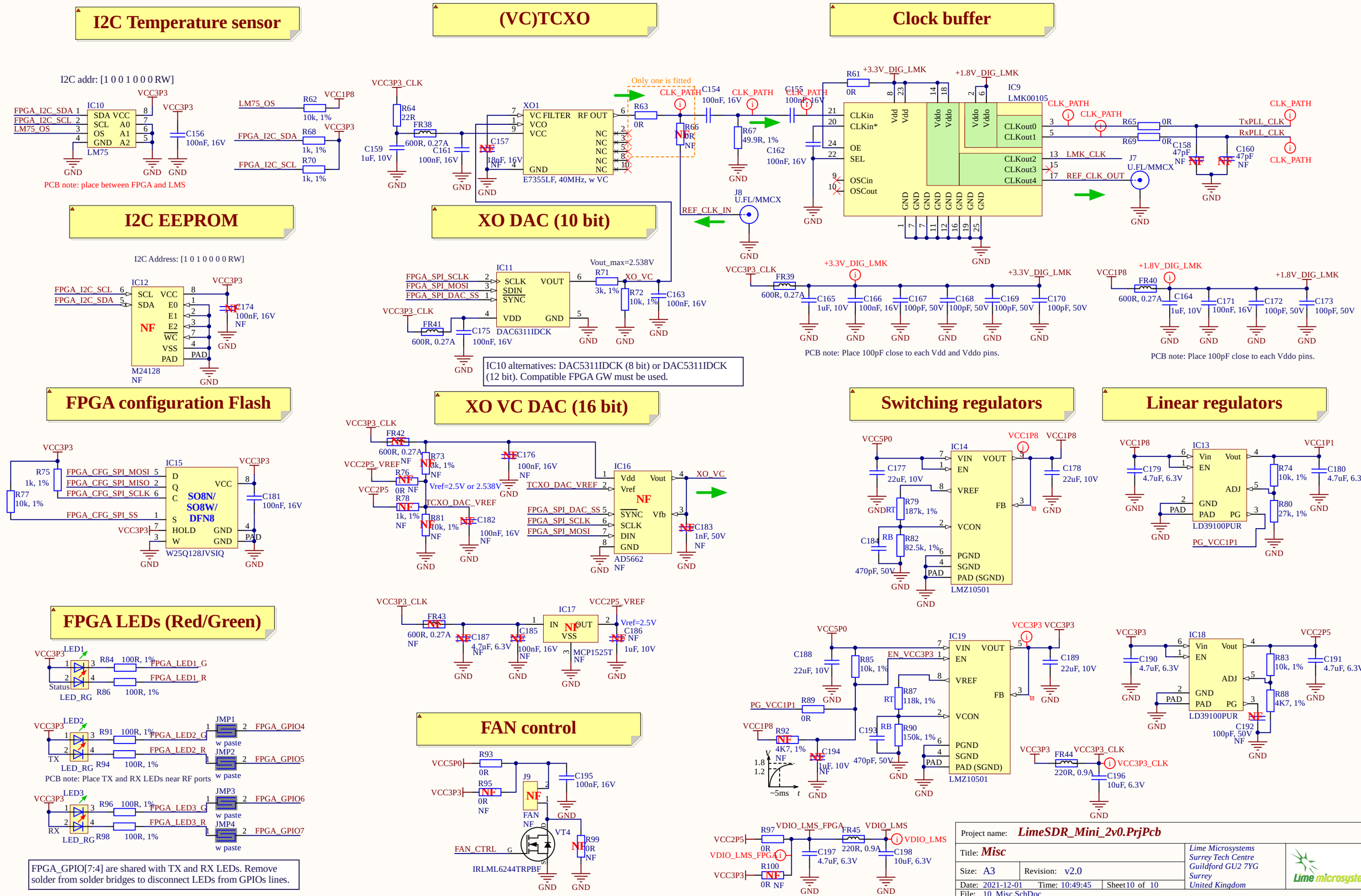
# Misc