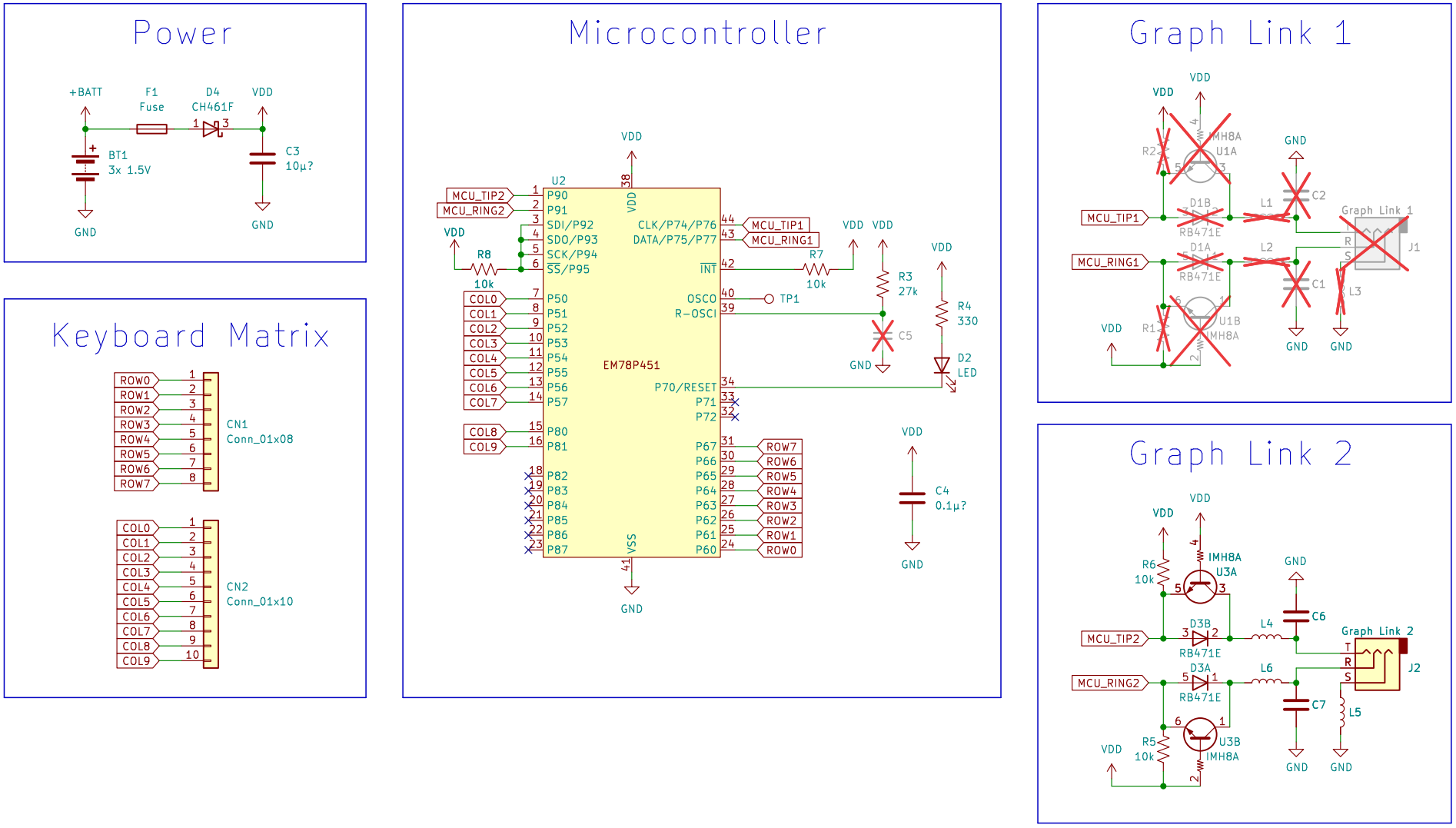

12-00064-00A
SK-6701-QFP

Sheet: /
File: ti_keyboard_silitek.kicad_sch

Title: TI Keyboard "Silitek" PCB

Size: A4	Date: 2023-07-16	Rev: A
KiCad E.D.A. kicad 7.0.6-0		Id: 1/1