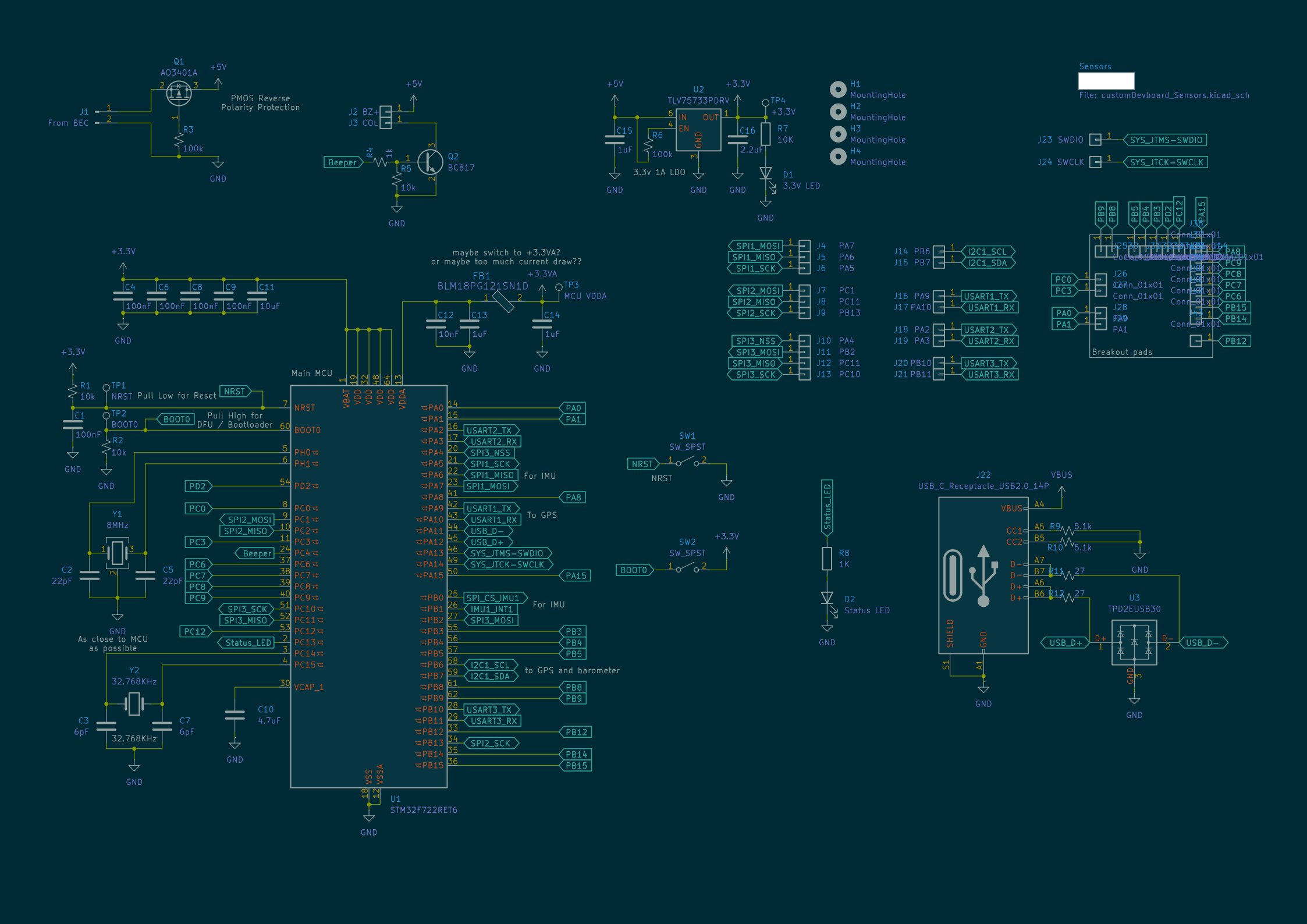
Q1
AO3401A
+5V
PMOS Reverse
Polarity Protection
J1
From BEC
R3
100k
GND
J2 BZ+
J3 COL
Beeper
R4
1k
R5
10k
Q2
BC817
U2
TLV75733PDRV
IN
OUT
EN
GND
C15
1uF
R6
100k
3.3v 1A LDO
C16
2.2uF
TP4
+3.3V
R7
10K
D1
3.3V LED
H1
MountingHole
H2
MountingHole
H3
MountingHole
H4
MountingHole
Sensors
File: customDevboard_Sensors.kicad_sch
J23 SWDIO
SYS_JTMS-SWDIO
J24 SWCLK
SYS_JTCK-SWCLK
C4
C6
C8
C9
C11
100nF
10uF
maybe switch to +3.3VA?
or maybe too much current draw??
FB1
BLM18PG121SN1D
+3.3VA
TP3
MCU VDDA
C12
10nF
C13
1uF
C14
Main MCU
R1
10k
TP1
NRST Pull Low for Reset
C1
TP2
BOOT0
Pull High for
DFU / Bootloader
R2
Y1
8MHz
C2
22pF
C5
Y2
32.768KHz
C3
6pF
C7
C10
4.7uF
As close to MCU
as possible
U1
STM32F722RET6
SPI1_MOSI
SPI1_MISO
SPI1_SCK
SPI2_MOSI
SPI2_MISO
SPI2_SCK
SPI3_NSS
SPI3_MOSI
SPI3_MISO
SPI3_SCK
J4 PA7
J5 PA6
J6 PA5
J7 PC1
J8 PC11
J9 PB13
J10 PA4
J11 PB2
J12 PC11
J13 PC10
J14 PB6
J15 PB7
I2C1_SCL
I2C1_SDA
J16 PA9
J17 PA10
USART1_TX
USART1_RX
J18 PA2
J19 PA3
USART2_TX
USART2_RX
J20 PB10
J21 PB11
USART3_TX
USART3_RX
Breakout pads
SW1
SW_SPST
NRST
SW2
BOOT0
Status_LED
R8
1K
D2
Status LED
J22
USB_C_Receptacle_USB2.0_14P
VBUS
CC1
CC2
R9
5.1k
R10
5.1k
R11
27
R12
27
SHIELD
U3
TPD2EUSB30
USB_D+
USB_D-
For IMU
To GPS
to GPS and barometer

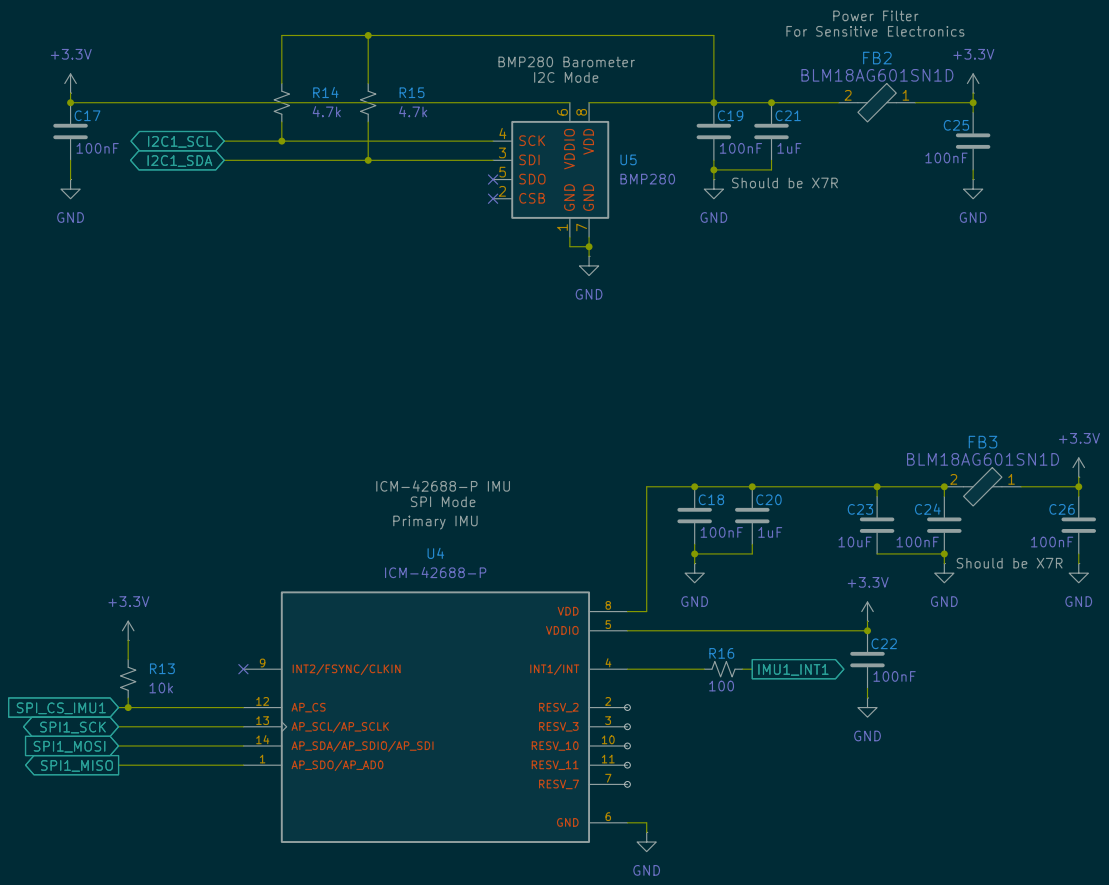
Power Filter
For Sensitive Electronics
BMP280 Barometer
I2C Mode
+3.3V
C17
100nF
GND
R14
4.7k
R15
4.7k
I2C1_SCL
I2C1_SDA
SCK
SDI
SDO
CSB
VDDIO
VDD
GND
GND
U5
BMP280
C19
100nF
C21
1uF
Should be X7R
FB2
BLM18AG601SN1D
+3.3V
C25
100nF
GND
ICM-42688-P IMU
SPI Mode
Primary IMU
U4
ICM-42688-P
FB3
BLM18AG601SN1D
+3.3V
C18
100nF
C20
1uF
C23
10uF
C24
100nF
C26
100nF
Should be X7R
+3.3V
R13
10k
SPI_CS_IMU1
SPI1_SCK
SPI1_MOSI
SPI1_MISO
INT2/FSYNC/CLKIN
AP_CS
AP_SCL/AP_SCLK
AP_SDA/AP_SDIO/AP_SDI
AP_SDO/AP_ADO
VDD
VDDIO
INT1/INT
RESV_2
RESV_3
RESV_10
RESV_11
RESV_7
GND
R16
100
IMU1_INT1
C22
100nF
GND