Power supply

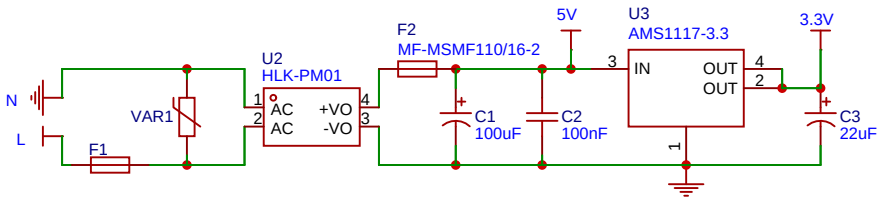

Connectors

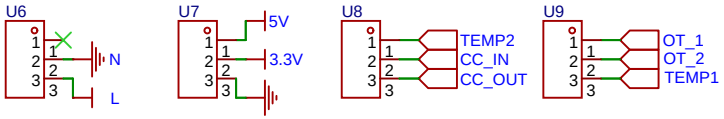

Board A

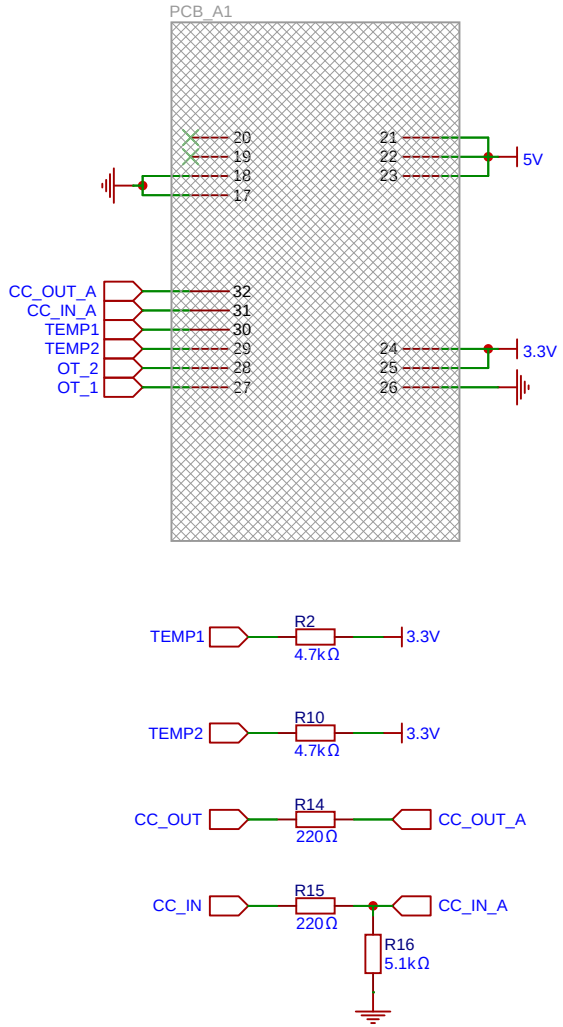

Schematic	otgateway	Update Date	2024-12-17
		Create Date	2024-09-17
Page	Sheet_A	Part Number	
Drawn	Laxilef	OpenTherm Gateway	
Reviewed			
		VER	SIZE
		V1.5.3	A5

PAGE 1 OF 2

EasyEDA

OpenTherm adapter

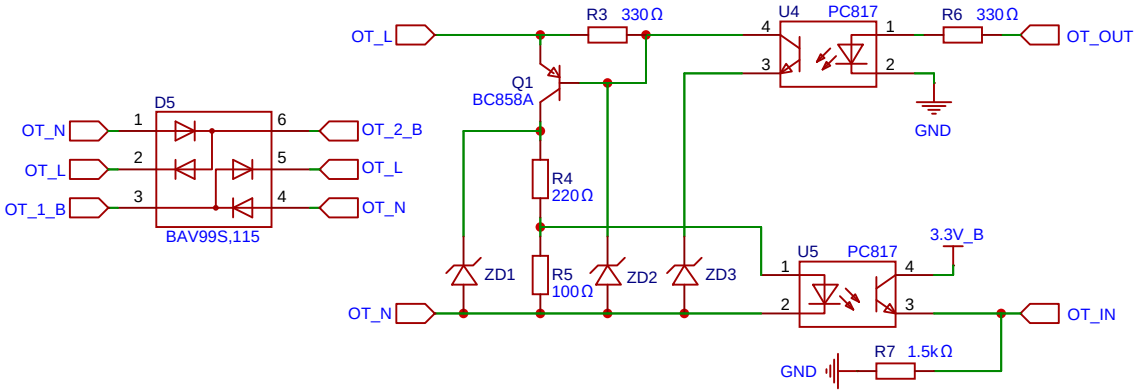

LED's

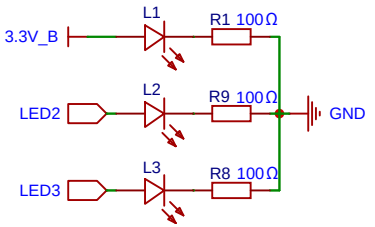

Board B

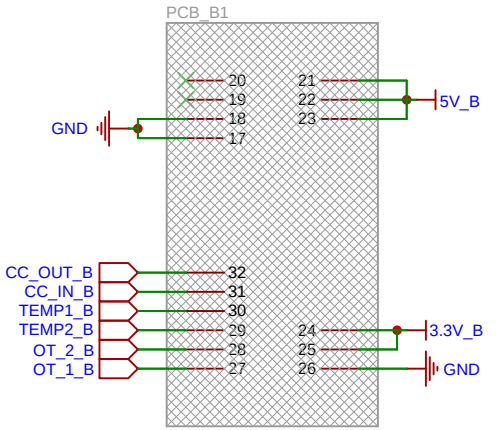

ESP32 S3 WROOM

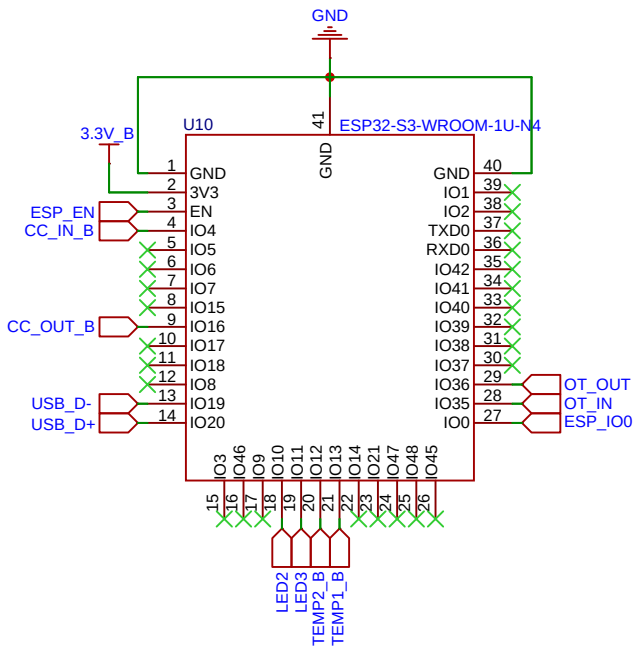

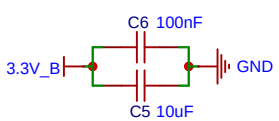

Buttons

Only for ESP32 S3 WROOM

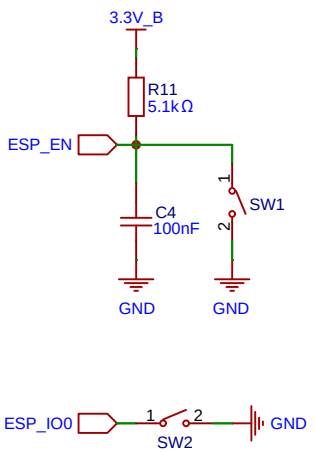

USB

Only for ESP32 S3 WROOM

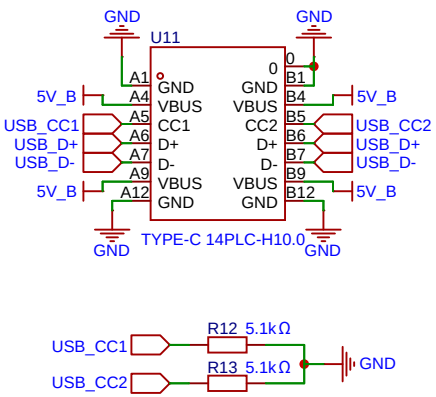

Wemos D1/S2/S3/C3 mini

For Wemos no need mount:
C4, C5, C6, R11, R12, R13, U11, SW1, SW2

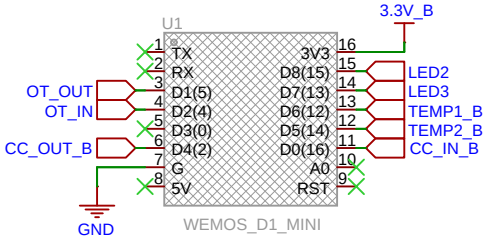

Schematic	otgateway	Update Date	2024-12-17
		Create Date	2024-09-16
Page	Sheet_B	Part Number	
Drawn	Laxilef	OpenTherm Gateway	
Reviewed			
		VER / SIZE / PAGE	V1.5.3 / A4 / PAGE 2 OF 2

EasyEDA