Emergency Hand-Crank Charger and Flashlight

Jude Ziliak | ziliakjude@gmail.com

WESTERN WASHINGTON UNIVERSITY

MAKE WAVES.

Abstract

The Emergency Hand-Crank Charger and Flashlight is designed to provide a small, on-demand source of electricity during power outages. By turning a hand crank, users generate power to charge essential devices or operate an LED flashlight without requiring access to the electrical grid. The crank drives a DC generator, whose variable output is regulated by a synchronous buck converter to deliver stable charge current to a recycled rechargeable battery pack. Power can then be used for the flashlight or supplied to a USB Type-C charging port. A Teensy 4.1 microcontroller manages voltage and current regulation as well as safety features. This project explores the development of a low-cost, efficient, and practical emergency power device.

System Overview

HAND-CRANK DC GENERATOR:

- 3D-printed hand crank drives the shaft of a brushed permanent magnet DC motor
- Integrated planetary gearbox allows for rated output (24V, 375mA) at only 150RPM

SYNCHRONOUS BUCK CONVERTER:

- Uses constant-current (CC) or constant-voltage (CV) control, for the two BMS charging modes
- Teensy performs proportional-integral (PI) compensation and delivers a 300kHz pulse-width modulation (PWM) control signal to the LM5106 integrated circuit (IC) gate driver
- INA236 IC with precision sense-resistor provides I^2C voltage and current readings to Teensy

BATTERY MANAGEMENT SYSTEM (BMS):

- Uses the BQ2003 IC, which has a fast-charge (0.3A) and trickle-charge (~20mA) mode
- Monitors state-of-charge (SOC) via max cell voltage or –ΔV detection to switch modes

RECHARGEABLE BATTERY:

- 4-cell NiMH battery pack repurposed from RC aircraft to minimize environmental impact
- 2Ah capacity at nominal 4.8V; removes the need for voltage regulation before USB

LOAD (USB AND FLASHLIGHT):

- Toggle switch allows stored energy to be used for either the flashlight or USB charging
- USB voltage requirements are maintained by the Teensy controlling a low-side MOSFET

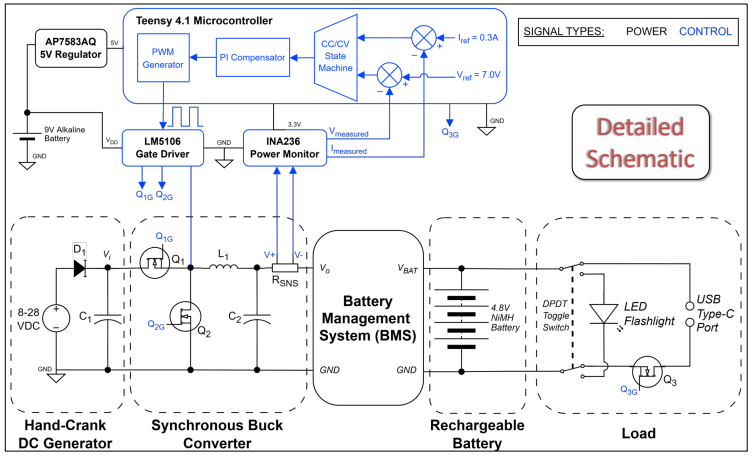

Printed Circuit Board Implementation

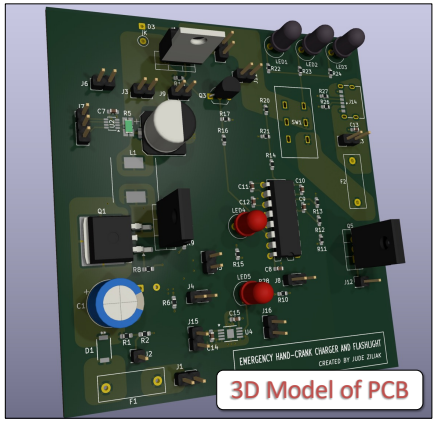

The printed circuit board (PCB) was designed to improve buck converter performance after successful prototyping on a soldering board. Large copper pours in the main power path lower impedance and minimize losses. The switching loop area (which includes Q1, L1, C2, and Q2) is as small as possible to decrease effects of parasitic inductance and capacitance.

PCB testing demonstrated substantial reductions in the unwanted parasitic effects that plagued initial prototypes.

COMPARING PARASITIC MILLER TURN-ON:

- During the Q1 turn-on period, Q2 briefly turns on due to parasitic capacitance
- This causes a shoot through current that sags the input voltage
- Soldering board converter exhibited an input voltage sag of 35%
- PCB converter reduced that input voltage sag to 9%

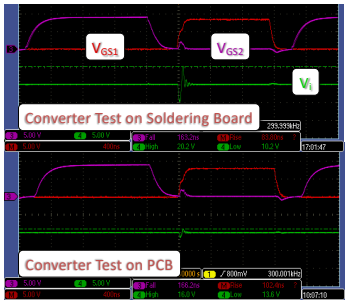

Results

Overall, the individual subsystems are functional and satisfy the project's design requirements. However, more work is necessary to integrate the various subsystems into a fully functional prototype.

POWER CONVERTER TESTING:

When applying the typical operating voltage for the DC generator input (15V), the converter operates at 67% efficiency and successfully delivers a constant 0.3A fast-charge current at its output. The converter also properly transitions to trickle-charge mode, supplying a constant 7.0V at 60% efficiency.

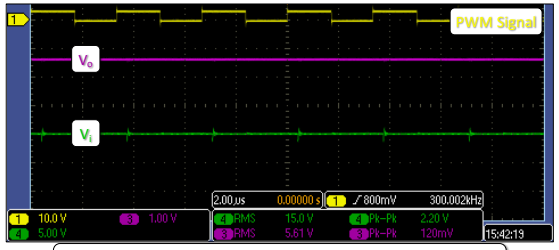

LOAD TESTING:

The LED flashlight is functional and provides steady illumination. More work is required to enable USB charging as the rechargeable battery terminal voltage sags below the USB minimum when supplying over 400mA. Fixing this issue requires a newer battery or redesigning for a higher nominal voltage.

Future Work

Significant progress was made in developing the individual subsystems of this device and there is a clear path forward to completing a fully functional prototype. If this project were to continue, these are the primary areas for improvement:

- Accommodate for rapidly fluctuating generator voltage by improving control system response time (apply feed-forward technique, increase measurement speed, etc.)
- Redesign for a 6V battery with load regulation
- Add a free-spinning handle that improves hand-crank ergonomics for smoother rotation and a more stable generator voltage
- Develop user-friendly case

Acknowledgements

- Professor Xichen Jiang for advising the project
- Reza Afshari and Professor John Lund for supporting project assembly and answering numerous technical questions
- Mato Jacoby and Emma Gossler for hand-crank CAD modelling and 3D-printing support
- Maddie Hahn for graphic design contributions

Capstone Project – Spring 2026

Department of Electrical and Computer Engineering